1. Agenda

   Documents:

   2022-08-02 PLANNING COMMISSION - PUBLIC AGENDA-1735.PDF

2. Meeting Materials

   Documents:

   2022-08-02 PLANNING COMMISSION - FULL AGENDA-1735.PDF

AGENDA

Regular Meeting of the
Nichols Hills Planning Commission
Tuesday, August 2, 2022 at 5:30 PM
City Hall, 6407 Avondale Drive
Nichols Hills, OK 73116

If special assistance is needed for this meeting by any person wishing to attend, please contact the City Clerk's office no later than 48 hours prior to the meeting, and such assistance will be provided.

Official action may be taken by the Planning Commission only on items that appear on this Agenda. The Planning Commission may dispose of the business set out on this Agenda by accepting, approving, adopting, rejecting, amending, or postponing action as to each item, as determined by the Planning Commission.

1. Call to Order

2. Roll Call

3. Citizens Desiring to be Heard

   The purpose of this time is to allow members of the public to speak to the Planning Commission on any matter that is not otherwise set for consideration on this Agenda.

4. Minutes

   a. April 5, 2022 Minutes

5. Public Hearings

   Consideration recommendation of adoption, approval, acceptance, rejection, amendment, and/or postponement of the following:

   a. PUBLIC HEARING: An Ordinance amending Section 50 of the Nichols Hills City Code regarding the No-Build vertical envelopes for the E-1 Estate District, the E-2 Urban Estate District, the R-1-75 Single-Family Residential District, and the R-1-60 Single-Family Residential District; repealing all conflicting ordinances or parts of ordinances; providing for severability; and declaring an emergency.

b. PUBLIC HEARING: The issuance of a special permit to AT&T, represented by CRB for Nexius, for the purpose of replacing and/or adding new antennas and other equipment on existing tower located in the 1009 Northwest 75th Street, Nichols Hills, Oklahoma, and entering an agreement with respect to the same.

c. PUBLIC HEARING: The issuance of a special permit to AT&T, represented by CRB for Nexius, for the purpose of replacing and/or adding new antennas and other equipment on existing tower located in the 1800 block of Westminster, Nichols Hills, Oklahoma, and entering an agreement with respect to the same.

d. PUBLIC HEARING: The issuance of a special permit to T-Mobile Central, LLC, represented by Branch Communication, LLC, for the purpose of replacing and/or adding new antennas and other equipment on existing tower located in the 1800 block of Westminster, Nichols Hills, Oklahoma, and entering an agreement with respect to the same.

6. Adjournment

I certify that the forgoing was filed in the Office of the City Clerk at 3:25 PM on the 28th day of July, 2022 and posted in prominent view on the window at City Hall, 6407 Avondale Drive, at 3:45 PM on the 28th day of July, 2022; posted to the City of Nichols Hills website at http://www.nicholshills.net at 5:00 PM on the 28th of July, 2022; and transmitted by email at 5:00 PM on the 28th day of July, 2022 to those persons who have requested to be included on such notices pursuant to the Open Meeting Act and to those who have requested such notice.

Amanda Copeland

City Clerk
City of Nichols Hills, Oklahoma

AGENDA

Regular Meeting of the
Nichols Hills Planning Commission
Tuesday, August 2, 2022 at 5:30 PM
City Hall, 6407 Avondale Drive
Nichols Hills, OK 73116

If special assistance is needed for this meeting by any person wishing to attend, please contact the City Clerk's office no later than 48 hours prior to the meeting, and such assistance will be provided.

Official action may be taken by the Planning Commission only on items that appear on this Agenda. The Planning Commission may dispose of the business set out on this Agenda by accepting, approving, adopting, rejecting, amending, or postponing action as to each item, as determined by the Planning Commission.

1. Call to Order

2. Roll Call

3. Citizens Desiring to be Heard

   The purpose of this time is to allow members of the public to speak to the Planning Commission on any matter that is not otherwise set for consideration on this Agenda.

4. Minutes

   a. April 5, 2022 Minutes

5. Public Hearings

   Consideration recommendation of adoption, approval, acceptance, rejection, amendment, and/or postponement of the following:

   a. PUBLIC HEARING: An Ordinance amending Section 50 of the Nichols Hills City Code regarding the No-Build vertical envelopes for the E-1 Estate District, the E-2 Urban Estate District, the R-1-75 Single-Family Residential District, and the R-1-60 Single-Family Residential District; repealing all conflicting ordinances or parts of ordinances; providing for severability; and declaring an emergency.

b. PUBLIC HEARING: The issuance of a special permit to AT&T, represented by CRB for Nexius, for the purpose of replacing and/or adding new antennas and other equipment on existing tower located in the 1009 Northwest 75th Street, Nichols Hills, Oklahoma, and entering an agreement with respect to the same.

c. PUBLIC HEARING: The issuance of a special permit to AT&T, represented by CRB for Nexius, for the purpose of replacing and/or adding new antennas and other equipment on existing tower located in the 1800 block of Westminster, Nichols Hills, Oklahoma, and entering an agreement with respect to the same.

d. PUBLIC HEARING: The issuance of a special permit to T-Mobile Central, LLC, represented by Branch Communication, LLC, for the purpose of replacing and/or adding new antennas and other equipment on existing tower located in the 1800 block of Westminster, Nichols Hills, Oklahoma, and entering an agreement with respect to the same.

6. Adjournment

I certify that the forgoing was filed in the Office of the City Clerk at 3:25 PM on the 28th day of July, 2022 and posted in prominent view on the window at City Hall, 6407 Avondale Drive, at 3:45 PM on the 28th day of July, 2022; posted to the City of Nichols Hills website at http://www.nicholshills.net at 5:00 PM on the 28th of July, 2022; and transmitted by email at 5:00 PM on the 28th day of July, 2022 to those persons who have requested to be included on such notices pursuant to the Open Meeting Act and to those who have requested such notice.

Amanda Copeland

City Clerk
City of Nichols Hills, Oklahoma

MINUTES

Regular Meeting of the
Nichols Hills Planning Commission
Tuesday, April 5, 2022 at 5:30 PM
City Hall, 6407 Avondale Drive
Nichols Hills, OK 73116

Original agenda filed in the Office of the City Clerk at 10:46 AM on the 1st day of April, 2022.

1. Call to Order

2. Roll Call

Attendee Name	Title	Status	Arrived
Ron Byrne		Present	
Mike Biddinger		Present	
Doug Franklin		Present	
Tim Cheek		Present	
Barbara Gilbert		Present	
John McCaleb	Chairman	Present	

3. Citizens Desiring to be Heard

   The purpose of this time is to allow members of the public to speak to the Planning Commission on any matter that is not otherwise set for consideration on this Agenda.

   Mr. Ed Holzberger expressed his concerns of the home being built at North Pennsylvania Avenue & Westminster Place. Mr. Holzberger spoke of the lack of privacy in his backyard due to the upstairs patio and the drainage issues of the property.

4. Minutes

   a. January 4, 2022 Minutes

      MOTION: Franklin moved to approve the January 4, 2022 minutes as presented. Biddinger seconded the motion.

Attachment: April 5 2022 Minutes (5949 : April 5, 2022 Minutes)

RESULT:	**APPROVED [UNANIMOUS]**
MOVER:	Doug Franklin
SECONDER:	Mike Biddinger
AYES:	Byrne, Biddinger, Franklin, Cheek, Gilbert, McCaleb

b. January 18, 2022 Special Meeting Minutes

MOTION: Franklin moved to approve the January 18, 2022 minutes as presented. Cheek seconded the motion.

RESULT:	**APPROVED [UNANIMOUS]**
MOVER:	Doug Franklin
SECONDER:	Tim Cheek
AYES:	Byrne, Biddinger, Franklin, Cheek, Gilbert, McCaleb

5. Public Hearings

Consideration of adoption, approval, acceptance, rejection, amendment, and/or postponement of the following:

a. PUBLIC HEARING: A deed combining two lots generally located at 1101 Cumberland Court and 1103 Cumberland Court in Nichols Hills, Oklahoma.

Mr. Tony Say, developer of Cumberland Court, presented the application to the Planning Commission members.

Following discussion among Planning Commission members and staff, Chairman McCaleb opened the Public Hearing.

Seeing no others expressing a desire to be heard, the Public Hearing was closed.

MOTION: Biddinger moved to recommend the City Council approve agenda item 5a as presented. Franklin seconded the motion.

Attachment: April 5 2022 Minutes (5949 : April 5, 2022 Minutes)

RESULT:	**APPROVED [UNANIMOUS]**
MOVER:	Mike Biddinger
SECONDER:	Doug Franklin
AYES:	Byrne, Biddinger, Franklin, Cheek, Gilbert, McCaleb

6. Adjournment

MOTION: There being no further business, Cheek moved to adjourn the meeting. Franklin seconded the motion.

_____
Chairman
Planning Commission
City of Nichols Hills, Oklahoma

_____
City Manager
Planning Commission
City of Nichols Hills, Oklahoma

_____
City Clerk
City of Nichols Hills, Oklahoma

Attachment: April 5 2022 Minutes (5949 : April 5, 2022 Minutes)

Published in _____ on _____ ___, 2022

ORDINANCE NO.

AN ORDINANCE AMENDING CHAPTER 50 OF THE NICHOLS HILLS CITY CODE REGARDING THE NO-BUILD VERTICAL ENVELOPES FOR THE E-1 ESTATE DISTRICT, THE E-2 URBAN ESTATE DISTRICT, THE R-1-75 SINGLE-FAMILY RESIDENTIAL DISTRICT, AND THE R-1-60 SINGLE-FAMILY RESIDENTIAL DISTRICT; REPEALING ALL CONFLICTING ORDINANCES OR PARTS OF ORDINANCES; PROVIDING FOR SEVERABILITY; AND DECLARING AN EMERGENCY.

EMERGENCY ORDINANCE

BE IT ORDAINED BY THE COUNCIL OF THE CITY OF NICHOLS HILLS, OKLAHOMA:

Section 1. Section 50-3 of the Nichols Hills City Code is hereby amended, with new language underlined, to wit:

Sec. 50-3. Definitions.

The following words, terms and phrases, when used in this Chapter, shall have the meanings ascribed to them in this Section, except where the context clearly indicates a different meaning:

*****

No-Build Vertical Envelope means that portion of a building adjacent to the side yard property line where construction is not permitted by the District Regulations applicable for the building. <u>The No-Build Vertical Envelope for each of the E-1 Estate District, the E-2 Urban Estate District, the R-1-75 Single-Family Residential District, and the R-1-60 Single-Family Residential District is set out in the District Regulations applicable to each District.</u>

The following depictions are stricken from Section 50-3:

Attachment: NH- No Build Vertical Envelope Ordinance 5.16.22-2.1 (5950 : Ordinance - No-Build Vertical Envelope)

No Build Vertical Envelope Definition Exhibit

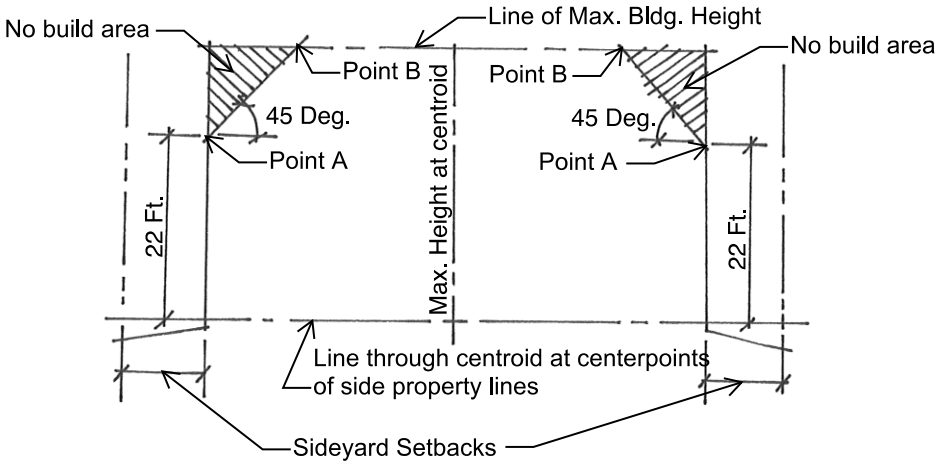

No Build Vertical Envelope

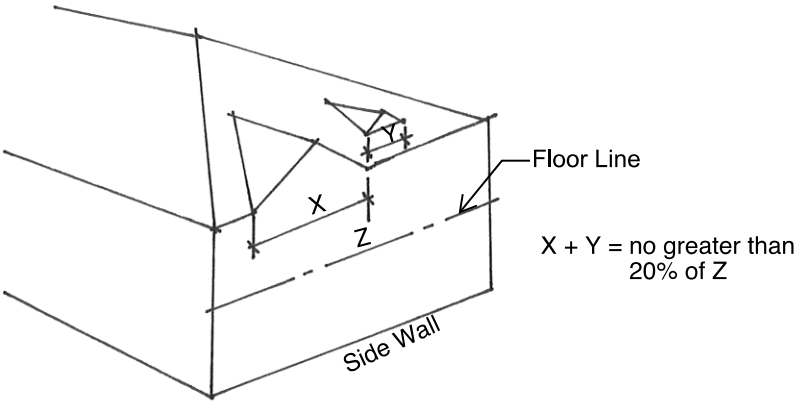

Exception to No Build Vertical Envelope

Attachment: NH- No Build Vertical Envelope Ordinance 5.16.22-2.1 (5950 : Ordinance - No-Build Vertical Envelope)

Section 2. Section 50-47 of the Nichols Hills City Code is hereby amended, with deleted language stricken through and new language underlined, to wit:

Sec. 50-47. E-1 Estate District.

*****

(e) *Development regulations*.

*****

(8) *Maximum building height*. The main building maximum height is 45 feet. The accessory building maximum height is 25 feet.

~~a. Accessory building. 25 feet.~~

~~b. Maximum main building height is determined by creation of a No-Build Vertical Envelope using the side yard setback lines and the following formula:~~

~~1. Establish a parallel line 45 feet above the centroid of the structure that extends from one required side yard setback to the other.~~

~~2. Create a No-Build Vertical Envelope on each side of the structure envelope as follows:~~

~~(i) Begin at the intersection of the 45-foot maximum height plane and the required side yard setback line. Draw a line along the maximum height plane a distance of 22 feet to point "A."~~

~~(ii) From the same point of beginning, draw a vertical line along the side yard setback plane a distance of 23 feet to point "B." This point represents the maximum permitted plate height.~~

~~(iii) Connect points "A" and "B" to delineate a "no-build" triangle-shaped area.~~

~~(iv) On a sidewall or roof section that faces a side yard, a gable or dormers may be added that do not exceed 20 percent of the length of the sidewall measured at finished floor level. The dormer or gable length will be measured at the 22 foot plate height level. Example: a 60-foot long side wall may have a dormer or gable that measures 12 feet long at the 22 foot plate height level.~~

Attachment: NH- No Build Vertical Envelope Ordinance 5.16.22-2.1 (5950 : Ordinance - No-Build Vertical Envelope)

~~c. Maximum side wall plate height to be 25 feet, plus one additional foot of height for each full foo of setback provided in addition to the side yard setback required by this Section.~~

(9) *No-Build Vertical Envelope – Main Building.* No portion of a main building is permitted within the No-Build Vertical Envelope. Each side of a building must have a single step-back No-Build Vertical Envelope, the size and location of which are determined by creating a No-Build Vertical Envelope as follows:

1. Establish a point at the side-yard setback, at the centroid level, then move vertically up 22 feet to point "A."

2. At point "A," a 45-degree angle will be drawn to the point where it intersects a horizontal line drawn at the maximum building height. This point will be point "B."

3. Connect points "A" and "B" to delineate a No-Build Vertical Envelope on each side of the building.

4. On a sidewall or roof section that faces a side yard, a gable or dormers may be added that do not exceed 20 percent of the length of the sidewall measured at finished floor level. The dormer or gable length will be measured at the 22-foot plate height level. Example: a 60-foot-long side wall may have a dormer or gable that measures 12 feet long at the 22-foot plate height level.

The No-Build Vertical Envelope for the E-1 Estate District and the exceptions to it are further depicted as follows:

Attachment: NH- No Build Vertical Envelope Ordinance 5.16.22-2.1 (5950 : Ordinance - No-Build Vertical Envelope)

No Build Vertical Envelope Definition Exhibit

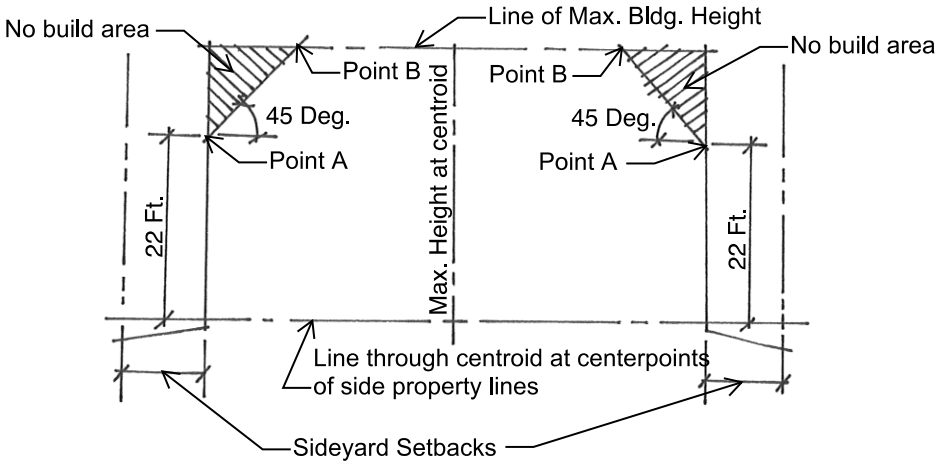

No Build Vertical Envelope

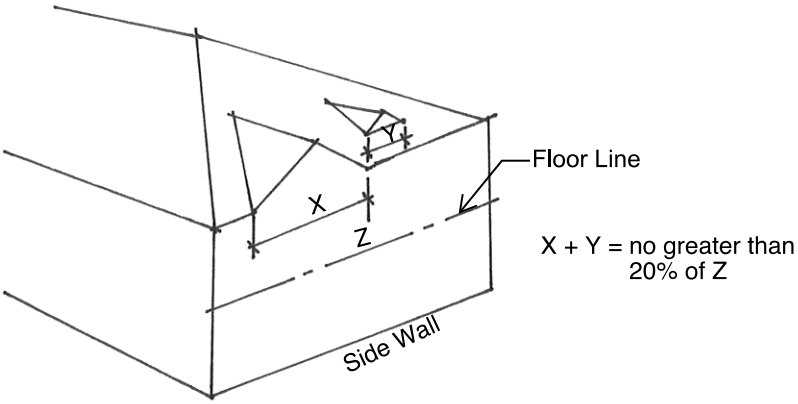

Exception to No Build Vertical Envelope

Attachment: NH- No Build Vertical Envelope Ordinance 5.16.22-2.1 (5950 : Ordinance - No-Build Vertical Envelope)

(10) *No-Build Vertical Envelope – Accessory Building.* No portion of an accessory building is permitted within the No-Build Vertical Envelope created as follows:

1. Establish a point at the side and rear yard setbacks, at the finished floor level, then move vertically up ten feet to point "A."
2. At point "A," a 45-degree angle will be drawn to the point where it intersects with the maximum building height which is point "B."
3. Connect points "A" and "B" to delineate a No-Build Vertical Envelope on every side of the building.

(~~9~~ 11) *Aggregate lots and combined lots with frontage on two non-intersecting streets.* In the case of aggregate lots and combined lots with frontage on two non-intersecting streets composed of a primary lot and a secondary lot, the primary lot being the lot on which a residence fronts, no development whatsoever shall be permitted on the secondary lot other than a separate and distinct single family home which fronts to the street on the frontage of the secondary lot. The prohibition on development on the secondary lot includes, but is not limited to, any accessory buildings, fences, outbuildings, driveways or pathways, additional accessory structures, swimming pools, tennis courts and other similar recreational uses requiring construction of permanent structures for such recreational use. It is the intent of this paragraph that each of the constituent lots, namely the primary lot and the secondary lot, shall retain all separate attributes, restrictions and other requirements for development under the Nichols Hills City Code despite the single ownership of the constituent lots.

(~~10~~ 12) *Perimeter fences and walls.* Perimeter fences and walls shall be subject to provisions of Chapter 8.

Attachment: NH- No Build Vertical Envelope Ordinance 5.16.22-2.1 (5950 : Ordinance - No-Build Vertical Envelope)

Section 3. Section 50-48 of the Nichols Hills City Code is hereby amended, with deleted language stricken through and new language underlined, to wit:

Sec. 50-48. E-2 Urban Estate District.

*****

(e) *Development regulations*.

*****

(8) *Maximum building height*. The main building maximum height is 45 feet. The accessory building maximum height is 25 feet.

~~a. Accessory building. 25 feet.~~

~~b. Maximum main building height is determined by creation of a No-Build Vertical Envelope using the side yard setback lines and the following formula:~~

~~1. Establish a parallel line 35 feet above the centroid of the structure that extends from one required side yard setback to the other.~~

~~2. Create a No-Build Vertical Envelope on each side of the structure envelope as follows:~~

~~(i) Begin at the intersection of the 35-foot maximum height plane and the required side yard setback line. Draw a line along the maximum height plane a distance of 12 feet to point "A."~~

~~(ii) From the same point of beginning, draw a vertical line along the side yard setback plane a distance of 13 feet to point "B." This point represents the maximum permitted plate height.~~

~~(iii) Connect points "A" and "B" to delineate a "no-build" triangle-shaped area.~~

~~(iv) On a sidewall or roof section that faces a side yard, a gable or dormers may be added that do not exceed 20 percent of the length of the sidewall measured at finished floor level. The dormer or gable length will be measured at the 22 foot plate height level. Example: a 60-foot long side wall may~~

Attachment: NH- No Build Vertical Envelope Ordinance 5.16.22-2.1 (5950 : Ordinance - No-Build Vertical Envelope)

~~have a dormer or gable that measures 12 feet long at the 22 foot plate height level.~~

~~c. Maximum side wall plate height to be 25 feet, plus one additional foot of height for each full foo of setback provided in addition to the side yard setback required by this Section.~~

(9) *No-Build Vertical Envelope – Main Building.*

a. *No-Build Vertical Envelope when the side-yard setback is less than 20 feet.* No portion of a main building is permitted within the No-Build Vertical Envelope. Any side-yard setback that is less than 20 feet from a side property line must have a double step-back No-Build Vertical Envelope, the size and location of which are determined by creating a No-Build Vertical Envelope as follows:

1. Establish a point at the side-yard setback, at the centroid level, then move vertically up 12 feet to point "A."

2. At point "A," a 45-degree angle will be drawn to the point where it intersects a vertical line offset from the side yard setback a distance of six feet. This point will be point "B."

3. From point "B," extend vertically four feet. This point will be point "C."

4. At point "C," a 45-degree angle will be drawn to the point where it intersects with the maximum building height, which will be point "D."

5. Connect points "A," "B," "C," and "D" to delineate a No-Build Vertical Envelope on each side of the building.

6. On a sidewall or roof section that faces a side yard, a gable or dormers may be added that do not exceed 20 percent of the length of the sidewall measured at finished floor level. The dormer or gable length will be measured at the plate height level. Example: a 60-foot-long side wall may have a dormer or gable that measures 12 feet long at the plate height level.

The No-Build Vertical Envelope for any side-yard setback that is less than 20 feet from a side property line in the E-2 Urban Estate District and the exceptions to it are further depicted as follows:

Attachment: NH- No Build Vertical Envelope Ordinance 5.16.22-2.1 (5950 : Ordinance - No-Build Vertical Envelope)

Double Stepback No Build Vertical Envelope Definition Exhibit for R-1-60 and R-1-75 Districts and E-2 District with less than 20 ft. Sideyard Setback

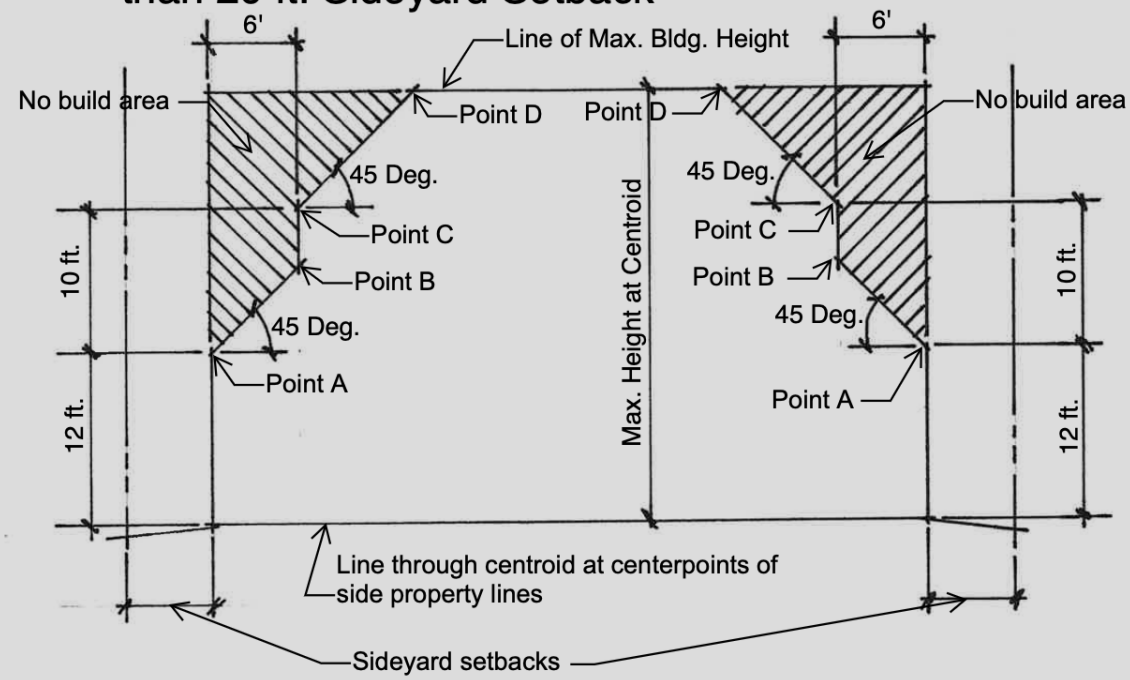

No Build Vertical Envelope

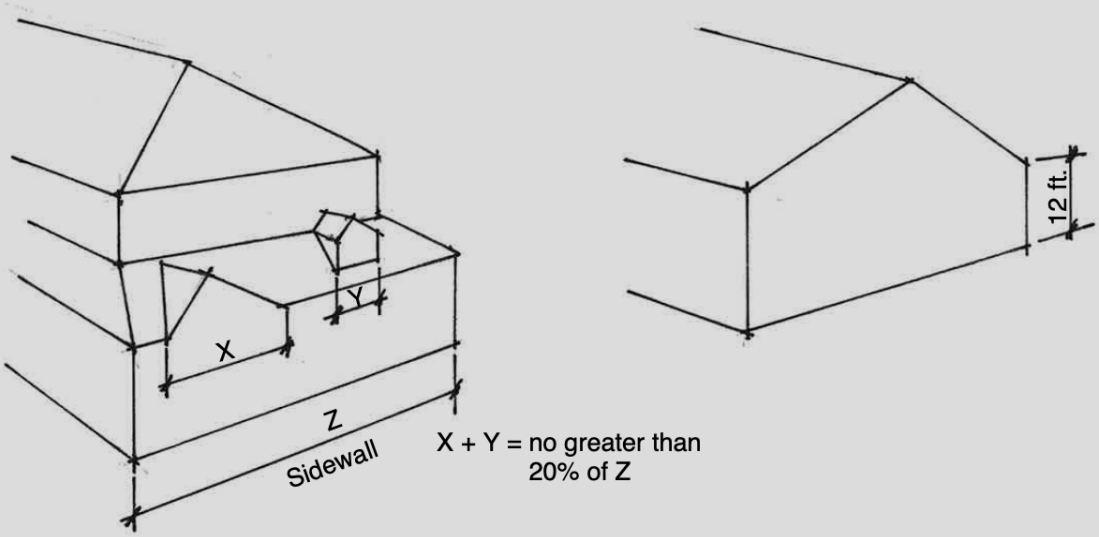

Exceptions to No Build Vertical Envelope

Attachment: NH- No Build Vertical Envelope Ordinance 5.16.22-2.1 (5950 : Ordinance - No-Build Vertical Envelope)

b. *No-Build Vertical Envelope when the side-yard setback is 20 feet or more.* No portion of a main building is permitted within the No-Build Vertical Envelope. Any side-yard setback that is 20 feet or more from a side property line must have a single step-back No-Build Vertical Envelope, the size and location of which are determined by creating a No-Build Vertical Envelope as follows:

1. Establish a point at the side-yard setback, at the centroid level, then move vertically up 22 feet to point "A."

2. At point "A," a 45-degree angle will be drawn to the point where it intersects a horizontal line drawn at the maximum building height. This point will be point "B."

3. Connect points "A" and "B" to delineate a No-Build Vertical Envelope on each side of the building.

4. On a sidewall or roof section that faces a side yard, a gable or dormers may be added that do not exceed 20 percent of the length of the sidewall measured at finished floor level. The dormer or gable length will be measured at the 22-foot plate height level. Example: a 60-foot-long side wall may have a dormer or gable that measures 12 feet long at the 22-foot plate height level.

The No-Build Vertical Envelopes for any side-yard setback that is 20 feet or more from a side property line in the E-2 Urban Estate District and the exceptions to it are further depicted as follows:

Attachment: NH- No Build Vertical Envelope Ordinance 5.16.22-2.1 (5950 : Ordinance - No-Build Vertical Envelope)

No Build Vertical Envelope Definition Exhibit

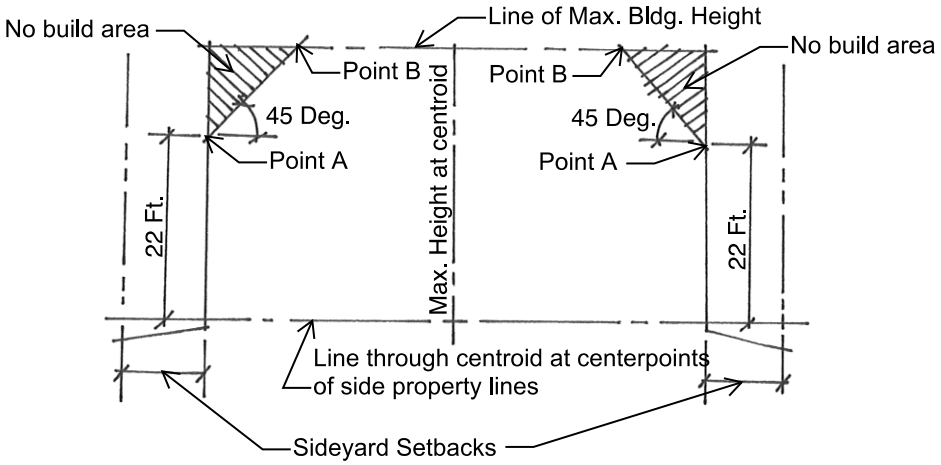

No Build Vertical Envelope

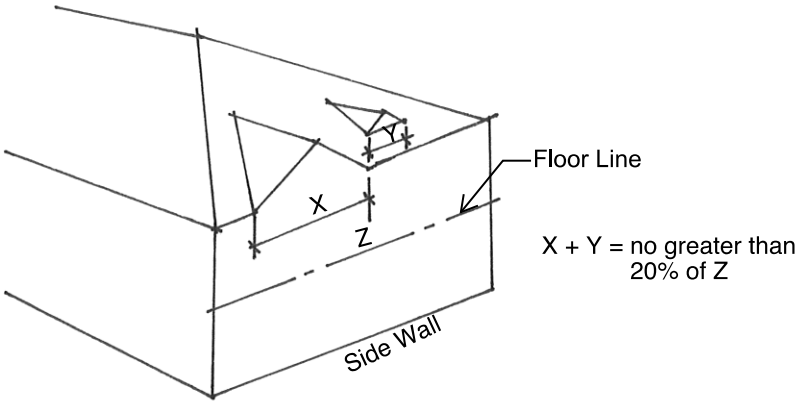

Exception to No Build Vertical Envelope

Attachment: NH- No Build Vertical Envelope Ordinance 5.16.22-2.1 (5950 : Ordinance - No-Build Vertical Envelope)

(10) *No-Build Vertical Envelope – Accessory Building.* No portion of an accessory building is permitted within the No-Build Vertical Envelope created as follows:

1. Establish a point at the side and rear yard setbacks, at the finished floor level, then move vertically up ten feet to point "A."
2. At point "A," a 45-degree angle will be drawn to the point where it intersects with the maximum building height which is point "B."
3. Connect points "A" and "B" to delineate a No-Build Vertical Envelope on every side of the building.

(~~9~~ 11) *Aggregate lots and combined lots with frontage on two non-intersecting streets.* In the case of aggregate lots and combined lots with frontage on two non-intersecting streets composed of a primary lot and a secondary lot, the primary lot being the lot on which a residence fronts, no development whatsoever shall be permitted on the secondary lot other than a separate and distinct single family home which fronts to the street on the frontage of the secondary lot. The prohibition on development on the secondary lot includes, but is not limited to, any accessory buildings, fences, outbuildings, driveways or pathways, additional accessory structures, swimming pools, tennis courts and other similar recreational uses requiring construction of permanent structures for such recreational use. It is the intent of this paragraph that each of the constituent lots, namely the primary lot and the secondary lot, shall retain all separate attributes, restrictions and other requirements for development under the Nichols Hills City Code despite the single ownership of the constituent lots.

(~~10~~ 12) *Perimeter fences and walls.* Perimeter fences and walls shall be subject to provisions of Chapter 8.

Attachment: NH- No Build Vertical Envelope Ordinance 5.16.22-2.1 (5950 : Ordinance - No-Build Vertical Envelope)

Section 4. Section 50-49 of the Nichols Hills City Code is hereby amended, with deleted language stricken through and new language underlined, to wit:

Sec. 50-49. R-1-75 Single-Family Residential District.

*****

(e) *Development regulations*.

*****

(8) *Maximum building height*.

a. Accessory building. 22 feet;

1. Accessory buildings will have a ten-foot maximum plate height measured from finished floor.

2. The finished floor shall be permitted to be one foot above undisturbed surrounding grade. Anything higher than one foot shall be subtracted from the ten-foot plate height.

~~b. No build envelope. No accessory building is permitted within "no build" areas created as follows:~~

~~1. Establish a point at the side, and rear yard setbacks, at the finished floor level then move vertically up ten feet to points "A."~~

~~2. At points "A" a 45 degree angle will be drawn to the point where it intersects with the maximum building height which is point "B."~~

~~3. Connect points "A" and "B" to delineate a "no build" area on every side of the structure.~~

~~c~~b. Maximum main building height is determined by the width of the lot at the front property line as follows:

1. Lots with less than 100-foot frontage at the front property line will have a 31-foot maximum height level.

2. Lots with 100-foot frontage or greater but less than or equal to 125 feet at the front property line will have a 32-foot maximum height level.

3. Lots greater than 125 feet at the front of the property line will have a 33-foot maximum height level.

Attachment: NH- No Build Vertical Envelope Ordinance 5.16.22-2.1 (5950 : Ordinance - No-Build Vertical Envelope)

4. No main building shall exceed 16 feet in height within 40 feet of the rear lot line.

~~d. *No-Build Vertical Envelope*. No main building is permitted within "no build" areas created as follows: Create a "no build" area on each side of the structure as follows:~~

~~1. Establish a point at the side-yard setback, at the centroid level, then move vertically up 22 feet to point "A".~~

~~2. At point "A" a 45-degree angle will be drawn to the point where it intersects with the maximum building height, which is point "B."~~

~~3. Connect points "A" and "B" to delineate a "no-build" area on each side of the structure.~~

~~4. On a sidewall or roof section that faces a side yard, a gable or dormers may be added that do not exceed 20 percent of the length of the sidewall measured at finished floor level. The dormer or gable length will be measured at the plate height level. Example: a 60-foot-long side wall may have a dormer or gable that measures 12 feet long at the plate height level.~~

(9) *No-Build Vertical Envelope – Main Building*. No portion of a main building is permitted within the No-Build Vertical Envelope. Each side of a building must have a double step-back No-Build Vertical Envelope, the size and location of which are determined by creating a No-Build Vertical Envelope as follows:

1. Establish a point at the side-yard setback, at the centroid level, then move vertically up 12 feet to point "A."

2. At point "A," a 45-degree angle will be drawn to the point where it intersects a vertical line offset from the side yard setback a distance of six feet. This point will be point "B."

3. From point "B," extend vertically four feet. This point will be point "C."

4. At point "C," a 45-degree angle will be drawn to the point where it intersects with the maximum building height, which will be point "D."

5. Connect points "A," "B," "C," and "D" to delineate a No-Build Vertical Envelope on each side of the building.

Attachment: NH- No Build Vertical Envelope Ordinance 5.16.22-2.1 (5950 : Ordinance - No-Build Vertical Envelope)

6. On a sidewall or roof section that faces a side yard, a gable or dormers may be added that do not exceed 20 percent of the length of the sidewall measured at finished floor level. The dormer or gable length will be measured at the plate height level. Example: a 60-foot-long side wall may have a dormer or gable that measures 12 feet long at the plate height level.

There will not be a No-Build Vertical Envelope on a single-story gable wall with a maximum plate line of 12 feet.

The No-Build Vertical Envelope for the R-1-75 Single-Family Residential District and the exceptions to it are further depicted as follows:

Attachment: NH- No Build Vertical Envelope Ordinance 5.16.22-2.1 (5950 : Ordinance - No-Build Vertical Envelope)

Double Stepback No Build Vertical Envelope Definition Exhibit for R-1-60 and R-1-75 Districts and E-2 District with less than 20 ft. Sideyard Setback

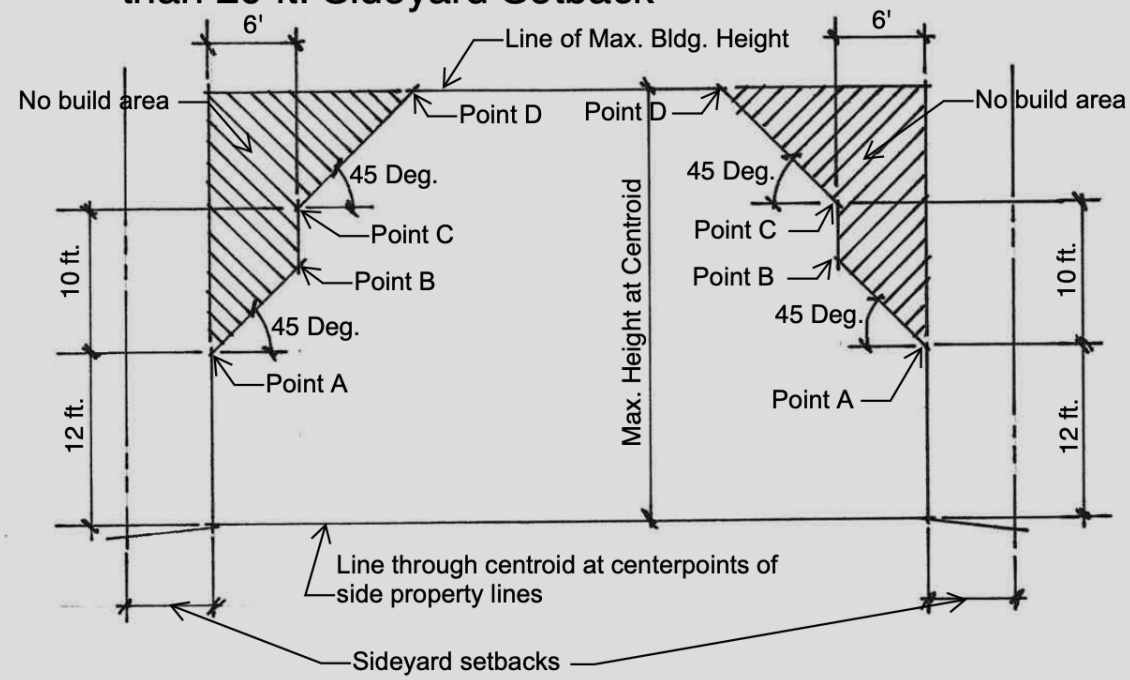

No Build Vertical Envelope

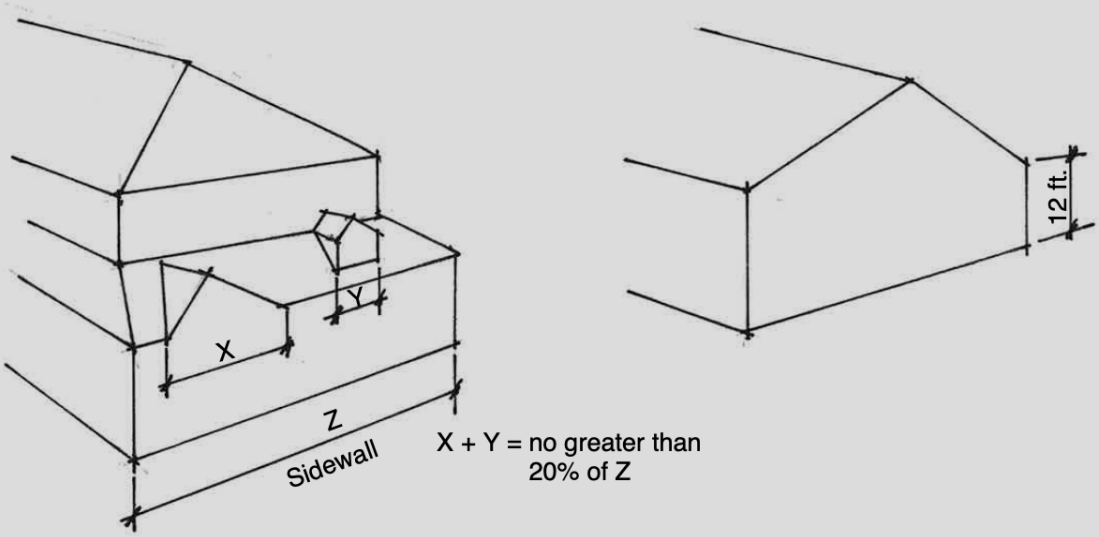

Exceptions to No Build Vertical Envelope

Attachment: NH- No Build Vertical Envelope Ordinance 5.16.22-2.1 (5950 : Ordinance - No-Build Vertical Envelope)

(10) *No-Build Vertical Envelope – Accessory Building.* No portion of an accessory building is permitted within the No-Build Vertical Envelope created as follows:

1. Establish a point at the side and rear yard setbacks, at the finished floor level, then move vertically up ten feet to point "A."
2. At point "A," a 45-degree angle will be drawn to the point where it intersects with the maximum building height which is point "B."
3. Connect points "A" and "B" to delineate a No-Build Vertical Envelope on every side of the building.

(~~9~~ 11) *Aggregate lots and combined lots with frontage on two non-intersecting streets.* In the case of aggregate lots and combined lots with frontage on two non-intersecting streets composed of a primary lot and a secondary lot, the primary lot being the lot on which a residence fronts, no development whatsoever shall be permitted on the secondary lot other than a separate and distinct single family home which fronts to the street on the frontage of the secondary lot. The prohibition on development on the secondary lot includes, but is not limited to, any accessory buildings, fences, outbuildings, driveways or pathways, additional accessory structures, swimming pools, tennis courts and other similar recreational uses requiring construction of permanent structures for such recreational use. It is the intent of this paragraph that each of the constituent lots, namely the primary lot and the secondary lot, shall retain all separate attributes, restrictions and other requirements for development under the Nichols Hills City Code despite the single ownership of the constituent lots.

(~~10~~ 12) *Perimeter fences and walls.* Perimeter fences and walls shall be subject to provisions of Chapter 8.

(~~11~~ 13) *Second story decks or patios.* All second story decks or patios are subject to second story main building regulations.

(~~12~~ 14) *Combined lots.* When two lots are combined the side yard setbacks are doubled, except when lots are no more than 20 feet in width.

(~~13~~ 15) *Separation of accessory buildings from main building.* Accessory buildings must have a minimum separation of ten feet from the main building.

Attachment: NH- No Build Vertical Envelope Ordinance 5.16.22-2.1 (5950 : Ordinance - No-Build Vertical Envelope)

Section 5. Section 50-50 of the Nichols Hills City Code is hereby amended, with deleted language stricken through and new language underlined, to wit:

Sec. 50-50. R-1-60 Single-Family Residential District.

*****

(e) *Development regulations*.

*****

(8) *Maximum building height*.

a. Accessory building. 22 feet;

1. Accessory buildings will have a ten-foot maximum plate height measured from finished floor.

2. The finished floor shall be permitted to be one foot above undisturbed surrounding grade. Anything higher than one foot shall be subtracted from the ten-foot plate height.

~~b. No build envelope. No accessory building is permitted within "no build" areas created as follows:~~

~~1. Establish a point at the side, and rear yard setbacks, at the finished floor level then move vertically up ten feet to points "A."~~

~~2. At points "A" a 45 degree angle will be drawn to the point where it intersects with the maximum building height which is point "B."~~

~~3. Connect points "A" and "B" to delineate a "no build" area on every side of the structure.~~

~~c~~b. Maximum main building height is determined by the width of the lot at the front property line as follows:

1. Maximum main building height is 30 feet.

2. No main building shall exceed 16 feet in height within 40 feet of the rear lot line.

~~d. *No-Build Vertical Envelope*. No main building is permitted within "no build" areas created as follows: Create a "no build" area on each side of the structure as follows:~~

Attachment: NH- No Build Vertical Envelope Ordinance 5.16.22-2.1 (5950 : Ordinance - No-Build Vertical Envelope)

~~1. Establish a point at the side-yard setback, at the centroid level, then move vertically up 22 feet to point "A".~~

~~2. At point "A" a 45-degree angle will be drawn to the point where it intersects with the maximum building height, which is point "B."~~

~~3. Connect points "A" and "B" to delineate a "no-build" area on each side of the structure.~~

~~4. On a sidewall or roof section that faces a side yard, a gable or dormers may be added that do not exceed 20 percent of the length of the sidewall measured at finished floor level. The dormer or gable length will be measured at the plate height level. Example: a 60-foot-long side wall may have a dormer or gable that measures 12 feet long at the plate height level.~~

(9) *No-Build Vertical Envelope – Main Building.* No portion of a main building is permitted within the No-Build Vertical Envelope. Each side of a building must have a double step-back No-Build Vertical Envelope, the size and location of which are determined by creating a No-Build Vertical Envelope as follows:

1. Establish a point at the side-yard setback, at the centroid level, then move vertically up 12 feet to point "A."

2. At point "A," a 45-degree angle will be drawn to the point where it intersects a vertical line offset from the side yard setback a distance of six feet. This point will be point "B."

3. From point "B," extend vertically four feet. This point will be point "C."

4. At point "C," a 45-degree angle will be drawn to the point where it intersects with the maximum building height, which will be point "D."

5. Connect points "A," "B," "C," and "D" to delineate a No-Build Vertical Envelope on each side of the building.

6. On a sidewall or roof section that faces a side yard, a gable or dormers may be added that do not exceed 20 percent of the length of the sidewall measured at finished floor level. The dormer or gable length will be measured at the plate height level. Example: a 60-foot-long side wall may have a dormer or gable that measures 12 feet long at the plate height level.

Attachment: NH- No Build Vertical Envelope Ordinance 5.16.22-2.1 (5950 : Ordinance - No-Build Vertical Envelope)

There will not be a No-Build Vertical Envelope on a single-story gable wall with a maximum plate line of 12 feet.

The No-Build Vertical Envelope for the R-1-60 Single Family Residential District and the exceptions to it are further depicted as follows:

Attachment: NH- No Build Vertical Envelope Ordinance 5.16.22-2.1 (5950 : Ordinance - No-Build Vertical Envelope)

Double Stepback No Build Vertical Envelope Definition Exhibit for R-1-60 and R-1-75 Districts and E-2 District with less than 20 ft. Sideyard Setback

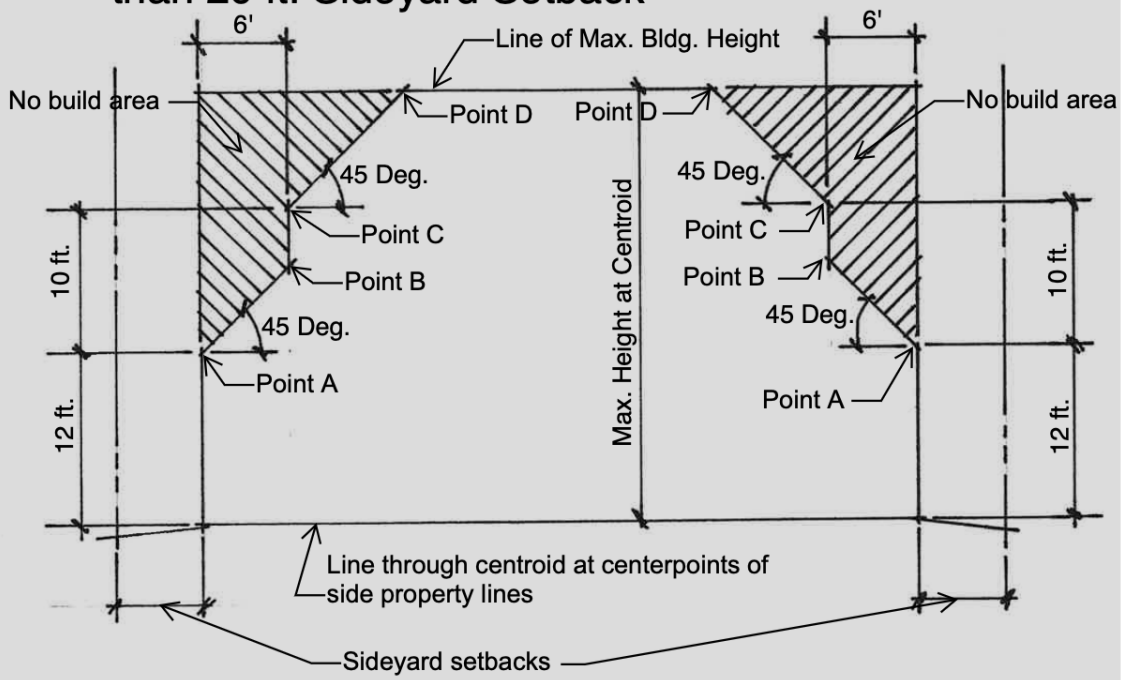

No Build Vertical Envelope

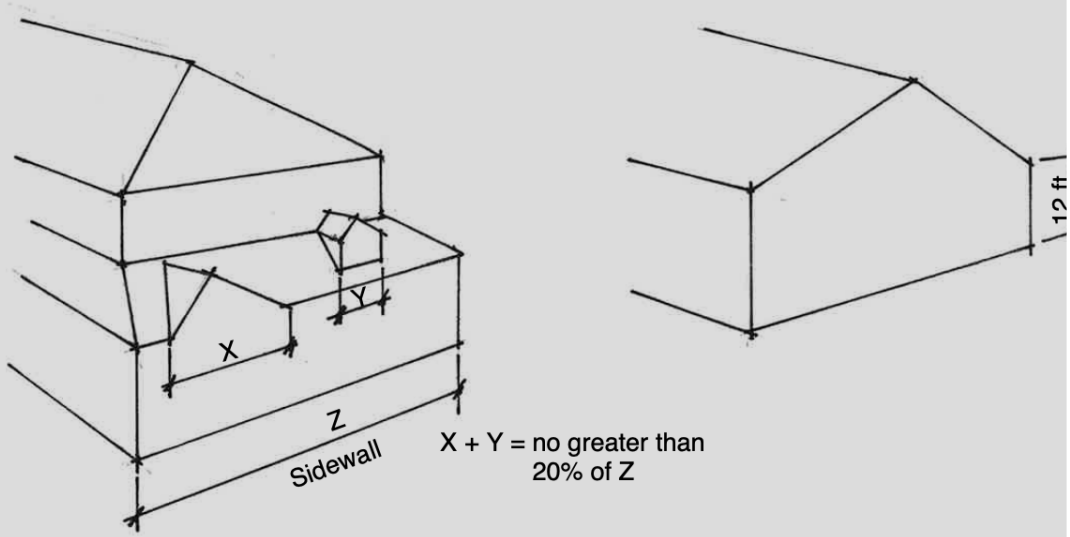

Exceptions to No Build Vertical Envelope

Attachment: NH- No Build Vertical Envelope Ordinance 5.16.22-2.1 (5950 : Ordinance - No-Build Vertical Envelope)

(10) *No-Build Vertical Envelope – Accessory Building.* No portion of an accessory building is permitted within the No-Build Vertical Envelope created as follows:

1. Establish a point at the side and rear yard setbacks, at the finished floor level, then move vertically up ten feet to point "A."
2. At point "A," a 45-degree angle will be drawn to the point where it intersects with the maximum building height which is point "B."
3. Connect points "A" and "B" to delineate a No-Build Vertical Envelope on every side of the building.

(~~9~~ 11) *Aggregate lots and combined lots with frontage on two non-intersecting streets.* In the case of aggregate lots and combined lots with frontage on two non-intersecting streets composed of a primary lot and a secondary lot, the primary lot being the lot on which a residence fronts, no development whatsoever shall be permitted on the secondary lot other than a separate and distinct single family home which fronts to the street on the frontage of the secondary lot. The prohibition on development on the secondary lot includes, but is not limited to, any accessory buildings, fences, outbuildings, driveways or pathways, additional accessory structures, swimming pools, tennis courts and other similar recreational uses requiring construction of permanent structures for such recreational use. It is the intent of this paragraph that each of the constituent lots, namely the primary lot and the secondary lot, shall retain all separate attributes, restrictions and other requirements for development under the Nichols Hills City Code despite the single ownership of the constituent lots.

(~~10~~ 12) *Second story decks or patios.* All second story decks or patios are subject to second story main building regulations.

(~~11~~ 13) *Combined lots.* When two lots are combined the side yard setbacks are doubled, except when lots are no more than 20 feet in width.

(~~12~~ 14) *Separation of accessory buildings from main building.* Accessory buildings must have a minimum separation of ten feet from the main building.

Section 6. All ordinances or parts of ordinances in conflict herewith are, to the extent of such conflict, hereby repealed.

Section 7. The provisions of this ordinance are severable and if any part or provision hereof shall be adjudged invalid by any court of competent jurisdiction, such adjudication shall not affect or impair any of the remaining parts or provisions hereof.

Section 8. EMERGENCY SECTION. WHEREAS, in the judgment of the Council it is necessary for the preservation of the peace, health, welfare and safety of the City of Nichols Hills, Oklahoma, and of the inhabitants thereof that the provisions of this ordinance be put into full force

Attachment: NH- No Build Vertical Envelope Ordinance 5.16.22-2.1 (5950 : Ordinance - No-Build Vertical Envelope)

and effect immediately, and therefore an emergency is hereby declared to exist by reason whereof this ordinance shall take effect and be in full force from and after its passage as provided by law.

PASSED by the Council of the City of Nichols Hills, Oklahoma, on the ____ day of _____, 2022.

APPROVED by the Mayor of the City of Nichols Hills, Oklahoma, on the ____ day of _____, 2022.

ATTEST:

_____
Mayor

_____
City Clerk

Reviewed as to Form and Legality:

_____
City Attorney

Attachment: NH- No Build Vertical Envelope Ordinance 5.16.22-2.1 (5950 : Ordinance - No-Build Vertical Envelope)

July 26, 2022

Ms. Amanda Copeland
City Clerk
City of Nichols Hills
6407 Avondale Drive
Nichols Hills, OK 73116

RE: City of Nichols Hills Ordinance Amendment – Chapter 50 - Opposition

Ms. Copeland;

This letter is to formally notify the City of Nichols Hills of my protest to the Ordinance amending Chapter 50 of the Nichols Hills City Code regarding the No-Build Vertical Envelope. In particular the one that will impact my property and others in the zoning code R-1-60. Reviewing the Ordinance and producing the attached diagram of my interpretation of the consequences, I used two homes for example on Tedford.

These homes are side by side and were originally built in 1936 and 1945 and represent part of the history of this City. The setback rules will change the street façade presence and may not allow the rebuilding of these or a number of other established homes. I am concerned that this new code will not allow other homes in other areas to be reimagined and become complementary to the existing built environment.

Additionally, this Ordinance, on my own residence at 1205 Belford, which my wife and I significantly renovated over the last two years, if adopted, would not allow us to add the two-story modest addition to the back that we had envisioned in lieu of tearing the structure down.

This code will also alter the design of other smaller lots in zoning code for R-1-75, however I do not have a property under that zoning category.

I have offered in the past, and sent Shane Pate, a copy of code from the City of University Park (Dallas, Texas) and I feel it has some items that would benefit homeowners as an addition to this ordinance. At issue with the current and indicated proposal, noted in the attached diagram, that brings the required side yard setbacks to the front building line.

These types of considerations need to be incorporated. Because of this I ask for a non-approval of the Ordinance, sending it back to the Building Committee.

Sincerely,

Curtis Wilson AIA, ACHA, RCID
1205 Belford Ave
Nichols Hills, OK 73116

Exhibit A – Diagram of Existing Tedford Houses
Exhibit B – Excerpt from City of University Park, Texas Zoning Ordinance

Cc: Sody Clements- Ward One
Peter Hoffman – Ward Two
Steven J. Goetzinger – Ward Three
Shane Pate – City Manager

Attachment: Curtis Wilson Letter (5950 : Ordinance - No-Build Vertical Envelope)

EXHIBIT A

1118 TEDFORD WAY
Built 1945

GOOGLE -
STREET VIEW

1120 TEDFORD WAY
Built 1936

Possible portion of home that may not be able to be rebuilt in entirety.

Approximate Height Reduction.

Possible Side yard Area that might not be able to be rebuilt.

1120 TEDFORD WAY
Built 1936

PHOTO FROM
COUNTY ASSESOR

Version 7.27.2022 -
Dimensions and Building Lines A
Approximate
Print Not To Scale

Attachment: Curtis Wilson Letter (5950 : Ordinance - No-Build Vertical Envelope)

EXHIBIT B
EXCERPT FROM CITY of UNIVERSITY PARK, TEXAS – Zoning Ordinance
Available on the web at
https://www.uptexas.org/government/community-development/zoning

2.4.3. Lot and Building Zones. For the purpose of presenting SF lot and building regulations, lots are divided into a series of smaller segments or "zones," as described in this subsection and illustrated in Figure 2-1.

A. Overall Lot. Some regulations apply to the entire lot. These regulations are referred to as "overall lot" regulations and are presented in Section 2.4.4.

B. Street-Yard Zone. Street-yard zone regulations govern the area between any lot line abutting a street right-of-way and the minimum front or street-side setback line (see Section 2.4.5).

C. Main-House Zone. The main-house zone accommodates the greatest building mass. The zone extends from the back of the street-yard zone rearward to the mid-lot zone (see Section 2.4.6).

D. Mid-Lot Zone. The mid-lot zone lies immediately at the back of the main-house zone and extends rearward to the rear lot zone. Portions of the principal building may be located in this zone, but the regulations are more stringent than in the main-house zone (see Section 2.4.7).

E. Rear-Lot Zone. The rear-lot zone covers the rearmost portion of the lot, typically abutting an alley. The rear-lot zone extends from the rear lot line forward for a distance of 40 feet (see Section 2.4.8).

Figure 2-1: SF District Lot Zones

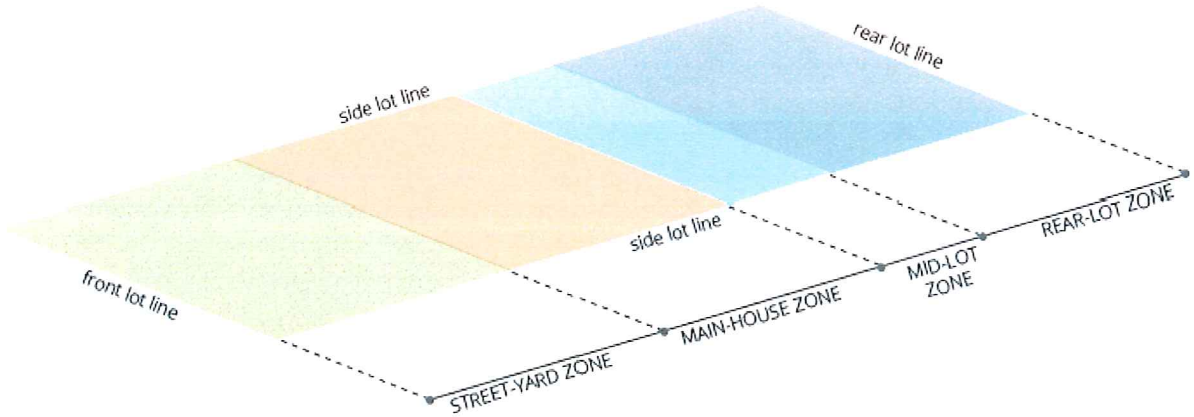

2.4.4. Overall Lot. The overall lot regulations of Table 2-2 apply in SF districts.

Attachment: Curtis Wilson Letter (5950 : Ordinance - No-Build Vertical Envelope)

EXHIBIT B
EXCERPT FROM CITY of UNIVERSITY PARK, TEXAS – Zoning Ordinance
Available on the web at
https://www.uptexas.org/government/community-development/zoning

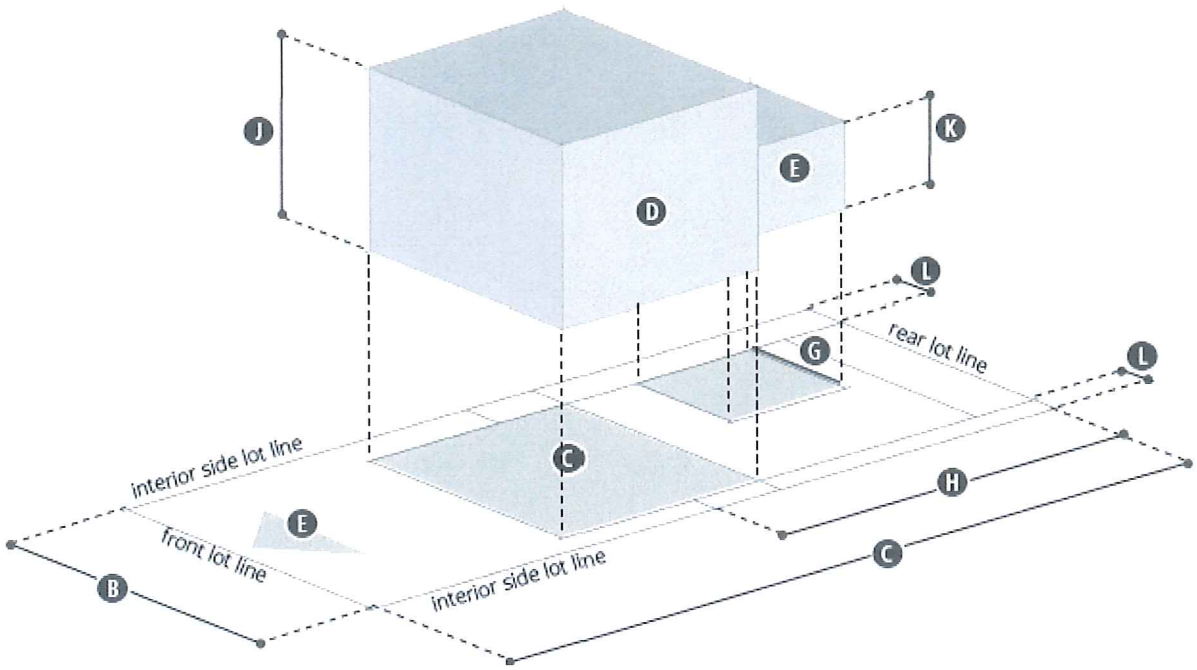

Table 2-2: Overall Lot Regulations

Regulation	SF-1	SF-2	SF-3	SF-4
Lot Size				
(A) Minimum Lot Area (sq. ft.)	35,000	10,000	8,400	7,000
(B) Minimum Lot Width (ft.)	150	70	60	50
(C) Minimum Lot Depth (ft.)	150	120	120	120
Buildings				
(D) Maximum Number of Principal Buildings	1	1	1	1
(E) Principal Building Orientation	Principal building must face a street other than alley			
(F) Permitted Accessory Structures	See Section 5.3.2			
(G) Garage, Carport Location, Orientation	See Article 7			
(H) Maximum Building Coverage from Midpoint of the Lot to the Rear Lot Line (%) [1]	50			
(I) Maximum Impermeable Lot Coverage	See Section 2.9			
Building Height [2]				
(J) Maximum Principal Building Height (ft.)	35	35	35	35
(K) Maximum Accessory Building Height (ft.)	25	25	25	25
Minimum Interior Side Setback (ft.)				
(L) One side (% of lot width) [3]	10	10	10	10
Both sides combined (% of lot width) [3] [4]	24	24	24	24
(M) Permitted Encroachments	See Section 2.10			

Attachment: Curtis Wilson Letter (5950 : Ordinance - No-Build Vertical Envelope)

EXHIBIT B
EXCERPT FROM CITY of UNIVERSITY PARK, TEXAS – Zoning Ordinance
Available on the web at
https://www.uptexas.org/government/community-development/zoning

TABLE NOTES:

[1] Building coverage includes all principal and accessory buildings, and all structures 30 inches or more above grade.

[2] See Section 11.3.12 for building height measurement rules.

[3] If the entire structure is 1 story, the minimum side yard may be 10% of the total lot width on each side yard.

[4] Minimum combined setback of 22% applies to lot less than 60 feet in width.

2.4.5. Street-Yard Zone. The street-yard zone regulations of Table 2-3 apply in SF districts.

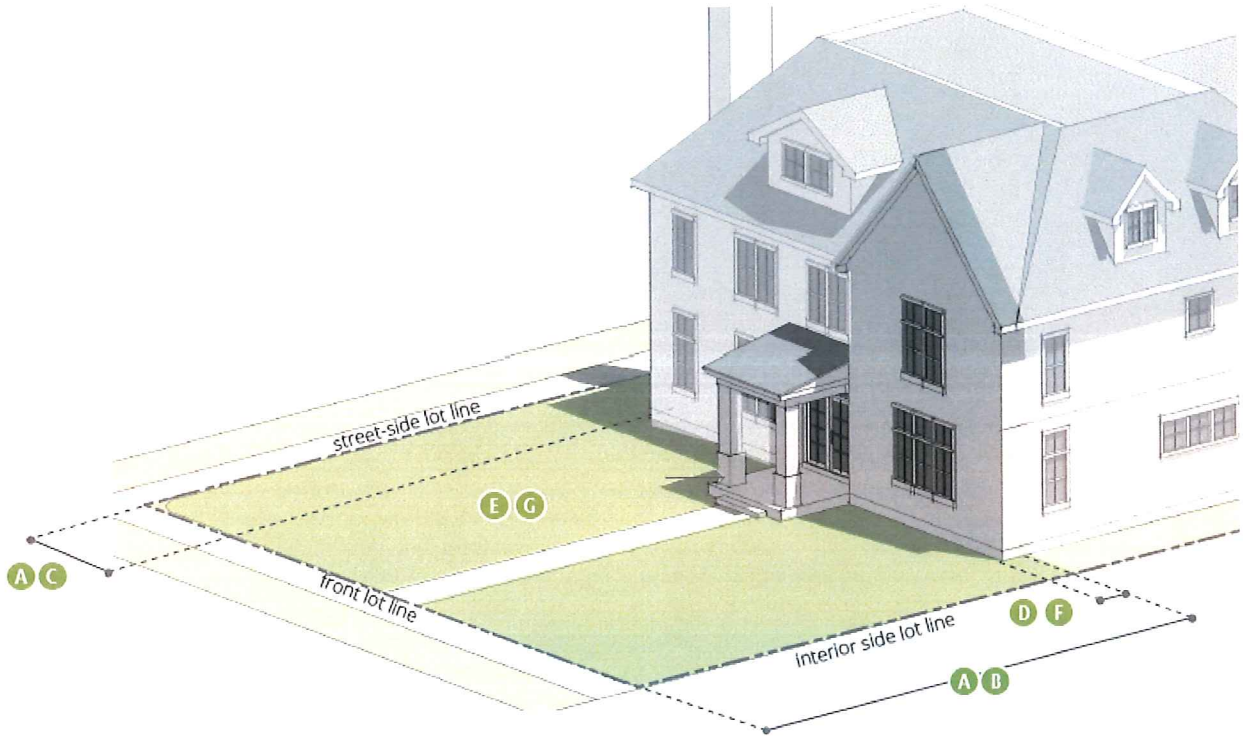

Table 2-3: Street-Yard Zone Regulations

Regulation	SF-1	SF-2	SF-3	SF-4
Location				
(A) Street-Yard Zone Location	Between any lot line abutting a street and the minimum front or streetside setback line			
Street Setbacks				
(B) Minimum Front Setback (ft.) [1]	50	30	30	25

Attachment: Curtis Wilson Letter (5950 : Ordinance - No-Build Vertical Envelope)

EXHIBIT B
EXCERPT FROM CITY of UNIVERSITY PARK, TEXAS – Zoning Ordinance
Available on the web at
https://www.uptexas.org/government/community-development/zoning

	Average front setback distance applies per [1]			
(C) Minimum Street-Side Setback (ft.) [2]	10	10	10	10
(D) Permitted Encroachments	See Section 2.10			
(E) Maximum Impermeable Coverage (%)	50			
Building Locations				
(F) Front Facade Articulation	See Section 2.4.9			
(G) Building Coverage	No building is allowed in the street-yard zone except as permitted by encroachments and front facade articulations			

TABLE NOTES:

[1] Refer to the city's list of average front setbacks, available online. See average front setback regulations of Section 11.3.8 when the average existing building setback on a block face is greater or less than the minimums of this table.

[2] Corner lots with a width of 60 feet or less may have a minimum street-side setback of 10% of lot width if the distance between the curb and sidewalk is 5 feet or more, the sidewalk width is 4 feet or more, and the front setback complies with minimum front setback regulations.

[3] Garages, carports, or similar vehicle storage areas facing a side street shall be set back a minimum of 20 feet from the street right-of-way. See Article 7.

2.4.6. Main-House Zone. The main-house zone regulations of Table 2-4 apply in SF districts.

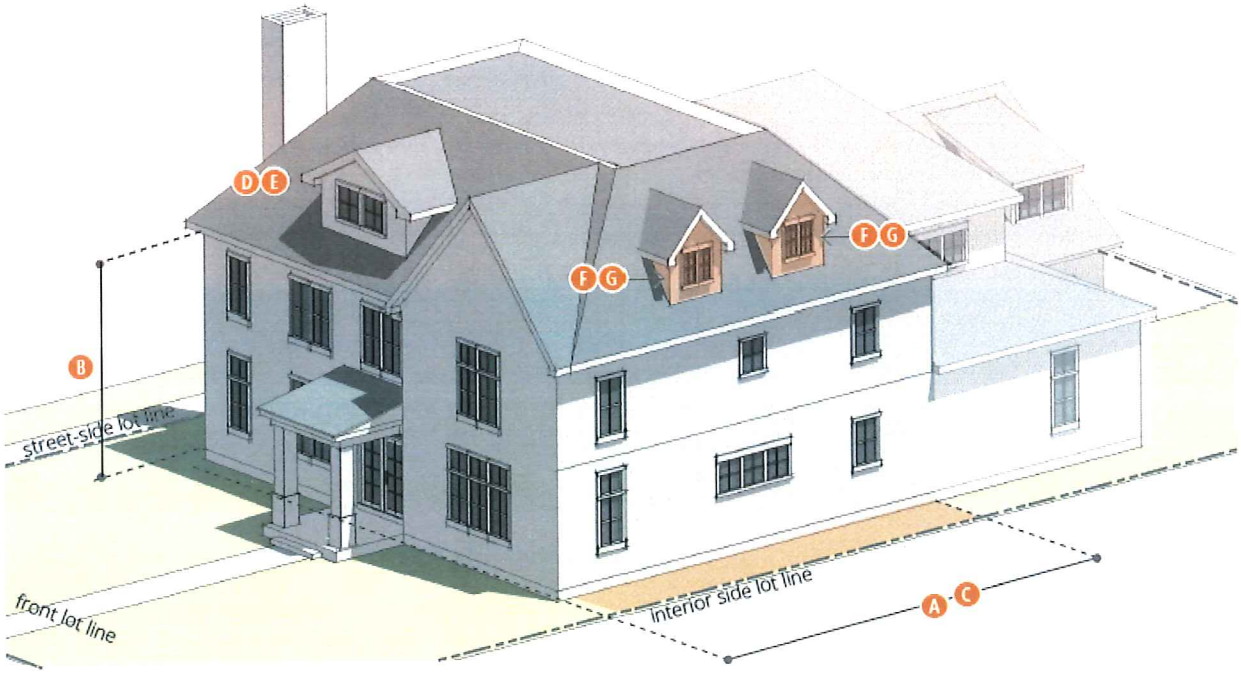

Attachment: Curtis Wilson Letter (5950 : Ordinance - No-Build Vertical Envelope)

EXHIBIT B
EXCERPT FROM CITY of UNIVERSITY PARK, TEXAS – Zoning Ordinance
Available on the web at
https://www.uptexas.org/government/community-development/zoning

Table 2-4: Main-House Zone Regulations

Regulation	SF-1	SF-2	SF-3	SF-4
Location				
(A) Main-House Zone Location	From back of street-yard zone rearward for a distance equal to 42% of the overall lot depth [1]			
Wall Height				
(B) Maximum Top Plate Height (ft.) [2]	Lots 70 ft. to less than 80 ft. in width: 25 Lots 60 ft. to less than 70 ft. in width: 24 Lots less than 60 ft. in width: 23			
Building Coverage				
(C) Building Coverage	Building may fully occupy the main-house zone with the exception of any setbacks			
Third Story				
(D) Maximum 3rd Story Area	50% of total 2nd floor area			
(E) Minimum Habitable Area Requiring at least 2 Exit Stairs (sq. ft.) [3]	501	501	501	501
(F) Maximum 3rd Story Wall Area facing Interior Side Lot Line (sq. ft.) [3]	200	180	165	135
(G) Third Story Windows and Dormers Facing Interior Side Lot Line	See section 2.8.2			

TABLE NOTES:

[1] The beginning point of measurement of the 42% maximum side wall length may be set back from the street-yard zone if there is an offset in the wall a minimum of 8 feet from the minimum side yard setback.

[2] No maximum top plate height applies to lots 80 feet or greater in width.

(Ordinance 18/038 adopted 1/6/18)

[3] Third story wall area includes the aggregate area of all vertical walls, gable walls, and all sides of all dormers. (Ordinance 20-018 adopted 10/6/20)

2.4.7. Mid-Lot Zone. The mid-lot zone regulations of Table 2-5 apply in SF districts.

Attachment: Curtis Wilson Letter (5950 : Ordinance - No-Build Vertical Envelope)

EXHIBIT B
EXCERPT FROM CITY of UNIVERSITY PARK, TEXAS – Zoning Ordinance
Available on the web at
https://www.uptexas.org/government/community-development/zoning

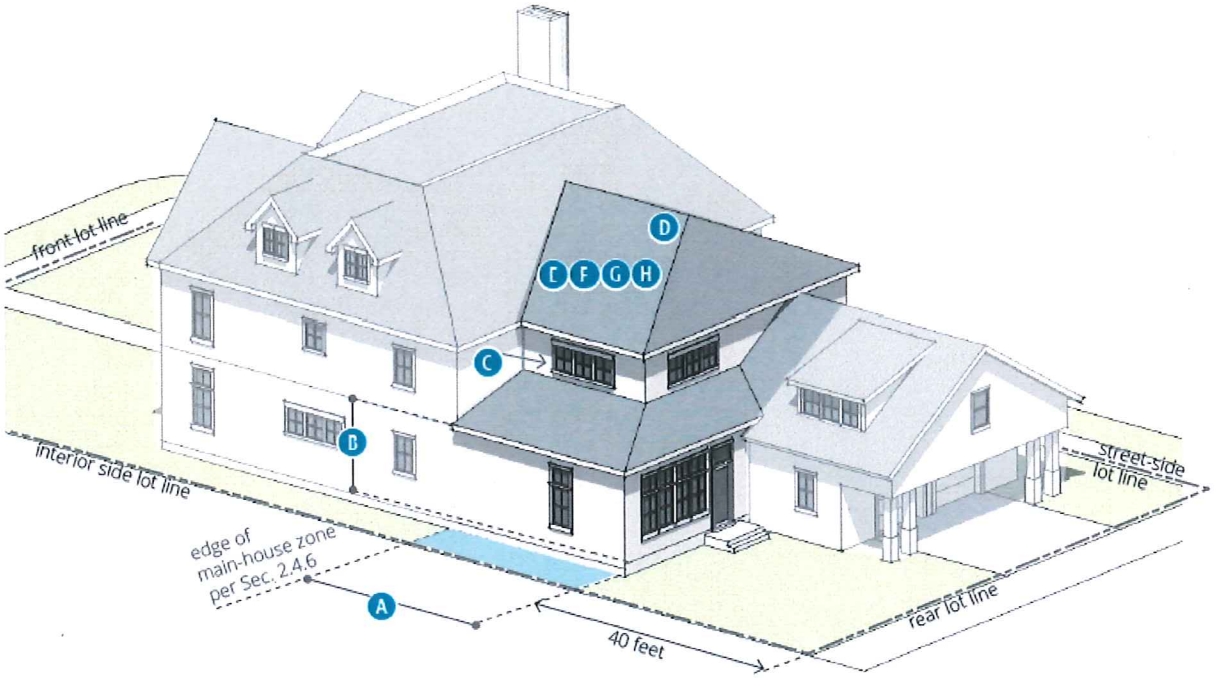

(Ordinance 18/038 adopted 1/6/18)

Table 2-5: Mid-Lot Zone Regulations

Regulation	SF-1	SF-2	SF-3	SF-4
Location				
(A) Mid-Lot Zone Location	From the rear of main-house zone per Section 2.4.6 to front of rear-lot zone			
Walls Facing Interior Side Lot Lines [1] [2]				
(B) Maximum top plate height (ft.) [2] [3]	Lots 70 ft. to less than 80 ft. in width: 25 Lots 60 ft. to less than 70 ft. in width: 24 Lots less than 60 ft. in width: 23			
(C) Additional Wall Height above 12.5 ft.	2 ft. additional height per 1 ft. of additional side setback			
Building Coverage				
(D) Building Coverage	See Section 2.4.4 for maximum coverage limits from midpoint of lot to rear lot line			
Third Story				
(E) Maximum 3rd Story Floor Area	50% of total 2nd floor area			
(F) Minimum Habitable Area Requiring at least 2 Exit Stairs	501	501	501	501
(G) Maximum 3rd Story Wall Area facing Interior Side Lot Line (sq. ft.) [3]	200	180	165	135

Attachment: Curtis Wilson Letter (5950 : Ordinance - No-Build Vertical Envelope)

EXHIBIT B
EXCERPT FROM CITY of UNIVERSITY PARK, TEXAS – Zoning Ordinance
Available on the web at
https://www.uptexas.org/government/community-development/zoning

(H) Third Story Windows and Dormers Facing Interior Side Lot Line	See Section 2.8.2

TABLE NOTES:

[1] Wall height is measured from the finished first floor elevation to the top plate per Section 11.3.13.

[2] See Section 2.8.1 for roof pitches that are considered walls.

[3] No maximum top plate height for lots 80 feet or greater in width.

[4] Third story wall area includes the aggregate area of all vertical walls, gable walls, and all sides of all dormers.

(Ordinance 18/038 adopted 1/6/18; Ordinance 20-018 adopted 10/6/20)

2.4.8. Rear-Lot Zone. The rear-lot zone regulations of Table 2-6 apply in SF districts.

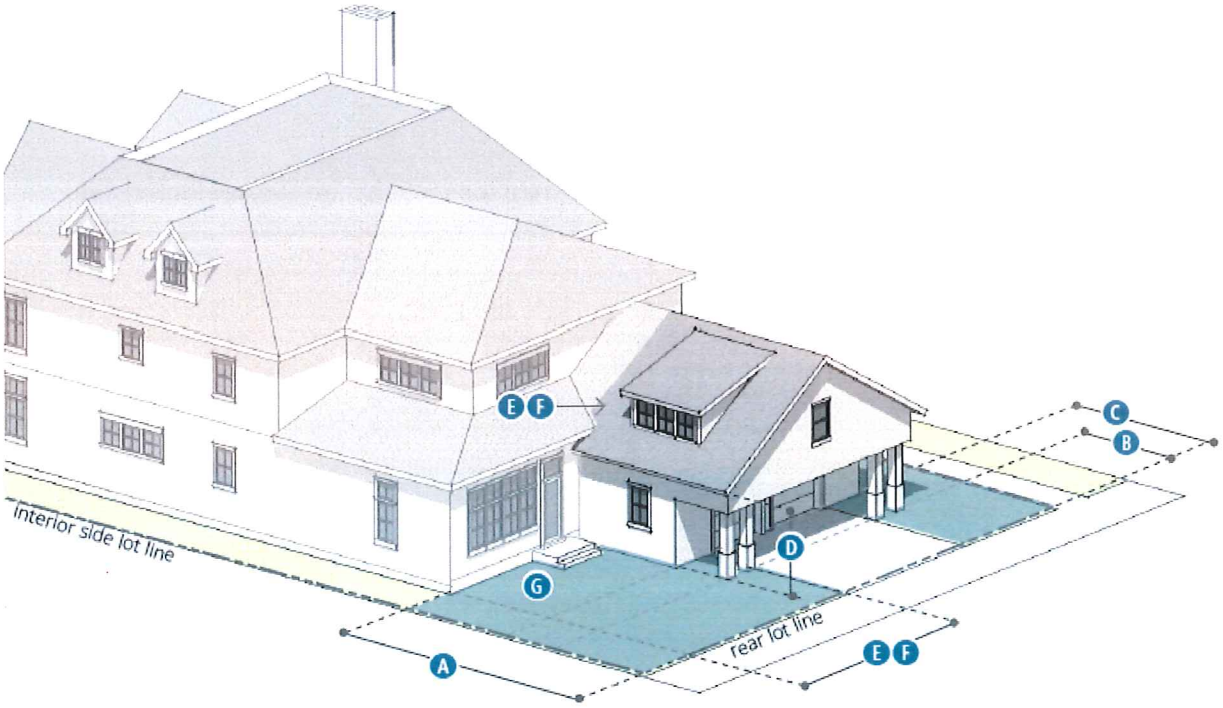

Table 2-6: Rear-Lot Zone Regulations

Regulation	SF-1	SF-2	SF-3	SF-4
Location				

Attachment: Curtis Wilson Letter (5950 : Ordinance - No-Build Vertical Envelope)

EXHIBIT B
EXCERPT FROM CITY of UNIVERSITY PARK, TEXAS – Zoning Ordinance
Available on the web at
https://www.uptexas.org/government/community-development/zoning

(A) Rear-Lot Zone Location	From rear lot line forward for distance of 40 ft.			
(B) Minimum Rear Setback (ft.) except Garage Door (see C below)	12.5	12.5	12.5	12.5
(C) Minimum Rear Garage Door Setback (ft.)[1]	20	20	20	20
Walls Heights [2] [3]				
(D) Maximum Wall Height (ft.)	12.5	12.5	12.5	12.5
(E) Additional Wall Height above 12.5 ft.	Allowed when part of gable or dormer and set back minimum 20 ft. from interior side lot line			
(F) Windows, Dormers, Openings Above 12.5 ft. Wall Height	Allowed when set back minimum 20 feet from the interior side lot line			
Building Coverage				
(G) Building Coverage	See Section 2.4.4 for maximum coverage limits from midpoint of lot to rear lot line			

TABLE NOTES:

[1] See Article 7. for garage and carport regulations.

[2] Wall height is measured from finished first floor elevation to the top plate per Section 11.3.13.

[3] See Section 2.8.1 for roof pitches that are considered walls.

[4] See Section 5.3.2 for regulations governing accessory structures allowed in the rear-lot zone, including pools.

2.4.9. Front Facade Articulation

A. Purpose and Applicability. The front facade articulation provisions of this subsection are intended to encourage multiple planes on the front street-facing facade of houses. The provisions apply to houses in SF districts.

B. Permitted Facade Encroachments.

1. Up to 60% of the width of a house's front facade may encroach into (forward of) the required front setback by up to 2 feet if the remaining portion of the house's front facade is set back at least one foot more than the minimum front setback. One example of this front setback encroachment allowance is illustrated in Figure 2-2.

2. If a portion of a house's front facade is set back 3 feet or more beyond the minimum front street setback, the main-house zone is allowed to extend up to 3 feet into the mid-lot zone or the rear-lot zone when no mid-lot zone exists. The width of the house's main-house extension may not exceed the width of the portion of the front facade

Attachment: Curtis Wilson Letter (5950 : Ordinance - No-Build Vertical Envelope)

that is set back 3 feet or more beyond the minimum front street setback. Permitted rear yard encroachments are illustrated in Figure 2-3.

Figure 2-2: Permitted Front Facade Articulation Encroachments

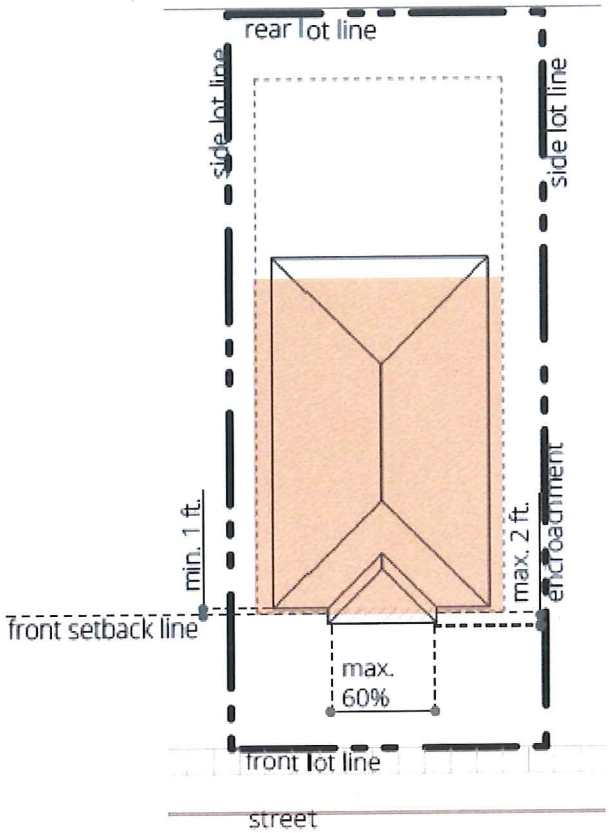

Figure 2-3: Permitted Front Facade Articulation Encroachments with Rear Yard Encroachment

Attachment: Curtis Wilson Letter (5950 : Ordinance - No-Build Vertical Envelope)

EXHIBIT B

EXCERPT FROM CITY of UNIVERSITY PARK, TEXAS – Zoning Ordinance
Available on the web at
https://www.uptexas.org/government/community-development/zoning

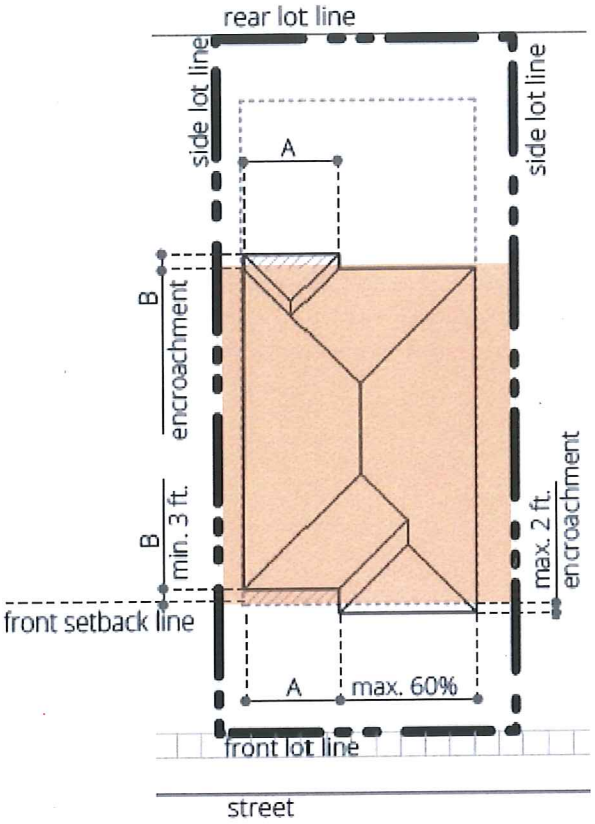

Attachment: Curtis Wilson Letter (5950 : Ordinance - No-Build Vertical Envelope)

July 27, 2022

Ms. Amanda Copeland
City Clerk
City of Nichols Hills
6407 Avondale Drive
Nichols Hills, OK 73116

RE: City of Nichols Hills Ordinance Amendment – Chapter 50 - Opposition

Ms. Copeland;

I am sending this letter to notify the City of Nichols Hills that I would like to protest the proposed Nichols Hills City Code Ordinance amending Chapter 50 regarding the No-Build Vertical Envelope. As a young and new homeowner within the Nichols Hills community, I believe this ordinance to have significant potential for impacting my property and others in the zoning code R-1-60.

One of the biggest reasons we opted for a remodel rather than knocking down the house in its entirety and starting fresh was that we wanted to maintain the character of both the home and the surrounding houses (something that far too many developer-led projects fail to do). I see this ordinance amendment as negatively affecting my family's ability to grow within our home while still maintaining the design intent that was established with the original home design. I understand and agree with the what the ordinance is attempting to do in spirit but believe that the actual mechanics of the regulation will be unduly burdensome to those of us who "inherited" a more historic exterior design.

I hope that more consideration be made on the No-Build Vertical Envelope so as to avoid the inevitable "wedding cake" tiered design and design limitation it will create for us small owners as we continue to invest in our existing homes and properties—often to simply keep some parity with the ever-growing new builds that often take little to no considerations for the spirit and character of the street and neighbors adjoining their project.

I ask for a hold and non-approval of this Ordinance.

Kindest Regards,

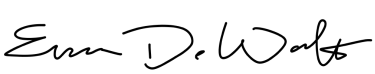

Evan DeWalt
1111 Belford Ave
Nichols Hills, OK 73116

Attachment: Evan DeWalt Letter (5950 : Ordinance - No-Build Vertical Envelope)

July 27, 2022
Ms. Amanda Copeland
City Clerk
City of Nichols Hills
6407 Avondale Drive
Nichols Hills, OK 73116

RE: City of Nichols Hills Ordinance Amendment – Chapter 50 - Opposition

Ms. Copeland;

I am writing to the City of Nichols Hills to formally notify of my protest to the Ordinance amending Chapter 50 of the Nichols Hills City Code regarding the No-Build Vertical Envelope. In particular, the one that will impact my property and others in the zoning code R-1-60.

Having grown up in Nichols Hills in the E-2 District, and subsequently returning to the City with the birth of our first child, I have a strong attachment to this neighborhood and the architecture of the older homes in our area. Our house at 1111 Belford Avenue is the first we have ever owned, and we did a significant renovation to the property. I believe our renovation kept the spirit of our home intact, and several of our neighbors who are longtime residents of the City have agreed. I have been disheartened particularly by much of the new construction and major additions that have occurred nearby in recent years (the home directly to our East as an example). For that reason, I do understand what I believe is the good intent of the Ordinance. However, I believe the No-Build Vertical Envelope restriction disproportionately affects existing homeowners in my District.

I would like to see more consideration made to this Ordinance language that better supports existing homeowners and clarifies how this will not create a potentially choppy addition to homes on smaller lots in the neighborhood for families that desire to grow with their homes rather than tear them down, in particular as it relates to the side-yard setbacks and the effect this Ordinance could have on the street-facing character of a home.

Because of this, I ask for a hold and non-approval of the Ordinance.

Sincerely,

Julie Ruffin DeWalt
1111 Belford Ave
Nichols Hills, OK 73116

Attachment: Julie Dewalt Letter (5950 : Ordinance - No-Build Vertical Envelope)

CITY OF NICHOLS HILLS

NOTICE OF PUBLIC HEARINGS
CITY OF NICHOLS HILLS, OKLAHOMA
CASE NO. PC-2022-03

Notice is hereby given that AT&T, represented by CRB for Nexius, has filed an application ("the Application") with the City of Nichols Hills, Oklahoma for approval of a special permit for the following described property:

> Existing water tower located at the 1009 Northwest 75th Street in Nichols Hills, Oklahoma.

The zoning of this property is "C-1" Office. The Application requests a special permit to replace and/or add new antennas and other equipment for AT&T, to be located on or adjacent to the water tower owned by the City of Nichols Hills, Oklahoma. The Application and supporting documentation may be inspected in the office of the City Clerk during regular business hours.

The Application will be considered at public hearings to be held by the Nichols Hills Planning Commission on Tuesday, August 2, 2022 at 5:30 p.m., and by the Nichols Hills City Council on Tuesday, August 9, 2022 at 5:30 p.m. These public hearings will be held in the Council Chambers at Nichols Hills City Hall, 6407 Avondale Drive, Nichols Hills, Oklahoma, 73116.

Any person may address the Nichols Hills Planning Commission and Nichols Hills City Council at the public hearings. Written support for or protest against the proposed special permit may be mailed or hand-delivered to the City Clerk at 6407 Avondale Drive, Nichols Hills, Oklahoma, 73116. Written support or protests must be received by the City Clerk not less than three (3) days before the public hearing.

Attachment: PC-2022-03 Packet (5952 : AT&T - Special Permit Application)

The following map shows the area affected by the Application:

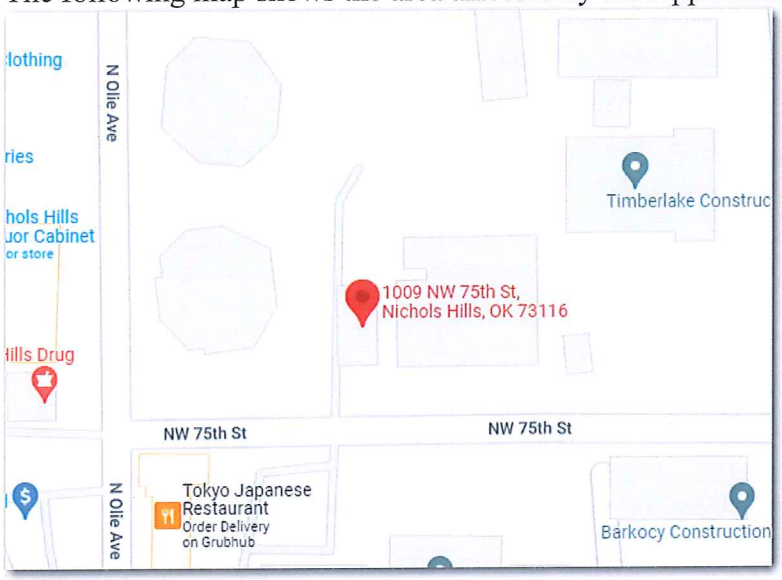

Dated this 19th day of July, 2022.

Amanda Copeland

Amanda Copeland, City Clerk
City of Nichols Hills, Oklahoma

Attachment: PC-2022-03 Packet (5952 : AT&T - Special Permit Application)

CITY OF NICHOLS HILLS, OKLAHOMA

Application for Special Permit
Communication Device

Staff use only
Case # _____
Date filed _____
Fee receipt # _____

Twelve original sets and one electronic version of this completed application (including 12 original sets of the required attachments listed below) and the required fee should be submitted to the Nichols Hills City Clerk, 6407 Avondale Drive, Nichols Hills, Oklahoma 73116.

Applicant is encouraged to consult Sec. 50-127, *Communications Tower and Antenna Regulations,* of the Nichols Hills City Code when completing this Application. Note that Sec. 50-127 does not require a special permit for all communication devices.

This Application requires recommendation for approval by the Nichols Hills Planning Commission and approval of the Nichols Hills City Council.

Attach a separate sheet to provide complete answers if necessary.

Applicant's name: CRB for Nexius on behalf of AT+T

Primary contact: Lynn Ridener

Mailing address: 1900 NW Expressway Suite 800 OKC, OK 73118

Telephone number(s): 580-302-1741

Email address(es): Lynn.Ridener@branchcomm.net

This is an application to: [check all that apply]

- ☐ Construct a communication tower
- ☐ Locate an at-grade dish antenna(s) with a diameter exceeding two meters
- ☐ Locate an antenna or antenna array within a structure as an architectural element
- ☐ Install an additional antenna(s) or antenna array on an existing communications tower, sign structure, or municipal water tower
- ☐ Replace an antenna(s) or antenna array on an existing communications tower, sign structure, or municipal water tower
- ☐ Use the City's utility pole(s) (traffic signal poles, street light poles, and flag poles) associated with a distributed antenna system

Address or descriptive location of proposed device(s) [1]: 1009 Northwest 75th

The following must be attached to this Application:

1. **Proof of authority.** Proof of applicant's authority to make this Application as to the property for which the special permit is desired by attaching a copy of the applicable deed evidencing applicant's ownership, a copy of the applicable lease evidencing applicant's leasehold interest, or an affidavit regarding ownership (a form for which is attached to this Application).

2. **Survey and site map.** Certified survey and detailed site map.

[1] If metes and bounds description, please attach.

Attachment: PC-2022-03 Packet (5952 : AT&T - Special Permit Application)

3. **Project plans.** Detailed and certified project plans.

4. **Structural engineer review.** If a tower or architectural element is included, certified review by a licensed structural engineer.

5. **Scope of proposed work.** A narrative of the need for the proposed device(s) and proposed scope of work in non-technical language in sufficient detail for analysis by the City's Planning Commission and City Council.

6. **List of Owners of Abutting Property.** A report developed from the current records of the Oklahoma County Assessor and/or the Oklahoma County Clerk within the last 30 days, stating the names, addresses, and contact information for the owners of property abutting the proposed site. If the report is not certified by a licensed and bonded abstractor, Applicant will be responsible for the accuracy and completeness of the information in the report.

This Application will be considered officially submitted and filed only after it is examined by the Director of Public Works and the City Clerk and found to have met the applicable requirements of Sec. 50-127 and those set out in this Application and after the fee of $750 as required by Sec. 50-327 of the Nichols Hills City Code has been paid. At that time, the City Clerk will set the Application for hearing before the Nichols Hills Planning Commission and the Nichols Hills City Council. Applicant will be advised of the date and time for those hearings. It is highly recommended that applicant attend (or have a representative attend) the hearings and be prepared to answer questions.

The above statements in this Application and all attachments to it are true and correct.

Submitted and agreed to this 18 day of July, 2022.

Signature: Lynn Ridener

Print applicant's full legal name: Lynn Ridener

Print signatory party's title if applicant is a legal entity: _____

Attachment: PC-2022-03 Packet (5952 : AT&T - Special Permit Application)

Form of affidavit regarding ownership

Affidavit

STATE OF _____

COUNTY OF _____

[Full legal name], being first duly sworn, stated:

1. My name is ***[full legal name]***. My address is ***[full address]***. I am over the age of 18. I am a resident of the State of ***[state]***. I have personal knowledge of the matters stated in this Affidavit.

2. I am the applicant for a special permit for a communication device pursuant to the Nichols Hills City Code.

3. I am the current and legal owner of the property in the City of Nichols Hills with the address of ***[insert address]*** and more particularly described as:

[Insert legal description]

4. This address and legal description accurately describe the property for which the special permit for a communication device is requested.

I declare to the best of my knowledge and belief that the information in this Affidavit is true, correct, and complete.

Executed this _____ day of _____, 202___.

_____
[Full legal name]

Notary Acknowledgment

Subscribed and sworn to before me this _____ day of _____, 202___.

_____
Notary Public

My Commission Expires: _____
Comm. No. _____

This conveyance was approved on the _____ day of _____, 202___, by the City Council of the City of Nichols Hills, Oklahoma, pursuant to the Nichols Hills Subdivision Regulations as adopted by the Nichols Hills City Code.

By: _____
Printed name: _____
Title: _____

Attachment: PC-2022-03 Packet (5952 : AT&T - Special Permit Application)

Market: AR/OK
Cell Site Number: OK1085
Cell Site Name: Nichols Hills
Fixed Asset Number: 10000548

FIRST AMENDMENT TO LEASE AGREEMENT

THIS FIRST AMENDMENT TO LEASE AGREEMENT (**"First Amendment"**), dated as of the latter of the signature dates below, is by and between The City of Nichols Hills and Nichols Hills Municipal Authority (the "Authority"), a Municipal Trust, having a mailing address of 6407 Avondale, Nichols Hills, Oklahoma 73116 (the **"Landlord"** or **"City"**) and New Cingular Wireless PCS, LLC, a Delaware limited liabil y company, having a mailing address of 575 Morosogo Drive, Atlanta GA 30324 (**"Tenant"**).

WHEREAS, Landlord and Tenant entered into a Lease Agreement dated February 8, 2011, whereby Landlord leases to Tenant certain Premises, therein described, that are a portion of the Property located at 1009 NW 75th Street, Nichols Hills, Oklahoma 73120 ("**Agreement**"); and

WHEREAS, Tenant's use of the Premises is limited to the Antennae Facilities described in Exhibit C to the Agreement; and

WHEREAS, City ordinances require Tenant to obtain approval of the City prior to adding any Antennae Facilities beyond those described in Exhibit C to the Agreement; and

WHEREAS, Landlord and Tenant desire to amend the Agreement to allow for the installation of additional antennas, associated cables and other communications instruments; and

WHEREAS, Landlord and Tenant desire to adjust the rent in conjunction with the modifications to the Agreement contained herein; and

WHEREAS, Landlord and Tenant desire to amend the Agreement to modify the notice section thereof; and

WHEREAS, Landlord and Tenant, in their mutual interest, wish to amend the Agreement as set forth below accordingly.

NOW THEREFORE, in consideration of the foregoing and other good and valuable consideration, the receipt and sufficiency of which are hereby acknowledged, Landlord and Tenant agree as follows:

1. **Additional Antennas.** In addition to those antennas described in Exhibit C to the Agreement, Landlord consents to the installation and operation of additional antennas, associated cables and equipment as more completely described on attached Exhibit 1-C. Landlord's execution of this Amendment will signify Landlord's approval of Exhibit 1-C. Exhibit 1-C hereby replaces page 1 of Exhibit C to the Agreement.

Amendment
to
original lease

Attachment: PC-2022-03 Packet (5952 : AT&T - Special Permit Application)

2. **Rent.** Commencing on June 1, 2016, Rent shall be increased by Four Thousand Eight Hundred and No/100 Dollars ($4,800.00) per year (increasing the total current rent to $40,627.02 per year), subject to further adjustments and escalation factors as provided in the Agreement.

3. **Notices.** Section 29 of the Agreement is hereby deleted in its entirety and replaced with the following:

NOTICES. All notices, requests, and demands hereunder will be given by first class certified or registered mail, return receipt requested, or by a nationally recognized overnight courier, postage prepaid, to be effective when properly sent and received, refused or returned undelivered. Notices will be addressed to the parties as follows.

If to Tenant: New Cingular Wireless PCS, LLC
By: AT&T Mobility Corporation,
Attn: Network Real Estate Administration
Re: Cell Site #:OK1085, Cell Site Name: Nichols Hills (OK)
FA No: 10000548
575 Morosogo Drive
Atlanta, GA 30324

With the required copy of legal notice sent to Tenant at the address above, a copy to the Legal Department: New Cingular Wireless PCS, LLC
Attn: Legal Department,
Re: Cell Site #:OK1085, Cell Site Name: Nichols Hills (OK)
FA No: 10000548
208 S. Akard Street
Dallas, TX 75202-4206

A copy sent to the Legal Department is an administrative step which alone does not constitute legal notice.

If to Landlord: City Manager
6407 Avondale Dr.
Nichols Hills, OK 73116

With the required copy of legal notice sent to Landlord at the address above, a copy to the Legal Department: Kendall Parrish
Ron Comingdeer & Associates
6011 N. Robinson
Oklahoma City, OK 73118

Either party hereto may change the place for the giving of notice to it by thirty (30) days prior written notice to the other as provided herein.

Attachment: PC-2022-03 Packet (5952 : AT&T - Special Permit Application)

5. **Other Terms and Conditions Remain.** In the event of any inconsistencies between the Agreement and this First Amendment, the terms of this First Amendment shall control. Except as expressly set forth in this First Amendment, the Agreement otherwise is unmodified and remains in full force and effect. Each reference in the Agreement to itself shall be deemed also to refer to this First Amendment.

6. **Capitalized Terms.** All capitalized terms used but not defined herein shall have the same meanings as defined in the Agreement.

IN WITNESS WHEREOF, the parties have caused their properly authorized representatives to execute and seal this First Amendment on the dates set forth below.

"LANDLORD"
City of Nichols Hills
By: E. Peter Hoffman Jr
Name: E. Peter Hoffman Jr.
Title: Mayor
Date: April 12, 2016

Nichols Hills Municipal Authority
By: E. Peter Hoffman Jr
Name: E. Peter Hoffman Jr.
Title: Chairman.
Date: April 12, 2016

"TENANT"
New Cingular Wireless PCS, LLC
By: AT&T Mobility Corporation
Its: Manager
By: [signature]
Name: Michael Bridwell
Title: Area Manager, C&E, AR/OK
Date: 4/8/16

Attachment: PC-2022-03 Packet (5952 : AT&T - Special Permit Application)

TENANT ACKNOWLEDGEMENT

STATE OF MO)
)ss:
COUNTY OF ST LOUIS)

On the 8th day of April, 201_ before me personally appeared Michael Bridwell, and acknowledged under oath that he is the Area Manager, RE & C, AR/OK of New Cingular Wireless PCS LLC, the limited liability company named in the attached instrument, and as such was authorized to execute this instrument on behalf of the limited liability company.

ANTOINETTE ANN SAMPSON
Notary Public - Notary Seal
STATE OF MISSOURI
Commissioned for St. Louis County
My Commission Expires: October 13, 2019
Commission # 15698277

Notary Public: Antoinette Ann Sampson
My Commission Expires: 10-13-19

LANDLORD ACKNOWLEDGEMENT

STATE OF Oklahoma)
) ss:
COUNTY OF Oklahoma)

BE IT REMEMBERED, that on this 12th day of April, 2016 before me, the subscriber, a person authorized to take oaths in the State of Oklahoma, personally appeared Mayor E. Peter Hoffman, Jr. who, being duly sworn on his/her/their oath, deposed and made proof to my satisfaction that he/she/they is/are the person(s) named in the within instrument; and I, having first made known to him/her/them the contents thereof, he/she/they did acknowledge that he/she/they signed, sealed and delivered the same as his/her/their voluntary act and deed for the purposes therein contained.

Kelli C Hort
Notary Public: ~~11/13/2018~~ 14010539
My Commission Expires: 11/18/18

KELLI C HORT
NOTARY
14010539
EXP. 11/18/18
PUBLIC
STATE OF OKLAHOMA

STATE OF Oklahoma)
) ss:
COUNTY OF Oklahoma)

BE IT REMEMBERED, that on this 12th day of April, 2016 before me, the subscriber, a person authorized to take oaths in the State of Oklahoma, personally appeared Chairman E. Peter Hoffman, Jr. who, being duly sworn on his/her/their oath, deposed and made proof to my satisfaction that he/she/they is/are the person(s) named in the within instrument; and I, having first made known to him/her/them the contents thereof, he/she/they did acknowledge that he/she/they signed, sealed and delivered the same as his/her/their voluntary act and deed for the purposes therein contained.

Kelli C Hort
Notary Public: 14010539
My Commission Expires: 11-18-2018

KELLI C HORT
NOTARY
14010539
EXP. 11/18/18
PUBLIC
STATE OF OKLAHOMA

Attachment: PC-2022-03 Packet (5952 : AT&T - Special Permit Application)

ATTACHMENT 1

MEMORANDUM OF LEASE

Prepared by:
CRB Companies, LLC
Stephanie Wilson
1516 South Boston Ave, Ste 215
Tulsa, OK 74119

Return to:
New Cingular Wireless PCS, LLC
575 Morosogo Drive
Atlanta, GA 30324

Re: Cell Site #OK1085; Cell Site Name: Nichols Hills
Fixed Asset Number: 10000548
State: Oklahoma
County:Oklahoma

MEMORANDUM
OF
LEASE

This Memorandum of Lease is entered into on this ____ day of _____, 20__, by and between The City of Nichols Hills and Nichols Hills Municipal Authority, a Municipal Trust, having a mailing address of 6407 Avondale, Nichols Hills, Oklahoma 73116 ("**Landlord**") and New Cingular Wireless PCS, LLC, a Delaware limited liability company, having a mailing address of 575 Morosogo Drive, Atlanta, GA 30324 ("**Tenant**").

1. Landlord and Tenant entered into a certain Lease Agreement ("**Agreement**") on the 8th day of February, 2011, as amended by that certain First Amendment to Lease Agreement for the purpose of installing, operating and maintaining a communications facility and other improvements. All of the foregoing are set forth in the Agreement.

2. The initial lease term will be five (5) years ("**Initial Term**") commencing on the Effective Date of the Agreement, with two (2) successive two (2) year options to renew.

3. The portion of the land being leased to Tenant (the "**Premises**") is described in **Exhibit 1** annexed hereto.

Attachment: PC-2022-03 Packet (5952 : AT&T - Special Permit Application)

EXHIBIT 1

DESCRIPTION OF PREMISES

to the Memorandum of Lease dated _____ ___, 20__, by and between The City of Nichols Hills and Nichols Hills Municipal Authority, a Municipal Trust, as Landlord, and New Cingular Wireless PCS LLC, a Delaware liability company, as Tenant.

The Premises are described and/or depicted as follows:

SUBJECT TRACT

A tract of land located in Lot 29, 30 and 31, Block 13, COLONIAL HEIGHTS, a part of the NW/4 of Section 4, Township 12 North, Range 3 West, Oklahoma County, Oklahoma, more particularly described as follows Beginning at a point 1 72 feet South and 2 72 feet West of the Northeast corner of Lot 29 of said Block 13, thence East and parallel with the North line of said Lot 29, a distance of 40 07 feet, thence South a distance of 42 39 feet, thence N 89 43'47" W a distance of 50 0 feet, thence North a distance of 25 0 feet to the point of beginning

INGRESS-EGRESS

A 12 feet wide roadway located in Block 13, COLONIAL HEIGHTS, a part of the NW/4 of Section 4, Township 12 North, Range 3 West, Oklahoma County, Oklahoma, with the centerline described as follows Beginning at the Southeast corner of Lot 29, of said Block 13, thence N 00 25'57" W a distance of 78 53 feet, thence in a Northeasterly direction along a curve to the right having a radius of 78 37 feet, a distance of 62 23 feet, thence N 59 41'20"E a distance of 7 42 feet, thence in a Northeasterly direction along a curve to the left having a radius of 51 27 feet, a distance of 53 49 feet, thence N 00 05'23" W a distance of 12 89 feet, thence in a Northwesterly direction along a curve to the left having a radius of 21 57 feet, a distance of 26 21 feet to the end of said 12 feet wide roadway

Attachment: PC-2022-03 Packet (5952 : AT&T - Special Permit Application)

EXHIBIT 1-C

Description of Antenna Facilities

12 antenna
12 Tower Mounted Amplifiers
9 Remote Radio Units
2 Surge Suppressors
12 runs of 1-5/8" Coax
4 runs of ¾" Power
2 runs of ½" Fiber
1 run of 3/8" Control Cable

Plus all ground equipment that will be kept within Tenant's 12' x 20' lease area adjacent to the Water Tower.

Attachment: PC-2022-03 Packet (5952 : AT&T - Special Permit Application)

Notes:

1. THIS EXHIBIT MAY BE REPLACED BY A LAND SURVEY AND/OR CONSTRUCTION DRAWINGS OF THE PREMISES ONCE RECEIVED BY TENANT.
2. ANY SETBACK OF THE PREMISES FROM THE PROPERTY'S BOUNDARIES SHALL BE THE DISTANCE REQUIRED BY THE APPLICABLE GOVERNMENTAL AUTHORITIES.
3. WIDTH OF ACCESS ROAD SHALL BE THE WIDTH REQUIRED BY THE APPLICABLE GOVERNMENTAL AUTHORITIES, INCLUDING POLICE AND FIRE DEPARTMENTS.
4. THE TYPE, NUMBER AND MOUNTING POSITIONS AND LOCATIONS OF ANTENNAS AND TRANSMISSION LINES ARE ILLUSTRATIVE ONLY. ACTUAL TYPES, NUMBERS AND MOUNTING POSITIONS MAY VARY FROM WHAT IS SHOWN ABOVE.

Cell Site No: 10000548 / 4965 NICHOLS HILL_WS-41281.1
FA No: 10000548
Site Address: 1009 N.W. 75th Street, Oklahoma City, OK 73116

LEASE AGREEMENT

THIS LEASE entered into as of this 8th day of February, 2011, by and between The City of Nichols Hills and Nichols Hills Municipal Authority, a Municipal Trust having their principal offices at 6407 Avondale, Nichols Hills, Oklahoma 73116 (the "Landlord" or "City"), and New Cingular Wireless PCS, LLC, a Delaware limited liability company, having a mailing address at 12555 Cingular Way, Suite 1300, Alpharetta, GA 30004 (the "Tenant").

Recitals

A. Landlord is the owner in fee simple of a parcel of land located at 1009 N.W. 75th Street in the City of Oklahoma City, Oklahoma County, State of Oklahoma, whose legal description is set forth on the attached Exhibit A (the "Owned Premises") and on which there is located a water tower owned by Landlord ("Water Tower").

B. Tenant desires to lease a portion of the Owned Premises consisting of approximately 220 square feet (the "Leased Premises") together with certain positions on the space on the Water Tower described below and a right-of-way thereto for the installation and operation of certain antennae facilities, which include directional antennae, connecting cables and appurtenances (collectively, "Antennae Facilities") for use in connection with Tenant's communications business. The description and location of the Leased Premises and the Antennae Facilities are more specifically described in Exhibits B and C attached hereto and made a part hereof.

C. Accordingly, the parties are entering into this Lease on the terms and conditions set forth below.

Agreement

In consideration of their mutual covenants, the parties agree as follows:

1. Leased Premises. Landlord leases to Tenant and Tenant leases from Landlord a portion of the Owned Premises, consisting of Leased Premises, as shown on the Site Plan attached as Exhibit B and described more fully below, and certain space on the Water Tower for the purpose of installing, maintaining, repairing, replacing and operating Tenant's Antennae Facilities as described more fully on the attached Exhibit C. Tenant may not add additional equipment and/or antennae from that shown on Exhibit C without the prior written approval of the Landlord.

Landlord reserves the right to require Tenant to relocate its facilities to another location on the Water Tower, provided that Tenant's use of the Leased Premises is not adversely impacted by any such relocation. Tenant shall complete the relocation of its facilities at Tenant's expense and within a reasonable time after written notice from Landlord.

ORIGINAL LEASE

Attachment: PC-2022-03 Packet (5952 : AT&T - Special Permit Application)

Cell Site No: 10000548 / 4965 NICHOLS HILL_WS-41281.1
FA No: 10000548
Site Address: 1009 N.W. 75th Street, Oklahoma City, OK 73116

Landlord grants to Tenant the non-exclusive right and easement during the term of this Lease for ingress and egress on foot or by motor vehicle, including trucks, and for the installation and maintenance of utility wires, cable conduits and pipes over, under, or along the twenty foot (20') right of way extending from the nearest public right of way, which is known as N.W. 75th Street to the Leased Premises, as such right of way is shown on Exhibit B hereto. Tenant shall have the right to install utilities, at Tenant's expense, and to remove present utilities on the Leased Premises (including but not limited to the installation of emergency power generators). In the event any public utility is unable or unwilling to use the aforementioned right of way, Landlord hereby agrees to grant an additional right of way to Tenant at no additional cost to Tenant.

2. Relocation. Notwithstanding any provision in this Lease to the contrary, Landlord shall have the right, at any time (and from time to time) during the term of this Lease, to relocate the Water Tower at Landlord's expense. Landlord shall provide Tenant ninety (90) days advance notice of its intent to relocate the Water Tower.

3. Term.

a. This Lease shall commence on October 1, 2013 (the "Commencement Date") and end on September 30, 2018 (the "Initial Term"). Upon expiration of the Initial Term, this Lease may be renewed for two (2) additional terms of two (2) years each (each a "Renewal Term"), unless Tenant provides Landlord notice of intention not to renew not less than ninety (90) days prior to the expiration of the then-current Initial Term or Renewal Term. Notwithstanding the foregoing, Landlord may terminate this Lease at any time upon twelve (12) months prior written notice to Tenant.

b. Landlord may terminate this Lease at any time following the adoption by the State or Federal government of a law, rule, regulation or decision to the effect that due (in whole or in part) to a landlord having entered into a lease such as this one, the landlord is required to allow additional antennas or towers (of any sort or description) on its property. **In addition to the foregoing right to terminate this Lease, Landlord has the right, without any further liability, to terminate all of Tenant's rights to the Premises upon not less than sixty (60) days prior written notice to Tenant if:**

(1) Landlord is prohibited by any governmental entity from continued use of the Owned Premises during the term of this Lease;

(2) Landlord's right to control or occupy the Owned Premises is terminated due to causes beyond its control;

(3) After October 1, 2017, Landlord determines that the Leased Premises is needed for public purposes and no other location will reasonably fulfill such a need.

4. Rent.

Attachment: PC-2022-03 Packet (5952 : AT&T - Special Permit Application)

Cell Site No: 10000548 / 4965 NICHOLS HILL_WS-41281.1
FA No: 10000548
Site Address: 1009 N.W. 75th Street, Oklahoma City, OK 73116

a. Tenant shall pay Landlord as annual rent for the Leased Premises the sum of Thirty-Three Thousand Seven Hundred Seventy and 40/100 Dollars ($33,770.40) ("Base Rent"). Tenant shall pay Landlord Base Rent for the first year on the Commencement Date of this Lease. Tenant shall pay Landlord Base Rent annually in advance on each anniversary of the Commencement Date. Base Rent shall be increased annually as described hereafter.

b. Tenant shall pay Landlord a late payment charge equal to five percent (5%) of the late payment for any payment not paid when due. Any amounts not paid when due shall bear interest until paid at the lesser of the rate of three percent (3%) per month or the highest rate permitted by law.

c. In addition, upon execution of this Lease by Tenant, Tenant shall reimburse Landlord for its reasonable costs and expenses, including legal fees, incurred by Landlord in connection with the negotiation and preparation of this Lease not to exceed $1,500.00.

d. The Base Rent shall be increased annually effective as of each anniversary of the Commencement Date by three percent (3.0%).

e. If this Lease is terminated at a time other than on the last day of the month, Rent shall be prorated as of the date of termination and, in the event of termination for any reason other than Tenant's default, all prepaid Rents shall be refunded to the Tenant.

g. Base Rent and all other consideration to be paid or provided by Tenant to Landlord shall constitute "Rent" hereunder and shall be paid or provided without offset.

5. Intentionally Left Blank.

6. Use of Leased Premises.

a. Tenant shall use the Leased Premises for the installation, operation, repair, replacement and maintenance of commercial mobile radio service, which include a concrete pad approximately eleven feet by twenty feet (11' x 20') in size and a prefabricated equipment shelter not to exceed eleven feet by twenty feet (11' x 20') to be located on such concrete pad for the purpose of installing, maintaining and operating communications equipment. Tenant shall use the Water Tower for the installation, operation and maintenance of Antennae Facilities that are "personal wireless service facilities" as such term is defined in §704 of the Federal Telecommunications Act of 1996, Pub. L. No. 104-104, 110 Stat. 56 (1996), partially codified at 47 U.S.C. § 332(c)(7)(C)(2), and for no other purpose. Landlord may permit others to use other portions of the Water Tower. Pursuant to the preceding Tenant shall install and operate its Antennae Facilities in the manner and of the type described in Exhibit C hereto.

b. Tenant shall, at its expense, comply with all present and future federal, state, and local laws, ordinances, rules and regulations (including laws and ordinances relating to health, radio frequency emissions, other radiation and safety) in connection with the use, operation, maintenance, construction and/or installation of the Antennae Facilities and/or the Leased

Attachment: PC-2022-03 Packet (5952 : AT&T - Special Permit Application)

Premises. Landlord agrees to reasonably cooperate with Tenant in obtaining, at Tenant's expense (including reimbursement of Landlord's reasonable attorney and administrative fees), any federal licenses and permits required for or substantially required by Tenant's use of the Leased Premises.

c. Removal.

(1) The Tenant shall remove the Antennae Facilities from the Leased Premises within thirty (30) days after termination of the Lease. Such removal shall be done in a workmanlike and careful manner and without interference or damage to any other equipment, structures or operations on the Leased Premises, including use of the Leased Premises by Landlord or any of Landlord's assignees or lessees. If, however, Tenant requests permission not to remove all or a portion of the improvements, and Landlord consents to such non-removal, title to the affected improvements shall thereupon transfer to Landlord and the same thereafter shall be the sole and entire property of Landlord, and Tenant shall be relieved of its duty to otherwise remove same.

(2) Upon removal of the improvements (or portions thereof) as provided above in subpart (1), Tenant shall restore the affected area of the Leased Premises to the reasonable satisfaction of Landlord.

(3) All costs and expenses for the removal and restoration to be performed by Tenant pursuant to subparts (1) and (2) above shall be borne by Tenant, and Tenant shall hold Landlord harmless from any portion thereof.

7. Construction Standards. Landlord acknowledges that Tenant has existing Antennae Facilities on the Leased Premises pursuant to a Lease Agreement dated September 23, 2004 between Landlord and Southwestern Bell Wireless LLC, Tenant's predecessor in interest, and that said existing Antennae Facilities have been installed on the Leased Premises in a good and workmanlike manner. Landlord reserves the right to require Tenant to paint the Antennae Facilities in a manner consistent with the color of the Water Tower or to otherwise shield the Antennae Facilities from view.

8. Intentionally Omitted.

9. Equipment Upgrade. Tenant may update or replace the Antennae Facilities from time to time upon prior written notice to Landlord, provided that the replacement facilities are not greater in number or size than the existing facilities and that any change in their location on the Water Tower is approved in writing by Landlord. Tenant shall submit to Landlord a detailed proposal for any change in location for replacement facilities and any supplemental materials as may be requested, for Landlord's evaluation and approval.

Attachment: PC-2022-03 Packet (5952 : AT&T - Special Permit Application)

Cell Site No: 10000548 / 4965 NICHOLS HILL_WS-41281.1
FA No: 10000548
Site Address: 1009 N.W. 75th Street, Oklahoma City, OK 73116

10. Maintenance.

a. Tenant shall, at its own expense, maintain the Leased Premises and any equipment on or attached to the Leased Premises in a safe condition, in good repair and in a manner suitable to Landlord so as not to conflict with the use of the Owned Premises or other leasing of space on the Water Tower by Landlord. Tenant shall not interfere with the use of the Water Tower, the Owned Premises, related facilities or other equipment of other tenants.

b. Tenant shall have sole responsibility for the maintenance, repair, and security of its equipment, personal property, Antennae Facilities, and leasehold improvements, and shall keep the same in good repair and condition during the Lease term.

c. Tenant shall keep the Leased Premises free of debris and anything of a dangerous, noxious or offensive nature or which would create a hazard or undue vibration, heat, noise or interference.

d. In the event the Landlord or any other tenant undertakes painting, construction or other alterations on the Water Tower, Tenant shall take reasonable measures at Tenant's cost to cover Tenant's equipment, personal property or Antennae Facilities and protect such from paint and debris fallout which may occur during the painting, construction or alteration process.

11. Leased Premises Access.

a. Tenant shall have access to the Leased Premises by means reasonably designated by Landlord, subject to notice requirements to Landlord in 11b below.

b. Tenant shall have reasonable access to the Leased Premises in order to install, operate, and maintain its Antennae Facilities. Tenant shall provide Landlord twenty-four (24) hours advance notice, except in an emergency.

c. Landlord shall be allowed and granted access to the Leased Premises at reasonable times to examine and inspect the Leased Premises for safety reasons or to ensure that the Tenant's covenants are being met.

12. Utilities. Tenant shall, at its expense, separately meter charges for the consumption of electricity and other utilities associated with its use of the Leased Premises and the Antennae Facilities and shall timely pay all costs associated therewith.

13. License Fees. Tenant shall pay, as they become due and payable, all governmental fees, charges and taxes levied as a result of Tenant's use of the Leased Premises. Tenant shall pay all governmental fees, charges and taxes required for licenses and/or permits required for Tenant's use of the Leased Premises.

14. Approvals; Compliance with Laws. Tenant's use of the Leased Premises is contingent upon its obtaining all certificates, permits, zoning, and other approvals that may be required by any federal, state

Attachment: PC-2022-03 Packet (5952 : AT&T - Special Permit Application)

or local authority. Tenant shall erect, maintain and operate its Antennae Facilities in accordance with standards, statutes, ordinances, rules and regulations now in effect or that may be issued thereafter by the Federal Communications Commission or any other governing bodies.

15. Interference.

a. Tenant's installation, operation, and maintenance of its Antennae Facilities shall not damage or interfere in any way with Landlord's operations or related repair and maintenance activities or with such activities of other tenants. Tenant agrees to cease all such actions which materially interfere with Landlord's use of the Water Tower or the Owned Premises immediately upon actual notice of such interference, provided however, in such case, Tenant shall have the right to terminate the Lease. Landlord, at all times during this Lease, reserves the right to take any action it deems necessary, in its sole discretion, to repair, maintain, alter or improve the Leased Premises in connection with its operations as may be necessary, including leasing parts of the Water Tower to others.

b. Before Tenant replaces any Antennae Facilities, Landlord may require Tenant to provide any environmental assessment studies required by the Federal Communications Commission and obtain, at Tenant's expense, an interference study indicating whether Tenant's intended use will interfere with any existing communications facilities on the Water Tower.

c. Landlord does not guarantee to Tenant subsequent noninterference with Tenant's communications operations, provided, however, that in the event any other party except a governmental unit, office or agency requests a lease and/or permission to place any type of additional antennae or transmission facility on the Water Tower, the procedures of this paragraph shall govern to determine whether such antennae or transmission facility will interfere with Tenant's transmission operations.

d. If Landlord receives a request to lease space on the Water Tower from additional users, Landlord shall require such additional user to submit a proposal complete with all technical specifications to enable Landlord and Tenant to review such proposed use for noninterference; however, Landlord shall not be required to provide Tenant with any specifications or information claimed to be of a proprietary nature by the third party. The third party shall be responsible for the reasonable cost of preparing the technical specifications for its proposed transmission facility. Tenant shall have thirty (30) days following receipt of said proposal to make any objections thereto, and failure to make any objection within said thirty (30) day period shall be deemed consent by Tenant to the installation of antennae or transmission facilities pursuant to said proposal. If Tenant gives notice of objection due to interference during such 30 day period and Tenant's objections are verified by Landlord to be valid, then Landlord shall not permit the proposal to proceed until the additional user modifies the proposal in a manner determined, in Landlord's reasonable judgment, to adequately reduce the interference. In that case, Landlord may proceed with the proposal. A governmental unit may be allowed to place antennae or other communications facilities on the Water Tower regardless of potential or actual interference with Tenant's use, provided however, if Tenant's use of the Premises is materially affected, Tenant may terminate the Lease without further obligations hereunder.

Attachment: PC-2022-03 Packet (5952 : AT&T - Special Permit Application)

e. Tenant's use and operation of its facilities shall not interfere with the use and operation of other communication facilities on the Water Tower which pre-existed Tenant's facilities. If Tenant's facilities cause interference with such pre-existing facilities, Tenant shall take all measures reasonably necessary to correct and eliminate the interference. If the interference cannot be eliminated in a reasonable time, Tenant shall immediately cease operating its facility until the interference has been eliminated. If the interference cannot be eliminated with 30 days, Landlord may terminate this Lease. If a subsequent user interferes with Tenant's facilities, Landlord shall require the user to take all measures reasonably necessary to correct and eliminate the interference. If the interference cannot be eliminated in a reasonable time, Landlord shall require such user to immediately cease operating its facility until the interference has been eliminated. If the interference cannot be eliminated within sixty (60) days, Tenant may terminate this Lease.

16. Default and Remedies.

a. It shall be a default if either party defaults in the performance of any covenant or condition of this Lease and does not cure such default within thirty (30) days after written notice from the non-defaulting party specifying the default complained of; or if Tenant abandons or vacates the Leased Premises; or if either party is adjudicated as bankrupt or makes any assignment for the benefit of creditors, or becomes insolvent.

b. In the event of a default by Tenant, Landlord shall have the right, at its option, in addition to and not exclusive of any other remedy Landlord may have by operation of law, without any further demand or notice, to re-enter the Leased Premises and eject all persons therefrom, and terminate this Lease in which event all amounts currently due hereunder shall become immediately due and payable. Landlord shall make its best efforts to relet the Leased Premises, or any part thereof, upon such terms and conditions as Landlord may deem advisable, and any monies received from such reletting shall be applied first to the expenses of such reletting and collection, including reasonable attorneys' fees, any real estate commissions paid, and thereafter toward payment of all sums due to Landlord hereunder. If a sufficient sum shall not be realized to pay such sums and other charges, Landlord may bring an action to collect any amounts not paid by Tenant hereunder.

c. No re-entry and taking of possession of the Leased Premises by Landlord shall be construed as an election on Landlord's part to terminate this Lease, regardless of the extent of renovations and alterations by Landlord, unless a written notice of such intention is given to Tenant by Landlord. Notwithstanding any reletting without termination, Landlord may at any time thereafter elect to terminate this Lease for such previous breach.

d. If suit shall be brought by Landlord for recovery of possession of the Leased Premises, for the recovery of any rent or any other amount due under the provisions of this Lease, or by either party because of the breach of any other covenant, the breaching party shall pay to the non-breaching party all expenses incurred therefor, including reasonable attorney fees.

Attachment: PC-2022-03 Packet (5952 : AT&T - Special Permit Application)

Cell Site No: 10000548 / 4965 NICHOLS HILL_WS-41281.1
FA No: 10000548
Site Address: 1009 N.W. 75th Street, Oklahoma City, OK 73116

17. Cure by Landlord. In the event of any default of this Lease by Tenant, the Landlord may at any time, after notice, cure the default for the account of and at the expense of the Tenant. If Landlord is compelled to pay or elects to pay any sum of money or to do any act which will require the payment of any sum of money or is compelled to incur any expense, including reasonable attorney fees in instituting, prosecuting or defending any action to enforce the Landlord's rights under this Agreement, the sums so paid by Landlord, with all interest, costs and damages shall be deemed to be Base Rent and shall be due from the Tenant to Landlord on the first day of the month following the incurring of the respective expenses.

18. Optional Termination.

a. This Lease may be terminated (i) by Tenant if it is unable to obtain or maintain any license, permit, or other governmental approval necessary for the construction and/or operation of the Antennae Facilities or Tenant's business; (ii) by Landlord if the Landlord decides, in its sole discretion and for any reason, to discontinue use of the Water Tower; (iii) by Landlord if it determines, in its sole discretion and for any reason, that the Water Tower is structurally unsound or otherwise not suitable for Tenant's use, including but not limited to consideration of age of the structure, damage or destruction of all or part of the Water Tower from any source, or factors relating to the condition of the Water Tower; (iv) by Landlord if it determines in its sole discretion that continued use of the Water Tower by Tenant is in fact a threat to health, safety or welfare or violates applicable laws or ordinances; or (v) by Landlord at its sole discretion if Tenant loses its license to provide PCS/cellular service for any reason, including, but not limited to, nonrenewal or cancellation of its license.

b. Upon termination of this Lease for any reason, Tenant shall remove its equipment, personal property, Antennae Facilities, and leasehold improvements from the Leased Premises as required by Section 6c(1) hereof, and shall repair any damage to the Premises caused by such equipment, normal wear and tear excepted; all at Tenant's sole cost and expense. Any such property or facilities which are not removed pursuant to the requirements of Section 6c(1) hereof shall become the property of Landlord.

19. Liquidated Damages: Termination. Notice of Tenant's termination pursuant to paragraph 18 shall be given to Landlord in writing by certified mail, return receipt requested, and shall be effective upon receipt of such notice. All rentals paid for the Lease of the Leased Premises prior to said termination date shall be retained by Landlord. Upon such termination, this Lease shall become null and void and the parties shall have no further obligations to each other, except that rental payments to the Landlord shall continue as liquidated damages for the remainder of the contract year in which such termination occurs.

20. Alteration, Damage or Destruction. If the Water Tower or any portion thereof is altered, destroyed or damaged so as to materially hinder effective use of the Antennae Facilities through no fault or negligence of Tenant, Tenant may elect to terminate this Lease upon thirty (30) days' written notice to Landlord. In such event, Tenant shall promptly remove the Antennae Facilities from the Leased Premises and shall restore the Leased Premises to the same condition as existed prior to this Lease, normal wear and tear and damage from the foregoing casualty excepted. This Lease (and Tenant's

Attachment: PC-2022-03 Packet (5952 : AT&T - Special Permit Application)

obligation to pay rent) shall terminate upon Tenant's fulfillment of the obligations set forth in the preceding sentence, at which termination Tenant shall be entitled to the reimbursement of any Rent prepaid by Tenant. Landlord shall have no obligation to repair any damage to any portion of the Leased Premises.

21. Condemnation. In the event the Owned Premises are taken by eminent domain, this Lease shall terminate as of the date title to the Owned Premises vests in the condemning authority. In the event any portion of the Leased Premises is taken by eminent domain, either party shall have the right to terminate this Lease as of said date of title transfer, by giving thirty (30) days' written notice to the other party. In the event of any taking under the power of eminent domain, Tenant shall not be entitled to any portion of the reward paid for the taking and the Landlord shall receive full amount of such award. Tenant hereby expressly waives any right or claim to any portion thereof although all damages, whether awarded as compensation for diminution in value of the leasehold or to the fee of the Leased Premises, shall belong to Landlord. Tenant shall have the right to claim and recover from the condemning authority, but not from Landlord, such compensation as may be separately awarded or recoverable by Tenant on account of any and all damage to Tenant's business and any costs or expenses incurred by Tenant in moving/removing its equipment, personal property, Antennae Facilities, and leasehold improvements.

22. Indemnity and Insurance.

a. Disclaimer of Liability: Landlord shall not at any time be liable for injury or damage occurring to any person or property from any cause whatsoever arising out of Tenant's construction, maintenance, repair, use, operation, condition or dismantling of the Leased Premises or Tenant's Antennae Facilities, excepting such injury or damage as may be attributable to the acts or omissions of Landlord, its agents, servants or contractors.

b. Indemnification: Tenant shall, at its sole cost and expense, indemnify and hold harmless Landlord, its respective officers, boards, commissions, employees, agents, attorneys, and contractors, elected or appointed, (hereinafter referred to as "Indemnitees"), from and against:

i. Any and all liability, obligation, damages, penalties, claims, liens, costs, charges, losses and expenses (including, without limitation, reasonable fees and expenses of attorneys), which may be imposed upon, incurred by or be asserted against the Indemnitees by reason of any act or omission of Tenant, its personnel, employees, agents, contractors or subcontractors, resulting in personal injury, bodily injury, sickness, disease or death to any person or damage to, loss of or destruction of tangible or intangible property, invasion of privacy and unauthorized use of any trademark, trade name, copyright, patent, service mark or any other right of any person, firm or corporation, which may arise out of or be in any way connected with the construction, installation, operation, maintenance, use or condition of the Leased Premises or Tenant's Antennae Facilities or the Tenant's failure to comply with any federal, state or local statute, ordinance or regulation.

Attachment: PC-2022-03 Packet (5952 : AT&T - Special Permit Application)

ii. Any and all liabilities, obligations, damages, penalties, claims, liens, costs, charges, losses and expenses (including, without limitation, reasonable fees and expenses of attorneys, expert witnesses and other consultants), which are imposed upon, incurred by or asserted against the Indemnitees by reason of any claim or lien arising out of work, labor, materials or supplies provided or supplied to Tenant, its contractors or subcontractors, for the installation, construction, operation, maintenance or use of the Leased Premises or Tenant's Antennae Facilities, and, upon the written request of Landlord, Tenant shall cause such claim or lien covering Landlord's property to be discharged or bonded within thirty (30) days following such request.

c. Assumption of Risk: Tenant undertakes and assumes for its officers, agents, affiliates, contractors and subcontractors and employees (collectively "Tenant" for the purpose of this section), all risk of dangerous conditions, if any, on or about the Owned Premises or the Water Tower, and Tenant hereby agrees to indemnify and hold harmless the Indemnitees against and from any claim asserted or liability imposed upon the Indemnitees for personal injury or property damage to any person (other than from Indemnitee's gross negligence) arising out of the Tenant's installation, operation, maintenance, condition or use of the Leased Premises or Tenant's Antennae Facilities or Tenant's failure to comply with any federal, state or local statute, ordinance or regulation.

d. Defense of Indemnitees: In the event any action or proceeding shall be brought against the Indemnitees by reason of any matter for which the Indemnitees are indemnified hereunder, Tenant shall, upon notice from any of the Indemnitees, at Tenant's sole cost and expense, resist and defend the same; provided however, that Tenant shall not admit liability in any such matter on behalf of the Indemnitees without the written consent of Landlord and provided further that Indemnitees shall not admit liability for, nor enter into any compromise or settlement of, any claim for which they are indemnified hereunder, without the prior written consent of Tenant.

e. Notice, Cooperation and Expenses: Landlord shall give Tenant prompt notice of the making of any claim or the commencement of any action, suit or other proceeding covered by the provisions of the preceding paragraph. Nothing herein shall be deemed to prevent Landlord from cooperating with Tenant and participating in the defense of any litigation by Landlord's own counsel. Tenant shall pay all expenses incurred by Landlord in response to any such actions, suits or proceedings. These expenses shall include all out-of-pocket expenses such as attorney fees and shall also include the reasonable value of any services rendered by the Landlord's attorney, and the actual expenses of Landlord's agents, employees or expert witnesses, and disbursements and liabilities assumed by Landlord in connection with such suits, actions or proceedings but shall not include attorneys' fees for services that are unnecessarily duplicative of services provided Landlord by Tenant.

If Tenant requests Landlord to assist it in such defense then Tenant shall pay all expenses incurred by Landlord in response thereto, including defending itself with regard to any such actions, suits or proceedings. These expenses shall include all out-of-pocket expenses such as attorney fees and shall also include the costs of any services rendered by the Landlord's attorney,

Attachment: PC-2022-03 Packet (5952 : AT&T - Special Permit Application)

and the actual expenses of Landlord's agents, employees or expert witnesses, and disbursements and liabilities assumed by Landlord in connection with such suits, actions or proceedings.

f. Insurance: During the term of the Lease, Tenant shall maintain, or cause to be maintained, in full force and effect and at its sole cost and expense, the following types and limits of insurance:

i. Worker's compensation insurance meeting applicable statutory requirements and employer's liability insurance with minimum limits of One Million Dollars ($1,000,000) for each accident.

ii. Comprehensive commercial general liability insurance with minimum limits of Five Million Dollars ($5,000,000) as the combined single limit for each occurrence of bodily injury, personal injury, death and property damage. The policy shall provide blanket contractual liability insurance for all written contracts, and shall include coverage for products and completed operations liability, independent contractor's liability; coverage for property damage from perils of explosion, collapse or damage to underground utilities, commonly known as XCU coverage.

iii. Liability insurance for sudden and accidental environmental contamination with minimum limits of Five Million Dollars ($5,000,000) and providing coverage for claims discovered within three (3) years after the term of the policy.

iv. Automobile liability insurance covering all owned, hired, and nonowned vehicles in use by Tenant, its employees and agents, with personal protection insurance and property protection insurance to comply with the provisions of state law with minimum limits of Two Million Dollars ($2,000,000) as the combined single limit for each occurrence for bodily injury and property damage.

v. Business interruption insurance coverage in an amount sufficient to cover such loss of revenues, for the period of time which it would take, under normal circumstances, to repair or replace that part(s) of the Antennae Facilities which is damaged and caused the loss of revenue.

vi. The coverage amounts set forth above may be met by a combination of underlying and umbrella policies so long as in combination the limits equal or exceed those stated.

g. Named Insureds: All policies, except for business interruption and worker's compensation policies, shall name Landlord as additional insureds (herein referred to as the "Additional Insureds").

h. Evidence of Insurance: Certificates of insurance for each insurance policy required to be obtained by Tenant in compliance with this paragraph shall be filed and maintained with

Attachment: PC-2022-03 Packet (5952 : AT&T - Special Permit Application)

Landlord annually during the term of the Lease. Tenant shall immediately advise Landlord of any claim or litigation that may result in liability to Landlord.

i. Insurance Companies: All insurance shall be effected under valid and enforceable policies, insured by insurers licensed to do business by the State of Oklahoma or surplus line carriers on the State of Oklahoma Insurance Commissioner's approved list of companies qualified to do business in the State of Oklahoma. All insurance carriers and surplus line carriers shall be rated A+ or better by A.M. Best Company.

j. Contractors: Tenant shall require that each and every one of its contractors and their subcontractors who perform work on the Leased Premises to carry, in full force and effect, workers' compensation, comprehensive public liability and automobile liability insurance coverages of the type but not the same limits which Tenant is required to obtain under the terms of this Lease or in the alternative, Tenant shall require that such contractors and subcontractors be named as additional insured parties on Tenant's insurance policies.

23. Hazardous Substance Indemnification. Tenant represents and warrants that its use of the Premises herein will not generate any hazardous substance, and it will not store or dispose on the Premises nor transport to or over the Premises any hazardous substance. Tenant further agrees to hold Landlord harmless from and indemnify Landlord against any release of any such hazardous substance and any damage, loss, or expense or liability resulting from such release including all attorneys' fees, costs and penalties incurred as a result thereof except any release caused by the negligence of Landlord, its employees or agents. "Hazardous substance" shall be interpreted broadly to mean any substance or material defined or designated as hazardous or toxic waste, hazardous or toxic material, hazardous or toxic or radioactive substance, or other similar term by any federal, state or local environmental law, regulation or rule presently in effect or promulgated in the future, as such laws, regulations or rules may be amended from time to time; and it shall be interpreted to include, but not be limited to, any substance which after release into the environment will or may reasonably be anticipated to cause sickness, death or disease.

24. Holding Over. Any holding over after the expiration of the term hereof, with the consent of the Landlord, shall be construed to be a tenancy from month to month at two times the rents herein specified (prorated on a monthly basis) and shall otherwise be for the term and on the conditions herein specified, so far as applicable.

25. Subordination to Mortgage. Any mortgage now or subsequently placed upon any property of which the Leased Premises are a part shall be deemed to be prior in time and senior to the rights of the Tenant under this Lease. Tenant subordinates all of its interest in the leasehold estate created by this Lease to the lien of any such mortgage. Tenant shall, at Landlord's request, execute any additional documents necessary to indicate this subordination.

26. Intentionally Omitted.

27. Acceptance of Premises. Tenant accepts the Leased Premises in the condition existing as of the Commencement Date. Landlord makes no representation or warranty with respect to the condition of

Attachment: PC-2022-03 Packet (5952 : AT&T - Special Permit Application)

Cell Site No: 10000548 / 4965 NICHOLS HILL_WS-41281.1
FA No: 10000548
Site Address: 1009 N.W. 75th Street, Oklahoma City, OK 73116

the Leased Premises and Landlord shall not be liable for any latent or patent defect in the Leased Premises existing at the Commencement Date of this Lease.

28. Estoppel Certificate. Tenant shall, at any time and from time to time upon not less than ten (10) days prior request by Landlord but in no event more frequently than once per year, deliver to Landlord a statement in writing certifying that (a) the Lease is unmodified and in full force (or if there have been modifications, that the Lease is in full force as modified and identify the modifications); (b) the dates to which rent and other charges have been paid; (c) so far as the person making the certificate knows, Landlord is not in default under any provisions of the Lease, if Landlord is in fact not in default at the time the statement is certified; and (d) such other matters as Landlord may reasonably request.

29. Notices. All notices, requests, demands, and other communications hereunder shall be in writing and shall be deemed given if personally delivered or mailed, certified mail, return receipt requested; to the following addresses:

If to Landlord, to:

City Manager
6407 Avondale Dr.
Nichols Hills, OK 73116

With a copy to:

Kendall Parrish
Comingdeer, Lee & Gooch
6011 N. Robinson
Oklahoma City, OK 73118

If to Tenant, to:

New Cingular Wireless PCS, LLC
Attn: Network Real Estate Administration
Re: Cell Site #: 10000548; Cell Site Name: 4965 NICHOLS HILL (OK)
Fixed Asset No: 10000548
12555 Cingular Way, Suite 1300
Alpharetta, GA 30004

With a copy to:

New Cingular Wireless PCS, LLC
Attn: Legal Department
Re: Cell Site #: 10000548; Cell Site Name: 4965 NICHOLS HILL (OK)
Fixed Asset No: 10000548
15 East Midland Avenue
Paramus, NJ 07652

Attachment: PC-2022-03 Packet (5952 : AT&T - Special Permit Application)

Cell Site No: 10000548 / 4965 NICHOLS HILL_WS-41281.1
FA No: 10000548
Site Address: 1009 N.W. 75th Street, Oklahoma City, OK 73116

30. Assignment.

a. Tenant may assign this Lease to Tenant's parent companies or any affiliate or subsidiary of Tenant or its parent companies, or to any entity with or into which Tenant is merged or consolidated, or to any entity resulting from a reorganization of Tenant or its parent companies. Otherwise, Tenant may not assign this Lease or sublet the Leased Premises without the prior written consent of Landlord.

b. Nothing in this Lease shall preclude Landlord from leasing other space for communications equipment to any person or entity which may be in competition with Tenant, or any other party.

31. Successors and Assigns. This Lease shall be binding upon and inure to the benefit of the parties, their respective successors, personal representatives and assigns.

32. Non-Waiver. Failure of Landlord to insist on strict performance of any of the conditions, covenants, terms or provisions of this Agreement or to exercise any of its rights hereunder shall not waive such rights, but Landlord shall have the rights to enforce such rights at any time and take such action as might be lawful or authorized hereunder, either in law or equity. The receipt of any sum paid by Tenant to Landlord after a breach of this Agreement shall not be deemed a waiver of such breach unless expressly set forth in writing.

33. Taxes.

a. Tenant shall pay all real and personal property taxes (or payments in lieu of taxes) and assessments for the Leased Premises, if any, which become due and payable during the term of this Lease. All such payments shall be made, and evidence of all such payments shall be provided to Landlord, at least ten (10) days prior to the delinquency date of the payment. Tenant shall pay all taxes on its personal property on the Leased Premises.

b. Tenant shall indemnify Landlord from any and all liability, obligation, damages, penalties, claims, liens, costs, charges, losses and expenses (including, without limitation, reasonable fees and expenses of attorneys, expert witnesses and consultants), which may be imposed upon, incurred by or be asserted against Tenant in relation to the taxes owed or assessed on the Leased Premises.

c. If the methods of taxation in effect at the Commencement Date of the Lease are altered so that in lieu of or as a substitute for any portion of the property taxes and special assessments now imposed on property there is imposed a tax upon or against the rentals payable by Tenant to Landlord, Tenant shall pay those amounts in the same manner as provided for the payment of real and personal property taxes.

34. Dispute Resolution.

Attachment: PC-2022-03 Packet (5952 : AT&T - Special Permit Application)

a. Except as otherwise provided in this Lease, any controversy between the parties arising out of this Lease or breach thereof, is subject to the mediation process described below.

b. A meeting will be held promptly between the parties to attempt in good faith to negotiate a resolution of the dispute. Individuals with decision making authority will attend the meeting regarding the dispute. If within twenty (20) days after such meeting the parties have not succeeded in resolving the dispute, they will, within twenty (20) days thereafter submit the dispute to a mutually acceptable third party mediator who is acquainted with dispute resolution methods. Landlord and Tenant will participate in good faith in the mediation and in the mediation process. The mediation shall be nonbinding. Neither party is entitled to seek or recover punitive damages in considering or fixing any award under these proceedings.

c. The costs of mediation, including any mediators fees, and costs for the use of the facilities during the meetings, shall be born equally by the parties. Each parties costs and expenses will be born by the party incurring them.

35. Treatment in Bankruptcy. The parties to this Lease hereby expressly agree and acknowledge that it is the intention of both parties that in the event that during the term of this Lease Tenant shall become a debtor in any voluntary or involuntary bankruptcy proceeding (a "Proceeding") under the United States Bankruptcy Code, 11 U.S.C. § 101, et seq. (The "Code"), this Lease is and shall be treated as an "unexpired lease of nonresidential real property" for purposes of Section 365 of the Code, 11 U.S.C. § 365, and, accordingly, shall be subject to the provisions of subsections (d)(3) and (d)(4) of said Section 365.

36. Force Majeure. If a party is delayed or hindered in, or prevented from the performance required under this Lease (except for payment of monetary obligations) by reason of earthquakes, landslides, strikes, lockouts, labor troubles, failure of power, riots, insurrections, war, acts of God or other reasons of like nature, not the fault of the party delayed in performing work or doing acts, such party is excused from such performance for the period of delay. The period for the performance of any such act shall then be extended for the period of such delay. In the event that Tenant invokes this provision because damage to the Leased Premises has hindered, delayed, or prevented Tenant from using the Premises, Tenant may immediately erect any temporary facilities on the Leased Premises necessary to resume service, provided that such temporary facilities do not unreasonably interfere with Landlord's ability to repair or restore the Leased Premises. If, in Landlord's sole and absolute discretion, it elects to repair or restore the Leased Premises, upon completion of such repair or restoration, Tenant is entitled to repair or rebuild the Tower and/or related facility in accordance with the terms agreed upon in this Lease.

37. Miscellaneous.

a. This Lease is not a franchise pursuant to the Oklahoma Constitution, nor is it a permit to use the rights-of-way of the City of Nichols Hills with the sole exception of the right of way for ingress and egress described in section 1 hereof. Any such franchise or permit must be obtained separately from Landlord.

Attachment: PC-2022-03 Packet (5952 : AT&T - Special Permit Application)

Cell Site No: 10000548 / 4965 NICHOLS HILL_WS-41281.1
FA No: 10000548
Site Address: 1009 N.W. 75th Street, Oklahoma City, OK 73116

b. Landlord and Tenant each represent and warrant to the other that all necessary authorizations and approvals required for execution and performance of this Lease have been given and that the undersigned individual is duly authorized to execute this Lease and bind the party for which it signs.

c. This Lease constitutes the entire agreement and understanding of the parties and supersedes all offers, negotiations, and other agreements of any kind. There are no representations or understandings of any kind not set forth herein. Any modification of or amendment to this Lease must be in writing and executed by both parties.

d. This Lease and performance hereunder shall be governed, interpreted, construed and regulated by the laws of the State of Oklahoma.

e. If any term, covenant, condition or provision of this Lease shall, to any extent, be invalid or unenforceable, the remainder of this Lease shall not be affected thereby, and shall be valid and enforceable to the fullest extent permitted by law.

f. Landlord hereby expressly disclaims all Warranties of Merchantability and Fitness for a Particular Purpose associated with the Premises. Tenant accepts the Leased Premises "as is."

g. Tenant shall use the utmost good faith to apply for, obtain, and keep in full force and effect all certificates, permits, licenses, and approvals affecting Tenant's ability to use the Leased Premises.

h. This Lease may be executed in any number of counterparts, each of which shall be an original, but all of which together shall constitute but one instrument.

i. This Lease does not and shall not be construed to establish or create a partnership, joint venture, franchise or other form of business association between Landlord and Tenant.

This Lease was executed as of the date first set forth above.

LANDLORD:

CITY OF NICHOLS HILLS

_____

By:
Its Mayor

_____

By:

Attachment: PC-2022-03 Packet (5952 : AT&T - Special Permit Application)

Cell Site No: 10000548 / 4965 NICHOLS HILL_WS-41281.1
FA No: 10000548
Site Address: 1009 N.W. 75th Street, Oklahoma City, OK 73116

Its Clerk

TENANT:

New Cingular Wireless PCS, LLC,
a Delaware limited liability company
By: AT&T Mobility Corporation
Its: Manager

By: _____

Name: Kevin L. Lilly

Title: Area Mgr Cte

Attachment: PC-2022-03 Packet (5952 : AT&T - Special Permit Application)

Cell Site No: **10000548 / 4965 NICHOLS HILL_WS-41281.1**
FA No: **10000548**
Site Address: **1009 N.W. 75th Street, Oklahoma City, OK 73116**

EXHIBIT A

LEGAL DESCRIPTION OF OWNED PREMISES

Attachment: PC-2022-03 Packet (5952 : AT&T - Special Permit Application)

EXHIBIT "A"

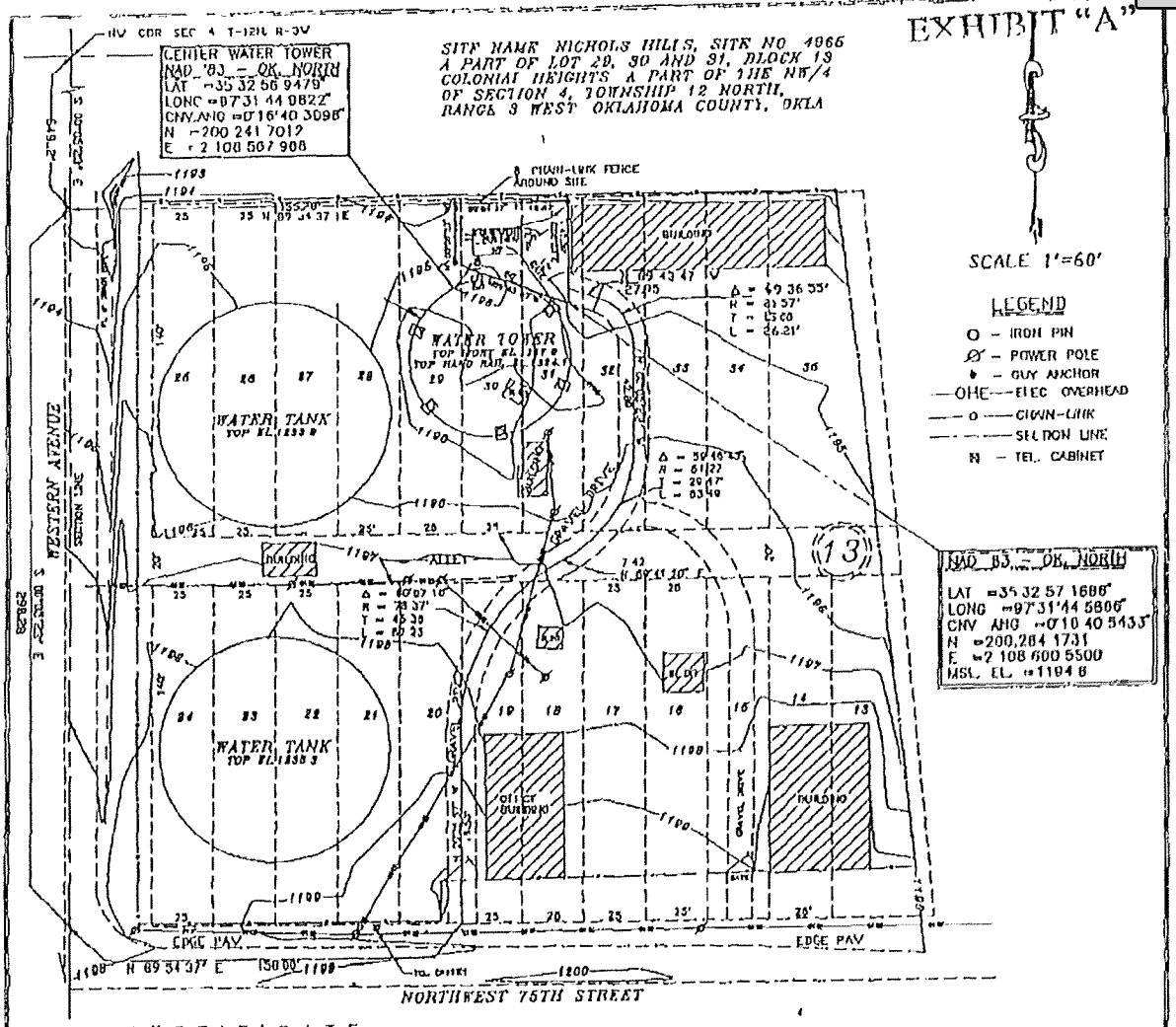

CERTIFICATE

I, Wayne G Guinn, registered land surveyor in the State of Oklahoma, hereby certify that the accompanying plat is a true and correct representation of the survey made of the following described property located in Block 13, COLONIAL HEIGHTS, being a part of the NW/4 of Section 4, Township 12 North, Range 3 West, Oklahoma County.

I, further certify that the referenced point is within the 2–"C" tolerance

SUBJECT TRACT

A tract of land located in Lot 29, 30 and 31, Block 13, COLONIAL HEIGHTS, a part of the NW/4 of Section 4, Township 12 North, Range 3 West, Oklahoma County, Oklahoma, more particularly described as follows Beginning at a point 1 72 feet South and 2 72 feet West of the Northeast corner of Lot 29 of said Block 13, thence East and parallel with the North line of said Lot 29, a distance of 40 87 feet, thence South a distance of 42 39 feet, thence N 89 43'47" W a distance of 50 0 feet, thence North a distance of 25 0 feet to the point of beginning

INGRESS–EGRESS

A 12 foot wide roadway located in Block 13, COLONIAL HEIGHTS, a part of the NW/4 of Section 4, Township 12 North, Range 3 West, Oklahoma County, Oklahoma, with the center–line described as follows Beginning at the Southeast corner of Lot 20, of said Block 13, thence N 00°25'57" W a distance of 78 53 feet, thence in a Northeasterly direction along a curve to the right having a radius of 78 37 feet, a distance of 82 23' feet, thence N 59 41'20"E a distance of 7 42 feet, thence in a Northeasterly direction along a curve to the left having a radius of 51 27 feet, a distance of 53 49 feet, thence N 00 05'23' W a distance of 42 89 feet, thence in a Northwesterly direction along a curve to the left having a radius of 21 57 feet, a distance of 26 21 feet to the end of said 12 foot wide roadway

REGISTERED LAND SURVEYOR
WAYNE G GUINN
L S 789
OKLAHOMA

Wayne G Guinn L S 789

CENTRAL LAND SURVEYING	For CIMARRON LAND SERVICES, INC.		
P O Box 2117 Ada, Okla 74820 Phone (405)436-3455	Drawn by W Guinn	Checked by K Guinn	
	Date 11-08-04	Book No 285	Sheet 1 of 1

Attachment: PC-2022-03 Packet (5952 : AT&T - Special Permit Application)

Cell Site No: **10000548 / 4965 NICHOLS HILL_WS-41281.1**
FA No: **10000548**
Site Address: **1009 N.W. 75th Street, Oklahoma City, OK 73116**

EXHIBIT B

PREMISES PLAN LEASED PREMISES

Attachment: PC-2022-03 Packet (5952 : AT&T - Special Permit Application)

EXHIBIT "B"

Southwestern Bell Mobile Systems Antennas

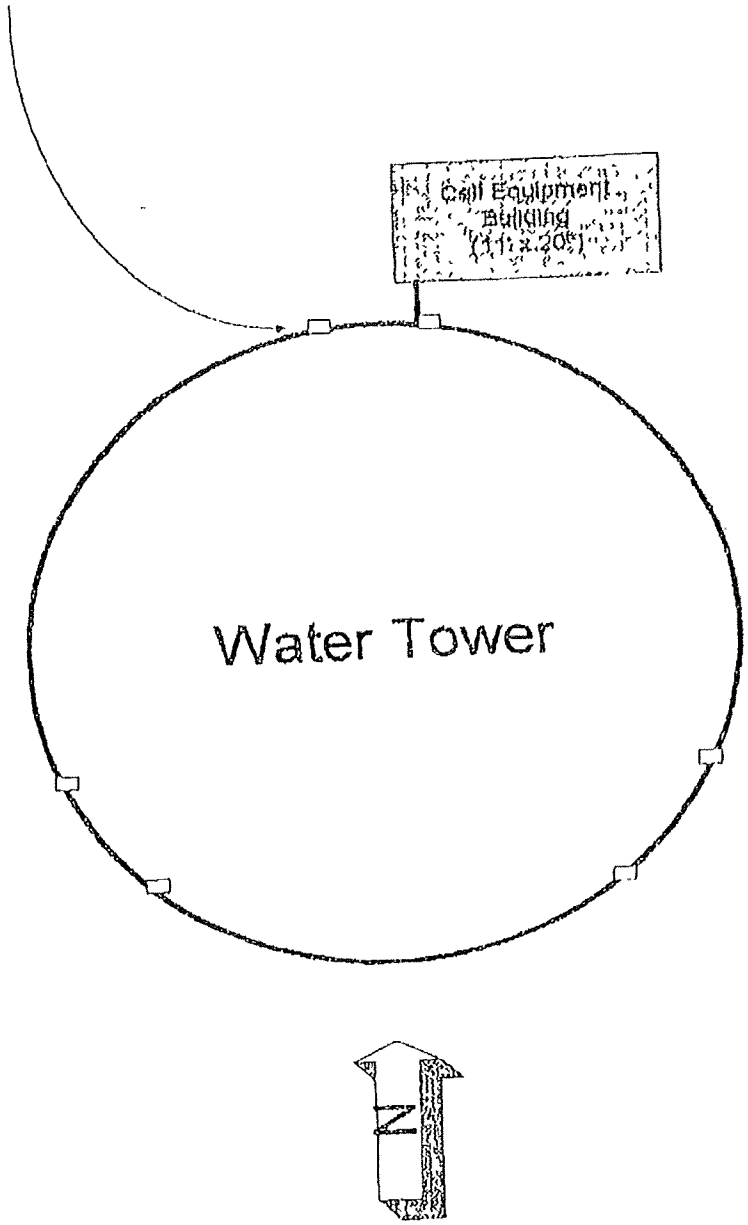

Antennas will be mounted at 120 degree intervals around the toweR with 6' separation between antenna pairs,

Attachment: PC-2022-03 Packet (5952 : AT&T - Special Permit Application)

Cell Site No: 10000548 / 4965 NICHOLS HILL_WS-41281.1
FA No: 10000548
Site Address: 1009 N.W. 75th Street, Oklahoma City, OK 73116

EXHIBIT C

DESCRIPTION OF ANTENNAE FACILITIES

Attachment: PC-2022-03 Packet (5952 : AT&T - Special Permit Application)

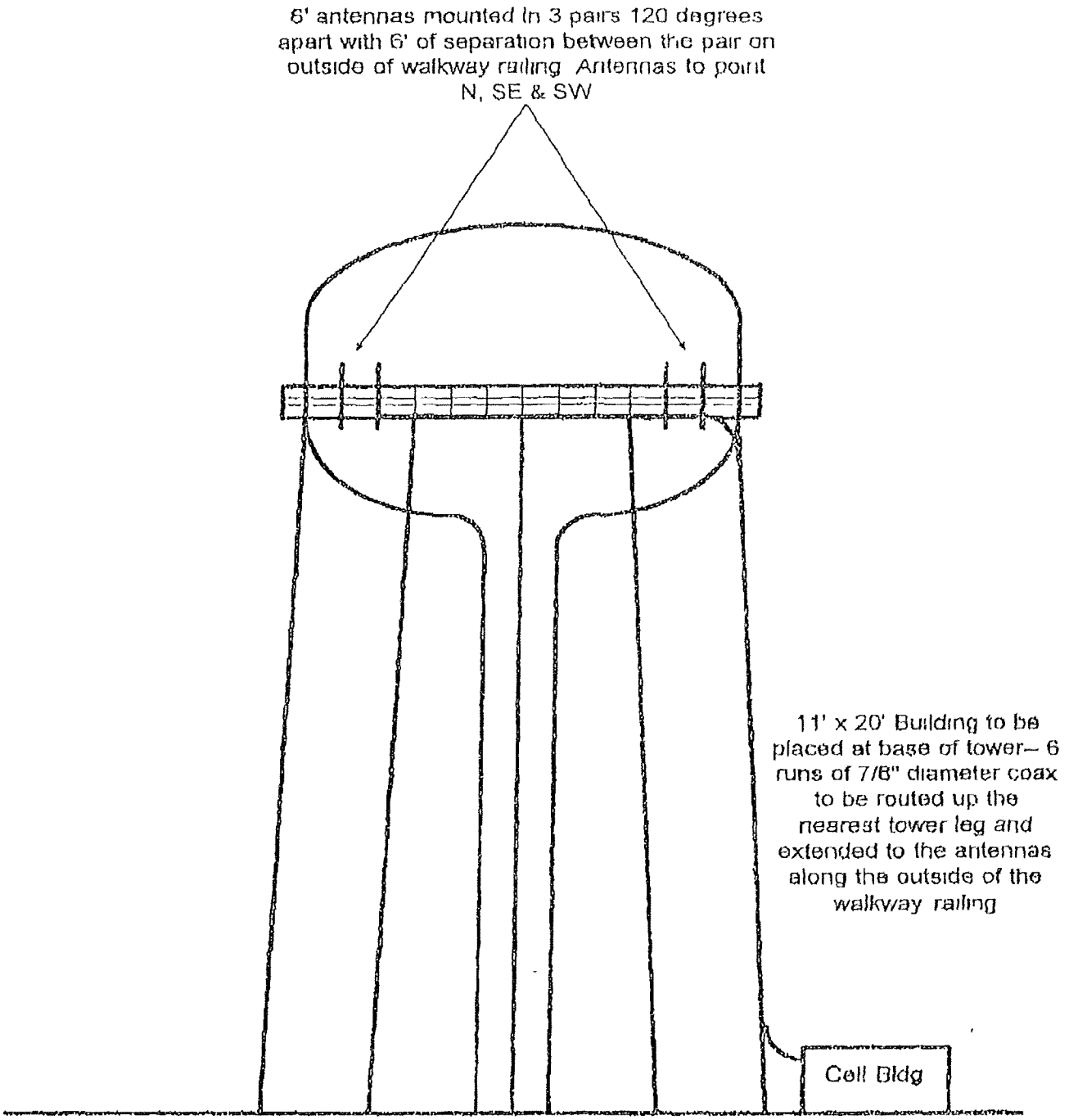

Attachment: PC-2022-03 Packet (5952 : AT&T - Special Permit Application)

EXHIBIT "A"

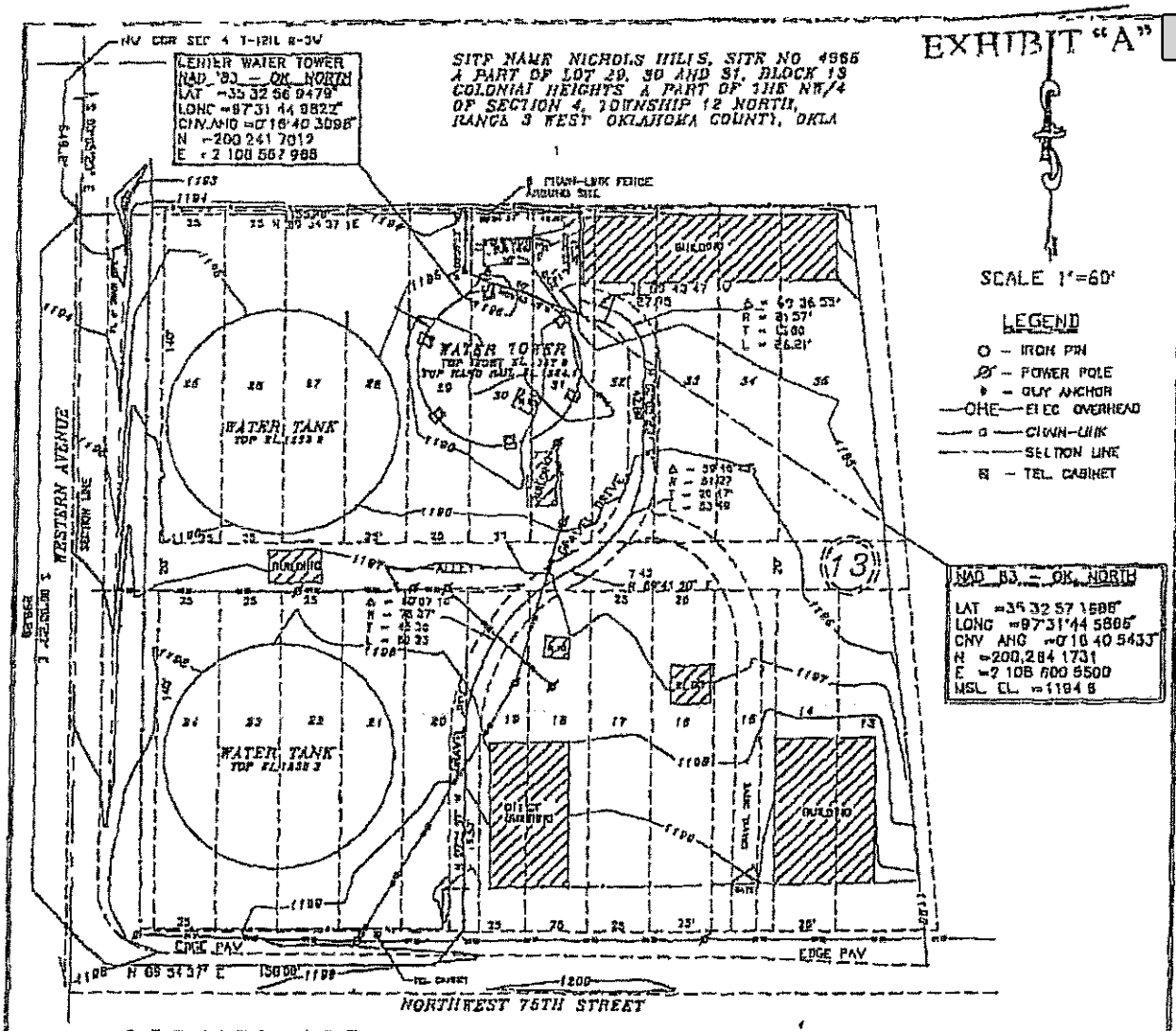

CERTIFICATE

I, Wayne G Guinn, registered land surveyor in the State of Oklahoma, hereby certify that the accompanying plat is a true and correct representation of the survey made of the following described property located in Block 13, COLONIAL HEIGHTS, being a part of the NW/4 of Section 4, Township 12 North, Range 3 West, Oklahoma County,

I, further certify that the referenced point is within the 2-"C" tolerance

SUBJECT TRACT

A tract of land located in Lot 29, 30 and 31, Block 13, COLONIAL HEIGHTS, a part of the NW/4 of Section 4, Township 12 North, Range 3 West, Oklahoma County, Oklahoma, more particularly described as follows Beginning at a point 1 72 feet South and 2 72 feet West of the Northeast corner of Lot 29 of said Block 13, thence East and parallel with the North line of said Lot 29, a distance of 48 87 feet, thence South a distance of 42 39 feet, thence N 89 43'47" W a distance of 50 0 feet, thence North a distance of 25 0 feet to the point of beginning

INGRESS-EGRESS

A 12 foot wide roadway located in Block 13, COLONIAL HEIGHTS, a part of the NW/4 of Section 4, Township 12 North, Range 3 West, Oklahoma County, Oklahoma, with the center-line described as follows Beginning at the Southeast corner of Lot 20, of said Block 13, thence N 00°25'57" W a distance of 78 53 feet, thence in a Northeasterly direction along a curve to the right having a radius of 78 37 feet, a distance of 82 23' feet, thence N 59 41'20"E a distance of 7 42 feet, thence in a Northeasterly direction along a curve to the left having a radius of 51 27 feet, a distance of 53 49 feet, thence N 00 05'23' W a distance of 42 89 feet, thence in a Northwesterly direction along a curve to the left having a radius of 21 57 feet, a distance of 26 21 feet to the end of said 12 foot wide roadway

REGISTERED LAND SURVEYOR
WAYNE G GUINN
LS 789
OKLAHOMA

Wayne G Guinn LS 789

CENTRAL LAND SURVEYING	For CIMARRON LAND SERVICES, INC.	
P O Box 2117 Ada, Okla 74820 Phone (405)436-3455	Drawn by W Guinn	Checked by K Guinn
	Date 11-00-94	Book No 205
	Sheet 1 of 1	

Attachment: PC-2022-03 Packet (5952 : AT&T - Special Permit Application)

DocuSign Envelope ID: 4A3B1FAB-27F3-4715-920D-27A5597DDB38

AT&T Mobility

SITE NAME:	NICHOLS HILLS
SITE ID:	OK1085
FA LOCATION CODE:	10000548
PROJECT:	LTE-5G / ANT MOD
TOWER NUMBER:	N/A
PACE ID:	**MROAR038463** / MROAR038465 / MROAR040203 / MROAR038462
ADDRESS:	1009 NORTHWEST 75TH, NICHOLS HILLS, OK 73116
TOWER INFO:	128'-0" WATER TANK
SITE COORDINATES:	35.549281° / -97.529208°

THE DESIGN SHOWN ON THESE DRAWINGS IS BASED ON INFORMATION GATHERED FROM AT&T RFDS AT&T RFDS V2021_1.00 DATED 10/26/2021

PREPARED BY:
NEXIUS SOLUTIONS, INC.
2595 NORTH DALLAS PARKWAY
SUITE 300
FRISCO, TX 75034

CLIENT:
AT&T Mobility
1700 CANTRELL ROAD,
LITTLE ROCK, AR 72223

SITE INFORMATION

SITE NAME:	NICHOLS HILLS
SITE ID:	OK1085
FA LOCATION CODE:	10000548
ADDRESS:	1009 NORTHWEST 75TH
CITY, STATE ZIP:	NICHOLS HILLS, OK 73116
COUNTY:	OKLAHOMA
LATITUDE:	35.549281°
LONGITUDE:	-97.529208°
GROUND ELEVATION:	1197'± AMSL
STRUCTURE TYPE:	WATER TANK
STRUCTURE HEIGHT:	128'-0" A.G.L (ABOVE GROUND LEVEL)
RAD CENTER:	129'-0" A.G.L
APPLICANT:	AT&T MOBILITY 17000 CANTRELL ROAD, STEVEN B. LAMBERT, sl5279@att.com LITTLE ROCK, AR 72223
SITE ACQUISITION:	HAZEL MAURO – SITE ACQUISITION MANAGER 155 INTERNATIONAL BLVD GLENDALE HEIGHTS, IL 60139 hazel.mauro@nexius.com
A&E SERVICES:	NEXIUS SOLUTIONS, INC. 2595 NORTH DALLAS PKWY, SUITE 300 FRISCO, TX 75034 jack.phipps@nexius.com
STRUCTURE OWNER:	NICHOLS HILLS

811 Know what's below. Call before you dig.

TO OBTAIN LOCATION OF PARTICIPANTS UNDERGROUND FACILITIES BEFORE YOU DIG IN OKLAHOMA, CONTACT CALL OKIE
TOLL FREE: 1-800-522-6543 OR
www.callokie.com

OKLAHOMA STATUTE REQUIRES MIN OF 2 WORKING DAYS NOTICE BEFORE YOU EXCAVATE

VICINITY MAP

APPLICABLE CODES

ALL WORK SHALL BE PERFORMED AND MATERIALS INSTALLED IN ACCORDANCE WITH CURRENT EDITIONS OF THE FOLLOWING APPLICABLE CODES AS ADOPTED BY THE LOCAL GOVERNING AUTHORITIES.

- 2018 INTERNATIONAL BUILDING CODE
- 2020 NATIONAL ELECTRIC CODE

THESE DRAWINGS ARE DESIGNED TO THE LATEST CODES. THEY ALSO MEET THE ADOPTED CODE REQUIREMENTS OF THE JURISDICTION.

SHEET INDEX

SHEET #	SHEET DESCRIPTION
T-1	TITLE SHEET
C-1	SITE PHOTOS
C-2	DETAILED SITE PLAN
C-3	SHELTER SITE PLAN
C-4	TOWER ELEVATIONS
RF-1	RF SCHEDULE
RF-2	ANTENNA SECTOR PLANS
EQ-1	EQUIPMENT DETAILS
GN-1	GENERAL NOTES

SCOPE OF WORK

REFER TO THE MOUNT ANALYSIS DATED 02/24/22 FOR MOUNT MODIFICATION.
PE: BRAD ROBERT MILANOWSKI
MA VENDOR: B+T GRP

ALPHA, BETA, GAMMA:

- ***SAQ TO MAKE SURE 3FT HORIZONTAL SEPARATION BETWEEN CBAND AND LTE ANTENNAS AND A MINIMUM OF 12IN VERTICAL SEPARATION BETWEEN CBAND STACKED ANTENNAS IS MAINTAINED***
- REMOVE 1X EXISTING RRUS-12 B5 FROM POS2.
- REMOVE 1X EXISTING SBNHH-1D65C ANTENNA FROM POS4.
- REMOVE 1X EXISTING RRUS-11 B12 FROM POS4.
- REMOUNT 1X EXISTING RRUS-32 B30 (LTE 2300) ON POS4 MOUNTED ON A NEW DUAL BRACKET. CONNECT PORTS TO ANTENNA ON POS4.
- ADD 1X NEW AIR6449 N77D AND 1X NEW AIR6419 N77G ON POS3 MOUNTED ABOVE EACH OTHER STACKED.
- ADD 1X NEW TPA65R-BU8D ANTENNA ON POS4 MOUNTED ON AN EXISTING PIPE.
- ADD 1X NEW RRUS-4449 B5/B12 (LTE 700, LTE 850) MOUNTED BACK TO BACK WITH RRUS-32 B30.

POWER:

- ADD 1X NEW DC2 PER SECTOR. ADD 1X NEW FC12, ADD 2X NEW 6AWG6 DC TRUNKS.
- USE EXISTING FIBER TRUNKS.
- EXISTING NETSURE 710 +24V DC POWER PLANT, RECOMMENDED TO SWAP.

ANY DEVIATION THAT DIFFERS SUBSTANTIALLY FROM WHAT IS SHOWN ON THE CONSTRUCTION DRAWINGS MUST BE APPROVED BY THE ENGINEER OF RECORD. NO CHANGES THAT ALTER THE CHARACTER OF THE WORK CAN BE MADE DURING CONSTRUCTION WITHOUT ISSUING A CHANGE ORDER.

LICENSED PROFESSIONAL ENGINEER JACK T. PHIPPS 11626 OKLAHOMA

PE RENEWAL 10/31/22 | NEXIUS SOLUTIONS, INC. OKLAHOMA FIRM NUMBER 7540 RENEWAL DATE 06/30/23 | DATE SIGNED: 03/17/22

PROJECT STATUS:
FOR CONSTRUCTION
NEXIUS SOLUTIONS, INC. IS REGISTERED IN OK

PRELIMINARY: NOT FOR CONSTRUCTIO

SUBMITTALS

REV	DATE	DESCRIPTION	BY
A	01/20/22	CD FOR REVIEW	JF
0	03/17/22	FINAL CD	JF

SITE INFORMATION:
SITE NAME: NICHOLS HILLS
SITE NUMBER: OK1085
SITE ADDRESS: 1009 NORTHWEST 75TH NICHOLS HILLS, OK 73116
SITE COORDINATES: 35.549281° / -97.529208°

SHEET TITLE: TITLE SHEET

SHEET NUMBER: T-1

THIS DOCUMENT IS THE DESIGN PROPERTY AND COPYRIGHT OF NEXIUS AND FOR THE EXCLUSIVE USE BY THE TITLE CLIENT. DUPLICATION OR USE WITHOUT THE EXPRESS WRITTEN CONSENT OF THE CREATOR IS STRICTLY PROHIBITED. DRAWING SCALES ARE INTENDED FOR 22"x34" SIZE PRINTED MEDIA ONLY. 11"x17" IS DEEMED HALF SCALE, AND ALL OTHER PRINTED SIZES ARE DEEMED "NOT TO SCALE".

Attachment: PC-2022-03 Packet (5952 : AT&T - Special Permit Application)

DocuSign Envelope ID: 4A3B1FAB-27F3-4715-920D-27A5597DDB38

1 OVERALL SITE PLAN
SCALE: 1:100

11"x17" SCALE: 1" = 200'-0"
22"x34" SCALE: 1" = 100'-0"

200' 0 200' 400' 800'
100' 0 100' 200' 400'

NOTE:

THIS PLAN WAS CREATED BASED ON INFORMATION GATHERED FROM PREVIOUS DRAWINGS, AERIAL PHOTOGRAPHY, GIS DATA, AND/OR ASSESSORS MAPS PROVIDED BY LOCAL SOURCES. THIS PLAN IS IN NO WAY INTENDED TO BE USED AS A BOUNDARY SURVEY.

2 STRUCTURE PHOTO
SCALE: N.T.S

PREPARED BY:
nexius
NEXIUS SOLUTIONS, INC.
2595 NORTH DALLAS PARKWAY
SUITE 300
FRISCO, TX 75034

CLIENT:
AT&T Mobility
1700 CANTRELL ROAD,
LITTLE ROCK, AR 72223

LICENSED PROFESSIONAL ENGINEER
JACK T. PHIPPS
11626
OKLAHOMA

PE RENEWAL 10/31/22 NEXIUS SOLUTIONS, INC. OKLAHOMA FIRM NUMBER 7540 RENEWAL DATE 06/30/23 DATE SIGNED: 03/17/22

PROJECT STATUS:
FOR CONSTRUCTION
NEXIUS SOLUTIONS, INC. IS REGISTERED IN OK

PRELIMINARY: NOT FOR CONSTRUCTIO

SUBMITTALS

REV	DATE	DESCRIPTION	BY
A	01/20/22	CD FOR REVIEW	JF
0	03/17/22	FINAL CD	JF

SITE INFORMATION:

SITE NAME:
NICHOLS HILLS

SITE NUMBER:
OK1085

SITE ADDRESS:
1009 NORTHWEST 75TH
NICHOLS HILLS, OK 73116

SITE COORDINATES:
35.549281° / -97.529208°

SHEET TITLE:
OVERALL SITE PLAN

SHEET NUMBER:
C-1

THIS DOCUMENT IS THE DESIGN PROPERTY AND COPYRIGHT OF NEXIUS AND FOR THE EXCLUSIVE USE BY THE TITLE CLIENT. DUPLICATION OR USE WITHOUT THE EXPRESS WRITTEN CONSENT OF THE CREATOR IS STRICTLY PROHIBITED. DRAWING SCALES ARE INTENDED FOR 22"x34" SIZE PRINTED MEDIA ONLY. 11"x17" IS DEEMED HALF SCALE, AND ALL OTHER PRINTED SIZES ARE DEEMED "NOT TO SCALE".

Attachment: PC-2022-03 Packet (5952 : AT&T - Special Permit Application)

DocuSign Envelope ID: 4A3B1FAB-27F3-4715-920D-27A5597DDB38

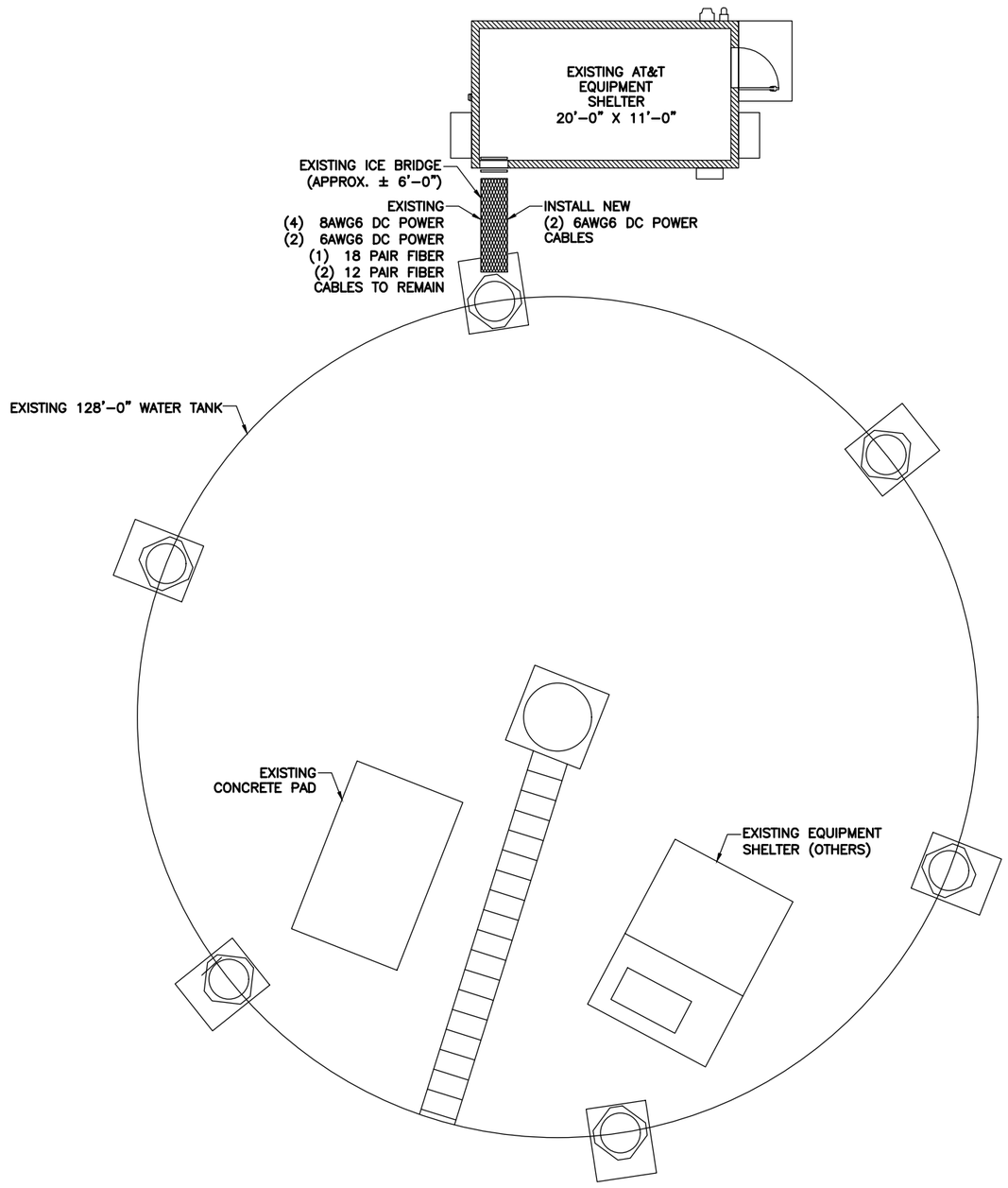

1 DETAILED SITE PLAN
SCALE: 3/16" = 1'–0"

N

11"x17" SCALE: 3/32" = 1'–0" 0 5'–4" 10'–8" 21'–4"
22"x34" SCALE: 3/16" = 1'–0" 0 2'–8" 5'–4" 10'–8"

PREPARED BY:

NEXIUS SOLUTIONS, INC.
2595 NORTH DALLAS PARKWAY
SUITE 300
FRISCO, TX 75034

CLIENT:

AT&T Mobility
1700 CANTRELL ROAD,
LITTLE ROCK, AR 72223

LICENSED PROFESSIONAL ENGINEER
JACK T. PHIPPS
11626
OKLAHOMA

PE RENEWAL 10/31/22 NEXIUS SOLUTIONS, INC. OKLAHOMA FIRM NUMBER 7540 RENEWAL DATE 06/30/23 DATE SIGNED: 03/17/22

PROJECT STATUS:

FOR CONSTRUCTION

NEXIUS SOLUTIONS, INC. IS REGISTERED IN OK

PRELIMINARY: NOT FOR CONSTRUCTIO

SUBMITTALS

REV	DATE	DESCRIPTION	BY
A	01/20/22	CD FOR REVIEW	JF
0	03/17/22	FINAL CD	JF

SITE INFORMATION:

SITE NAME:
NICHOLS HILLS

SITE NUMBER:
OK1085

SITE ADDRESS:
1009 NORTHWEST 75TH
NICHOLS HILLS, OK 73116

SITE COORDINATES:
35.549281° / –97.529208°

SHEET TITLE:

DETAILED SITE PLAN

SHEET NUMBER:

C-2

THIS DOCUMENT IS THE DESIGN PROPERTY AND COPYRIGHT OF NEXIUS AND FOR THE EXCLUSIVE USE BY THE TITLE CLIENT. DUPLICATION OR USE WITHOUT THE EXPRESS WRITTEN CONSENT OF THE CREATOR IS STRICTLY PROHIBITED. DRAWING SCALES ARE INTENDED FOR 22"x34" SIZE PRINTED MEDIA ONLY. 11"x17" IS DEEMED HALF SCALE, AND ALL OTHER PRINTED SIZES ARE DEEMED "NOT TO SCALE".

Attachment: PC-2022-03 Packet (5952 : AT&T - Special Permit Application)

DocuSign Envelope ID: 4A3B1FAB-27F3-4715-920D-27A5597DDB38

RRH BREAKER SCHEDULE					
RRH MANUFACTURER	RRH MODEL	BREAKER SIZE	DC POWER CONSUMPTION	BREAKER AT&T ITEM# VERTIV/ EMERSON WHITE HANDLE	BREAKER QUANTITY
ERICSSON	4449 B5/B12	25 AMP	1,440 W	NEQ.00710	6
ERICSSON	AIR 6449 N77	50 AMP	1,280 W	NEQ.00710	3
ERICSSON	AIR 6419 N77	25 AMP	1,280 W	NEQ.00710	3

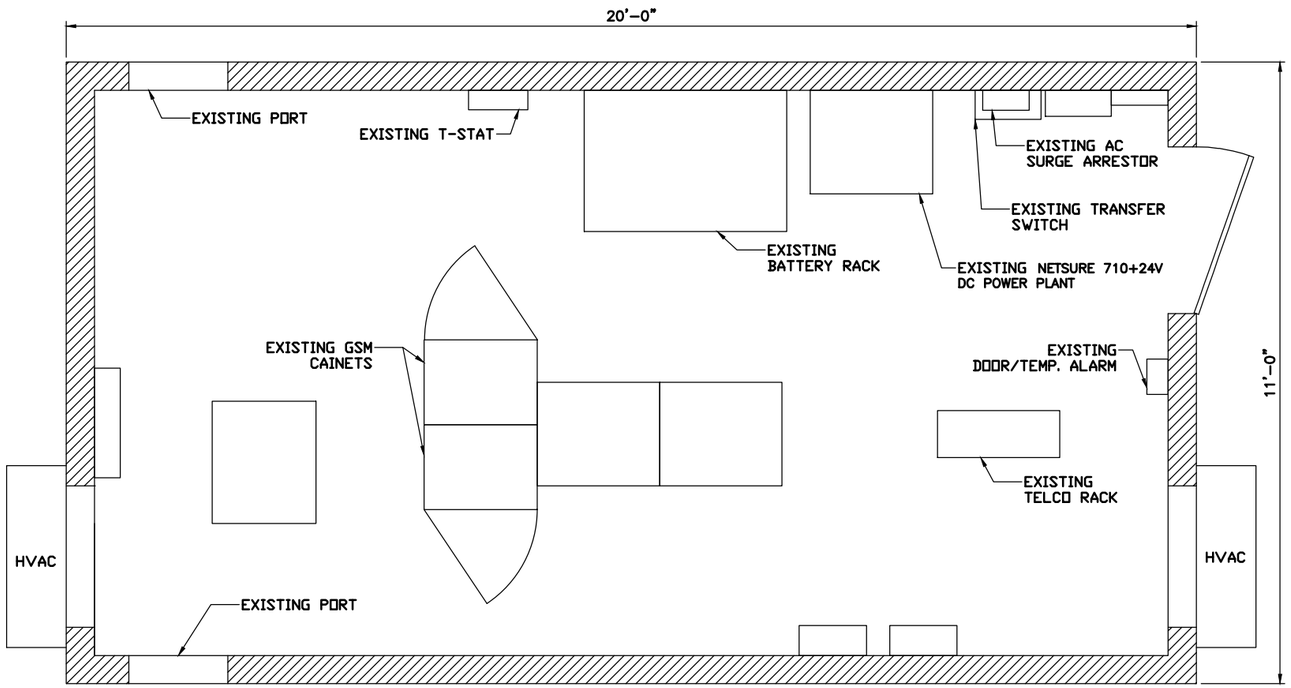

1 SHELTER SITE PLAN
SCALE: 3/4" = 1'-0"

N

11"x17" SCALE: 3/8" = 1'-0"
22"x34" SCALE: 3/4" = 1'-0"
0 1'-4" 2'-8" 5'-4"
0 8" 1'-4" 2'-8"

PREPARED BY:

NEXIUS SOLUTIONS, INC.
2595 NORTH DALLAS PARKWAY
SUITE 300
FRISCO, TX 75034

CLIENT:

AT&T Mobility
1700 CANTRELL ROAD,
LITTLE ROCK, AR 72223

LICENSED PROFESSIONAL ENGINEER
JACK T. PHIPPS
11626
OKLAHOMA

PE RENEWAL 10/31/22 NEXIUS SOLUTIONS, INC. OKLAHOMA FIRM NUMBER 7540 RENEWAL DATE 06/30/23 DATE SIGNED: 03/17/22

PROJECT STATUS:

FOR CONSTRUCTION

NEXIUS SOLUTIONS, INC. IS REGISTERED IN OK

PRELIMINARY: NOT FOR CONSTRUCTIO

SUBMITTALS

REV	DATE	DESCRIPTION	BY
A	01/20/22	CD FOR REVIEW	JF
0	03/17/22	FINAL CD	JF

SITE INFORMATION:

SITE NAME:
NICHOLS HILLS

SITE NUMBER:
OK1085

SITE ADDRESS:
1009 NORTHWEST 75TH
NICHOLS HILLS, OK 73116

SITE COORDINATES:
35.549281° / -97.529208°

SHEET TITLE:
SHELTER SITE PLAN

SHEET NUMBER:
C-3

THIS DOCUMENT IS THE DESIGN PROPERTY AND COPYRIGHT OF NEXIUS AND FOR THE EXCLUSIVE USE BY THE TITLE CLIENT. DUPLICATION OR USE WITHOUT THE EXPRESS WRITTEN CONSENT OF THE CREATOR IS STRICTLY PROHIBITED. DRAWING SCALES ARE INTENDED FOR 22"x34" SIZE PRINTED MEDIA ONLY. 11"x17" IS DEEMED HALF SCALE, AND ALL OTHER PRINTED SIZES ARE DEEMED "NOT TO SCALE".

Attachment: PC-2022-03 Packet (5952 : AT&T - Special Permit Application)

DocuSign Envelope ID: 4A3B1FAB-27F3-4715-920D-27A5597DDB38

NOTE:
IT IS THE RESPONSIBILITY OF THE CONTRACTOR TO VERIFY, PRIOR TO THE ONSET OF CONSTRUCTION, THAT THE SUPPORTING STRUCTURE(S) AND MOUNTING SYSTEM(S) HAVE BEEN DEEMED STRUCTURALLY ADEQUATE BY A LICENSED PROFESSIONAL ENGINEER TO SUPPORT THE EXISTING AND PROPOSED EQUIPMENT AND ASSOCIATED CONSTRUCTION LOADS, INCLUDING BUT NOT LIMITED TO THOSE DEPICTED, HEREIN. THE CONTRACTOR SHALL ASSUME THE FULL–LIABILITY AND RISK ASSOCIATED WITH THE INSTALLATION OF THE PROPOSED EQUIPMENT AND/OR APPURTENANCES IF PERFORMED WITHOUT SAID PASSING STRUCTURAL ANALYSIS OR EVALUATION. IF THE RESULT OF THE ANALYSIS REQUIRES THE STRUCTURE BE STRENGTHENED OR MODIFIED; SUCH MODIFICATIONS SHALL BE PROPERLY INSTALLED AND COMPLETED PRIOR TO THE ONSET OF CONSTRUCTION.

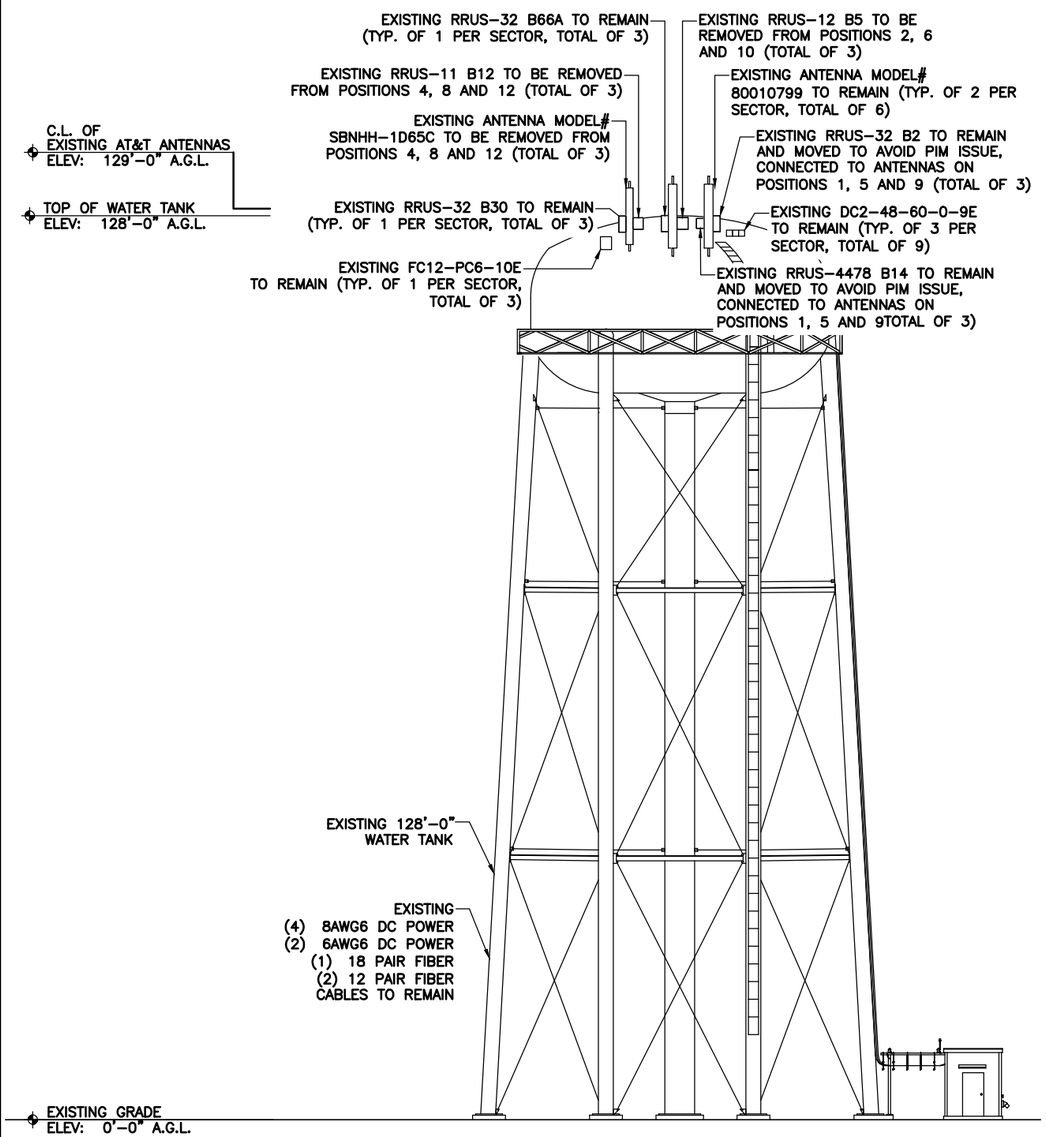

1 TOWER ELEVATION (EXISTING)
SCALE: 3/32" = 1'–0"

11"x17" SCALE: 1/32" = 1'–0" 0 16' 32' 64'
22"x34" SCALE: 1/16" = 1'–0" 0 8' 16' 32'

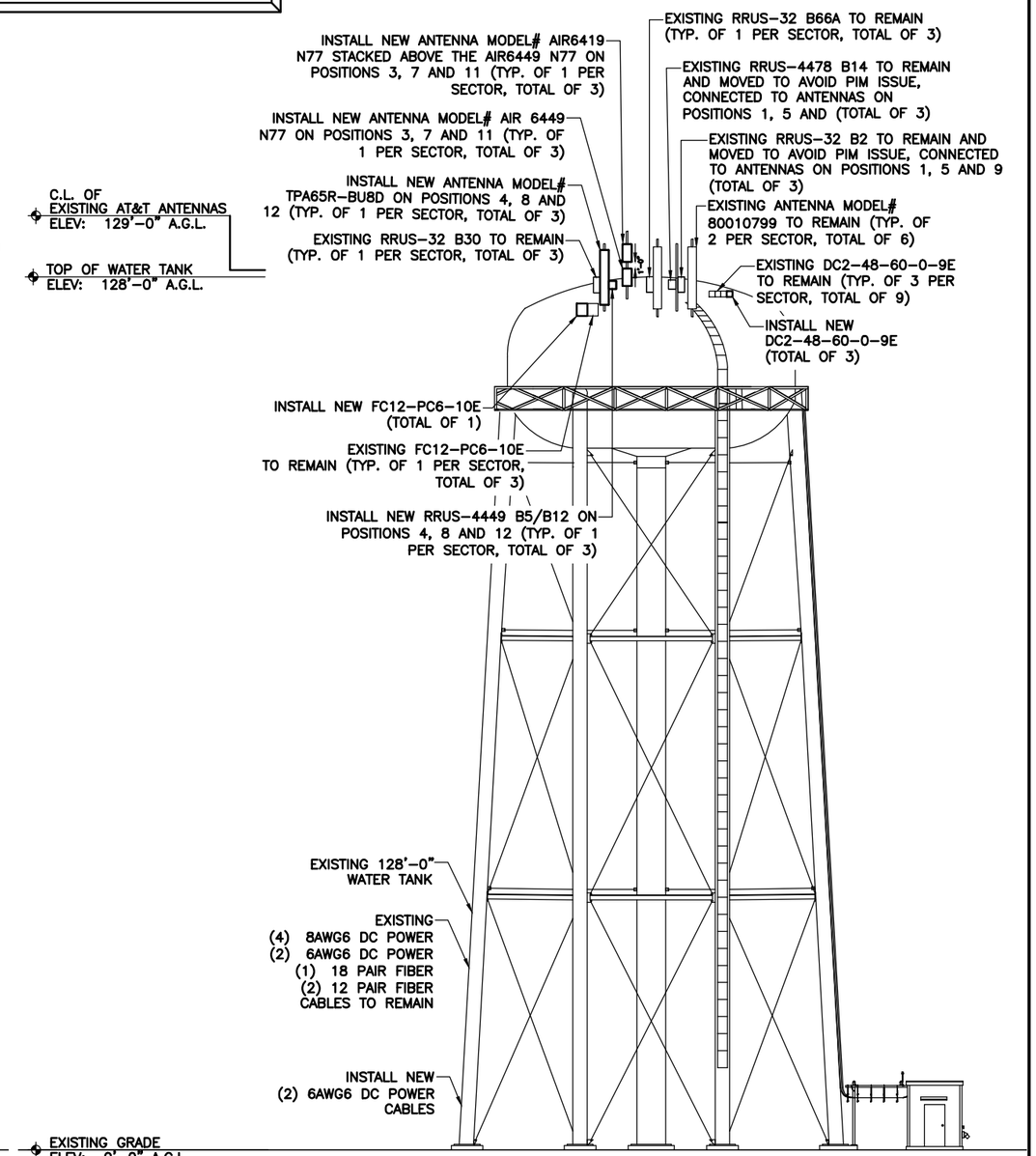

2 TOWER ELEVATION (PROPOSED)
SCALE: 3/32" = 1'–0"

11"x17" SCALE: 1/32" = 1'–0" 0 16' 32' 64'
22"x34" SCALE: 1/16" = 1'–0" 0 8' 16' 32'

PREPARED BY:
NEXIUS SOLUTIONS, INC.
2595 NORTH DALLAS PARKWAY
SUITE 300
FRISCO, TX 75034

CLIENT:
AT&T Mobility
1700 CANTRELL ROAD,
LITTLE ROCK, AR 72223

LICENSED PROFESSIONAL ENGINEER JACK T. PHIPPS 11626 OKLAHOMA

PE RENEWAL 10/31/22 — NEXIUS SOLUTIONS, INC. OKLAHOMA FIRM NUMBER 7540 RENEWAL DATE 06/30/23 — DATE SIGNED: 03/17/22

PROJECT STATUS:
FOR CONSTRUCTION
NEXIUS SOLUTIONS, INC. IS REGISTERED IN OK

PRELIMINARY: NOT FOR CONSTRUCTIO

SUBMITTALS

REV	DATE	DESCRIPTION	BY
A	01/20/22	CD FOR REVIEW	JF
0	03/17/22	FINAL CD	JF

SITE INFORMATION:
SITE NAME: NICHOLS HILLS
SITE NUMBER: OK1085
SITE ADDRESS: 1009 NORTHWEST 75TH NICHOLS HILLS, OK 73116
SITE COORDINATES: 35.549281° / –97.529208°

SHEET TITLE: TOWER ELEVATIONS

SHEET NUMBER: C-4

THIS DOCUMENT IS THE DESIGN PROPERTY AND COPYRIGHT OF NEXIUS AND FOR THE EXCLUSIVE USE BY THE TITLE CLIENT. DUPLICATION OR USE WITHOUT THE EXPRESS WRITTEN CONSENT OF THE CREATOR IS STRICTLY PROHIBITED. DRAWING SCALES ARE INTENDED FOR 22"x34" SIZE PRINTED MEDIA ONLY. 11"x17" IS DEEMED HALF SCALE, AND ALL OTHER PRINTED SIZES ARE DEEMED "NOT TO SCALE".

Attachment: PC-2022-03 Packet (5952 : AT&T - Special Permit Application)

DocuSign Envelope ID: 4A3B1FAB-27F3-4715-920D-27A5597DDB38

THE DESIGN SHOWN ON THESE DRAWINGS IS BASED ON INFORMATION GATHERED FROM AT&T RFDS AT&T RFDS V2021_1.00 DATED 10/26/2021

EXISTING

SECTOR	ANTENNA TECHNOLOGY	ANTENNA POSITION	MODEL	RAD CENTER (AGL)	AZIMUTH	COAX CABLES	OTHER CABLES	TMA'S	TOWER DIPLEXERS	RRU'S	OTHER DEVICES
ALPHA	LTE-700 / 1900 / UMTS-850	#1	(1) 80010799	129'-0"	5°	N/A	(4) 8AWG6 DC POWER (2) 6AWG6 DC POWER (1) 18 PAIR FIBER (2) 12 PAIR FIBER	N/A	N/A	(1) 4478 B14 (1) RRUS-32 B2	(9) DC2-48-60-0-9E (3) FC12-PC6-10E
	LTE-700 / AWS	#2	(1) 80010799					N/A	N/A	(1) RRUS-12 B5 (1) RRUS-32 B66A	
	N/A	#3	N/A					N/A	N/A	N/A	
	LTE-700 / WCS	#4	(1) SBNHH-1D65C					N/A	N/A	(1) RRUS-11 B12 (1) RRUS-32 B30	
BETA	LTE-700 / 1900 / UMTS-850	#5	(1) 80010799	129'-0"	125°			N/A	N/A	(1) 4478 B14 (1) RRUS-32 B2	
	LTE-700 / AWS	#6	(1) 80010799					N/A	N/A	(1) RRUS-12 B5 (1) RRUS-32 B66A	
	N/A	#7	N/A					N/A	N/A	N/A	
	LTE-700 / WCS	#8	(1) SBNHH-1D65C					N/A	N/A	(1) RRUS-11 B12 (1) RRUS-32 B30	
GAMMA	LTE-700 / 1900 / UMTS-850	#9	(1) 80010799	129'-0"	255°			N/A	N/A	(1) 4478 B14 (1) RRUS-32 B2	
	LTE-700 / AWS	#10	(1) 80010799					N/A	N/A	(1) RRUS-12 B5 (1) RRUS-32 B66A	
	N/A	#11	N/A					N/A	N/A	N/A	
	LTE-700 / WCS	#12	(1) SBNHH-1D65C					N/A	N/A	(1) RRUS-11 B12 (1) RRUS-32 B30	

PROPOSED

SECTOR	ANTENNA TECHNOLOGY	ANTENNA POSITION	MODEL	RAD CENTER (AGL)	AZIMUTH	COAX CABLES	OTHER CABLES	TMA'S	TOWER DIPLEXERS	RRU'S	OTHER DEVICES
ALPHA	LTE-700 / 1900	#1	(1) 80010799	129'-0"	5°	N/A	(4) 8AWG6 DC POWER (4) 6AWG6 DC POWER (1) 18 PAIR FIBER (2) 12 PAIR FIBER	N/A	N/A	(1) 4478 B14 (1) RRUS-32 B2	(12) DC2-48-60-0-9E (4) FC12-PC6-10E
	LTE-700 / AWS	#2	(1) 80010799					N/A	N/A	(1) RRUS-32 B66A	
	LTE-5G	#3	(1) AIR6449 N77D (1) AIR6419 N77G					N/A	N/A	N/A	
	LTE-700 / 850 / WCS	#4	(1) TPA65R-BU8D					N/A	N/A	(1) 4449 B5/B12 (1) RRUS-32 B30	
BETA	LTE-700 / 1900	#5	(1) 80010799	129'-0"	125°			N/A	N/A	(1) 4478 B14 (1) RRUS-32 B2	
	LTE-700 / AWS	#6	(1) 80010799					N/A	N/A	(1) RRUS-32 B66A	
	LTE-5G	#7	(1) AIR6449 N77D (1) AIR6419 N77G					N/A	N/A	N/A	
	LTE-700 / 850 / WCS	#8	(1) TPA65R-BU8D					N/A	N/A	(1) 4449 B5/B12 (1) RRUS-32 B30	
GAMMA	LTE-700 / 1900	#9	(1) 80010799	129'-0"	255°			N/A	N/A	(1) 4478 B14 (1) RRUS-32 B2	
	LTE-700 / AWS	#10	(1) 80010799					N/A	N/A	(1) RRUS-32 B66A	
	LTE-5G	#11	(1) AIR6449 N77D (1) AIR6419 N77G					N/A	N/A	N/A	
	LTE-700 / 850 / WCS	#12	(1) TPA65R-BU8D					N/A	N/A	(1) 4449 B5/B12 (1) RRUS-32 B30	

PREPARED BY:
nexius
NEXIUS SOLUTIONS, INC.
2595 NORTH DALLAS PARKWAY
SUITE 300
FRISCO, TX 75034

CLIENT:
AT&T Mobility
1700 CANTRELL ROAD,
LITTLE ROCK, AR 72223

LICENSED PROFESSIONAL ENGINEER
JACK T. PHIPPS
11626
OKLAHOMA

PE RENEWAL 10/31/22 — NEXIUS SOLUTIONS, INC. OKLAHOMA FIRM NUMBER 7540 RENEWAL DATE 06/30/23 — DATE SIGNED: 03/17/22

PROJECT STATUS:
FOR CONSTRUCTION
NEXIUS SOLUTIONS, INC. IS REGISTERED IN OK

PRELIMINARY: NOT FOR CONSTRUCTIO

SUBMITTALS

REV	DATE	DESCRIPTION	BY
A	01/20/22	CD FOR REVIEW	JF
0	03/17/22	FINAL CD	JF

SITE INFORMATION:

SITE NAME:
NICHOLS HILLS

SITE NUMBER:
OK1085

SITE ADDRESS:
1009 NORTHWEST 75TH
NICHOLS HILLS, OK 73116

SITE COORDINATES:
35.549281° / -97.529208°

SHEET TITLE:
RF SCHEDULE

SHEET NUMBER:
RF-1

Attachment: PC-2022-03 Packet (5952 : AT&T - Special Permit Application)

THIS DOCUMENT IS THE DESIGN PROPERTY AND COPYRIGHT OF NEXIUS AND FOR THE EXCLUSIVE USE BY THE TITLE CLIENT. DUPLICATION OR USE WITHOUT THE EXPRESS WRITTEN CONSENT OF THE CREATOR IS STRICTLY PROHIBITED. DRAWING SCALES ARE INTENDED FOR 22"x34" SIZE PRINTED MEDIA ONLY. 11"x17" IS DEEMED HALF SCALE, AND ALL OTHER PRINTED SIZES ARE DEEMED "NOT TO SCALE".

DocuSign Envelope ID: 4A3B1FAB-27F3-4715-920D-27A5597DDB38

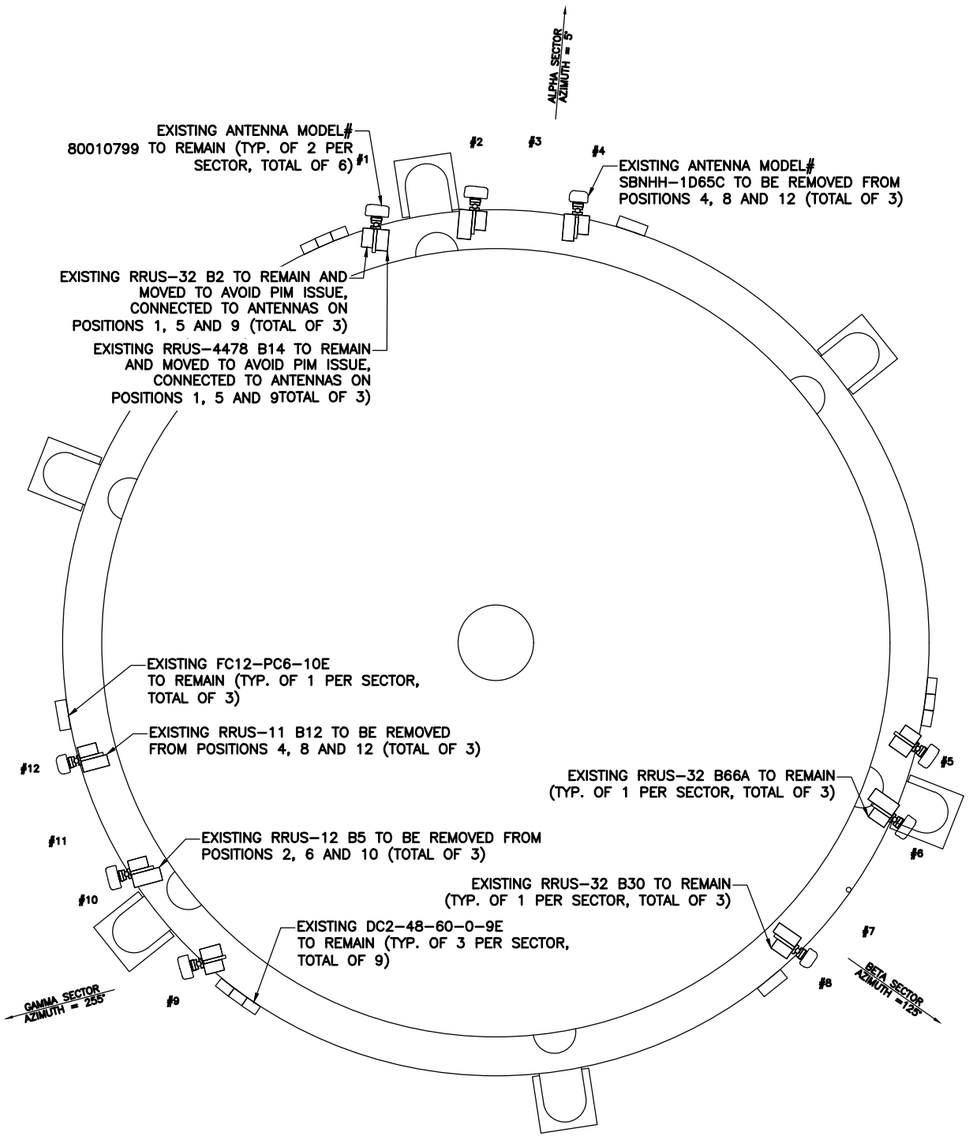

1 ANTENNA PLAN (EXISTING)
SCALE: 1/4" = 1'-0"

11"x17" SCALE: 1/8" = 1'-0" (0, 4', 8', 16')
22"x34" SCALE: 1/4" = 1'-0" (0, 2', 4', 8')

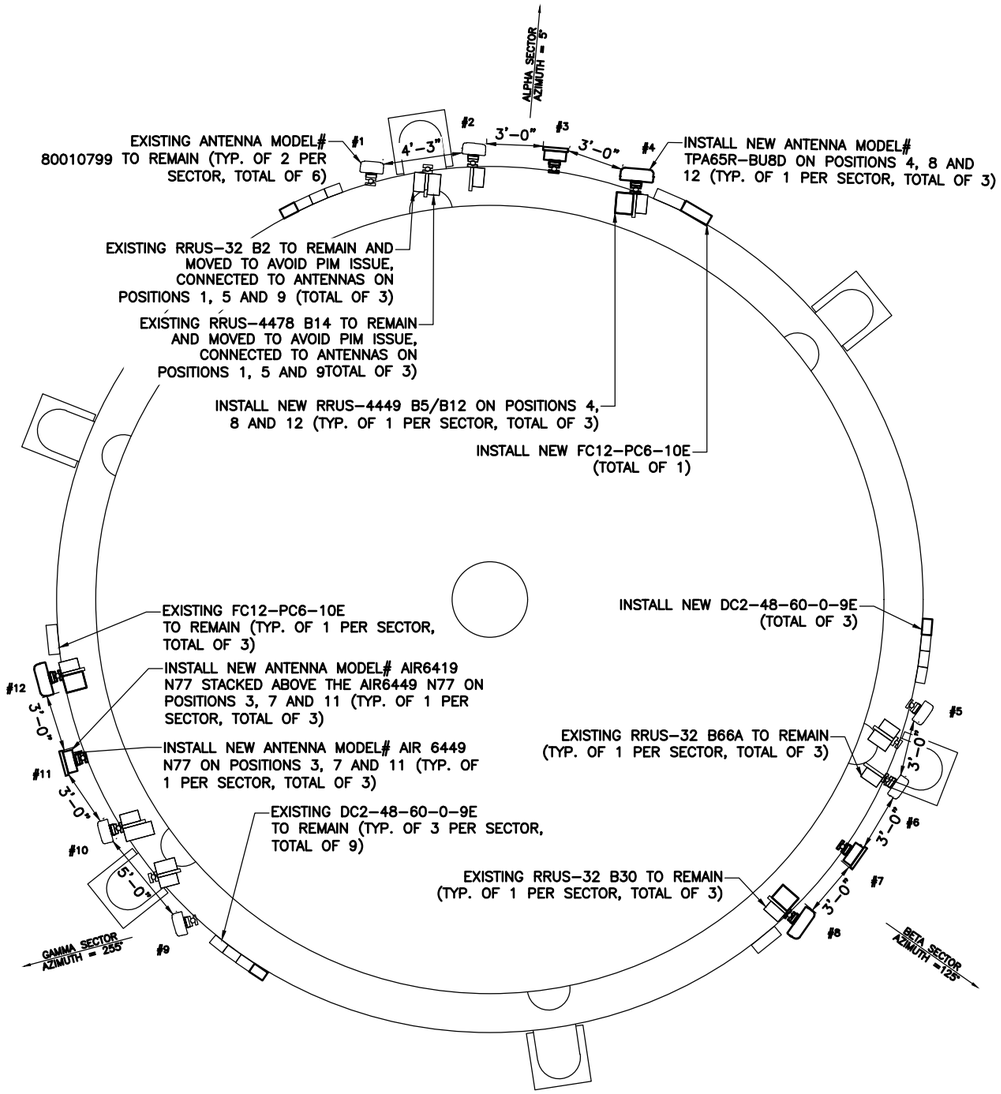

2 ANTENNA PLAN (PROPOSED)
SCALE: 1/4" = 1'-0"

11"x17" SCALE: 1/8" = 1'-0" (0, 4', 8', 16')
22"x34" SCALE: 1/4" = 1'-0" (0, 2', 4', 8')

N

PREPARED BY:

NEXIUS SOLUTIONS, INC.
2595 NORTH DALLAS PARKWAY
SUITE 300
FRISCO, TX 75034

CLIENT:

AT&T Mobility
1700 CANTRELL ROAD,
LITTLE ROCK, AR 72223

LICENSED PROFESSIONAL ENGINEER
JACK T. PHIPPS
11626
OKLAHOMA

PE RENEWAL 10/31/22 — NEXIUS SOLUTIONS, INC. OKLAHOMA FIRM NUMBER 7540 RENEWAL DATE 06/30/23 — DATE SIGNED: 03/17/22

PROJECT STATUS:

FOR CONSTRUCTION

NEXIUS SOLUTIONS, INC. IS REGISTERED IN OK

PRELIMINARY: NOT FOR CONSTRUCTIO

SUBMITTALS

REV	DATE	DESCRIPTION	BY
A	01/20/22	CD FOR REVIEW	JF
0	03/17/22	FINAL CD	JF

SITE INFORMATION:

SITE NAME:
NICHOLS HILLS

SITE NUMBER:
OK1085

SITE ADDRESS:
1009 NORTHWEST 75TH
NICHOLS HILLS, OK 73116

SITE COORDINATES:
35.549281° / -97.529208°

SHEET TITLE:
ANTENNA SECTOR PLAN

SHEET NUMBER:
RF-2

THIS DOCUMENT IS THE DESIGN PROPERTY AND COPYRIGHT OF NEXIUS AND FOR THE EXCLUSIVE USE BY THE TITLE CLIENT. DUPLICATION OR USE WITHOUT THE EXPRESS WRITTEN CONSENT OF THE CREATOR IS STRICTLY PROHIBITED. DRAWING SCALES ARE INTENDED FOR 22"x34" SIZE PRINTED MEDIA ONLY. 11"x17" IS DEEMED HALF SCALE, AND ALL OTHER PRINTED SIZES ARE DEEMED "NOT TO SCALE".

Attachment: PC-2022-03 Packet (5952 : AT&T - Special Permit Application)

DocuSign Envelope ID: 4A3B1FAB-27F3-4715-920D-27A5597DDB38

ERICSSON AIR6449	
DIMENSIONS (HxWxD)	32.24"x15.9"x8.1"
WEIGHT	73.6 lbs.

1 ERICSSON – AIR6449 N77D
N.T.S.

ERICSSON AIR6419	
DIMENSIONS (HxWxD)	32.24"x15.9"x8.1"
WEIGHT	73.6 lbs.

2 ERICSSON – AIR6419 N77G
N.T.S.

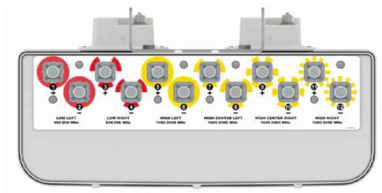

TPA45R–BU8D	
DIMENSIONS (HxWxD)	96.0"x20.7"x7.7"
WEIGHT	87.1 lbs.

3 TPA45R–BU8D DETAIL
N.T.S.

ERICSSON RRUS–4449 B5 / B12	
DIMENSIONS (HxWxD)	17.9"x13.2"x9.44"
WEIGHT	71 lbs.

4 ERICSSON – RRUS–4449 B5/B12
N.T.S.

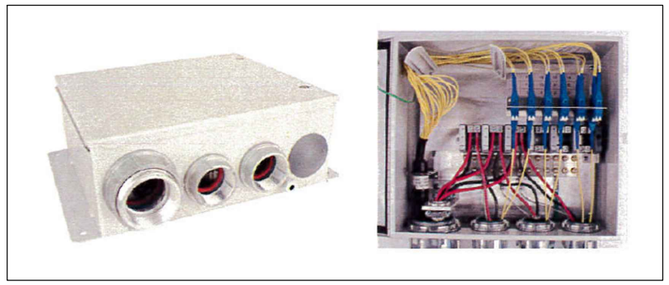

RAYCAP FC12–PC6–10E	
DIMENSIONS (HxWxD)	16.24"x15.5"x6.64"
WEIGHT	20.35 lbs.

5 RAYCAP FC12–PC6–10E DETAIL
N.T.S.

RAYCAP DC2–48–60–0–9E	
DIMENSIONS (HxWxD)	10.25"x10.25"x6.20"
WEIGHT	16 lbs.

6 RAYCAP DC2–48–60–0–9E DETAIL
N.T.S.

PREPARED BY:
NEXIUS SOLUTIONS, INC.
2595 NORTH DALLAS PARKWAY
SUITE 300
FRISCO, TX 75034

CLIENT:
AT&T Mobility
1700 CANTRELL ROAD,
LITTLE ROCK, AR 72223

LICENSED PROFESSIONAL ENGINEER
JACK T. PHIPPS
11626
OKLAHOMA

PE RENEWAL 10/31/22 | NEXIUS SOLUTIONS, INC. OKLAHOMA FIRM NUMBER 7540 RENEWAL DATE 06/30/23 | DATE SIGNED: 03/17/22

PROJECT STATUS:
FOR CONSTRUCTION
NEXIUS SOLUTIONS, INC. IS REGISTERED IN OK

PRELIMINARY: NOT FOR CONSTRUCTIO

SUBMITTALS

REV	DATE	DESCRIPTION	BY
A	01/20/22	CD FOR REVIEW	JF
0	03/17/22	FINAL CD	JF

SITE INFORMATION:

SITE NAME:
NICHOLS HILLS

SITE NUMBER:
OK1085

SITE ADDRESS:
1009 NORTHWEST 75TH
NICHOLS HILLS, OK 73116

SITE COORDINATES:
35.549281° / –97.529208°

SHEET TITLE:
EQUIPMENT DETAILS

SHEET NUMBER:
EQ-1

Attachment: PC-2022-03 Packet (5952 : AT&T - Special Permit Application)

THIS DOCUMENT IS THE DESIGN PROPERTY AND COPYRIGHT OF NEXIUS AND FOR THE EXCLUSIVE USE BY THE TITLE CLIENT. DUPLICATION OR USE WITHOUT THE EXPRESS WRITTEN CONSENT OF THE CREATOR IS STRICTLY PROHIBITED. DRAWING SCALES ARE INTENDED FOR 22"x34" SIZE PRINTED MEDIA ONLY. 11"x17" IS DEEMED HALF SCALE, AND ALL OTHER PRINTED SIZES ARE DEEMED "NOT TO SCALE".

DocuSign Envelope ID: 4A3B1FAB-27F3-4715-920D-27A5597DDB38

GENERAL CONSTRUCTION

1. ALL SITE WORK SHALL BE COMPLETED AS INDICATED ON THE DRAWINGS AND PROJECT SPECIFICATIONS.
2. GENERAL CONTRACTOR SHALL VISIT THE SITE AND FAMILIARIZE HIMSELF WITH ALL CONDITIONS AFFECTING THE PROPOSED WORK. GENERAL CONTRACTOR IS RESPONSIBLE FOR FAMILIARIZING HIMSELF WITH ALL CONTRACT DOCUMENTS, FIELD CONDITIONS, DIMENSIONS, AND CONFIRMING THAT THE WORK MAY BE ACCOMPLISHED AS SHOWN PRIOR TO PROCEEDING WITH CONSTRUCTION. ANY DISCREPANCIES SHALL BE BROUGHT TO THE ATTENTION OF THE ENGINEER PRIOR TO THE COMMENCEMENT OF WORK.
3. ALL MATERIALS FURNISHED AND INSTALLED SHALL BE IN STRICT ACCORDANCE WITH ALL APPLICABLE CODES, REGULATIONS, ORDINANCES, AND ISSUE ALL APPROPRIATE NOTICES.
4. ALL WORK CARRIED OUT SHALL COMPLY WITH ALL APPLICABLE MUNICIPAL AND UTILITY COMPANY SPECIFICATIONS AND LOCAL JURISDICTIONAL CODES, ORDINANCES, AND APPLICABLE REGULATIONS.
5. PLANS ARE NOT TO BE SCALED. SPACING BETWEEN EQUIPMENT IS THE MINIMUM REQUIRED CLEARANCE. THEREFORE, IT IS CRITICAL TO FIELD VERIFY DIMENSIONS, SHOULD THERE BE ANY QUESTIONS REGARDING THE CONTRACT DOCUMENTS, THE CONTRACTOR SHALL BE RESPONSIBLE FOR OBTAINING A CLARIFICATION FROM THE ENGINEER PRIOR TO PROCEEDING WITH THE WORK. DETAILS ARE INTENDED TO SHOW DESIGN INTENT. MODIFICATIONS MAY BE REQUIRED TO SUIT JOB DIMENSIONS OR CONDITIONS AND SUCH MODIFICATIONS SHALL BE INCLUDED AS PART OF WORK AND PREPARED BY THE ENGINEER PRIOR TO PROCEEDING WITH WORK.
6. THE CONTRACTOR SHALL INSTALL ALL EQUIPMENT AND MATERIALS IN ACCORDANCE WITH MANUFACTURER'S RECOMMENDATIONS UNLESS SPECIFICALLY STATED OTHERWISE.
7. IF THE SPECIFIED EQUIPMENT CANNOT BE INSTALLED AS SHOWN ON THESE DRAWINGS, THE CONTRACTOR SHALL PROPOSE AN ALTERNATIVE INSTALLATION SPACE FOR APPROVAL BY THE ENGINEER PRIOR TO PROCEEDING.
8. CONTRACTOR SHALL NOTIFY THE GENERAL CONTRACTOR OF ANY EXISTING CONDITIONS THAT DEVIATE FROM THE DRAWINGS PRIOR TO BEGINNING CONSTRUCTION.
9. GENERAL CONTRACTOR SHALL BE RESPONSIBLE FOR THE SAFETY OF WORK AREA, ADJACENT AREAS AND BUILDING OCCUPANTS THAT ARE LIKELY TO BE AFFECTED BY THE WORK UNDER THIS CONTRACT. WORK SHALL CONFIRM TO ALL OSHA REQUIREMENTS AND THE LOCAL JURISDICTION.
10. GENERAL CONTRACTOR SHALL COORDINATE WORK AND SCHEDULE WORK ACTIVITIES WITH OTHER DISCIPLINES.
11. WORK SHALL BE DONE IN A PROFESSIONAL MANNER BY COMPETENT EXPERIENCED PERSONNEL IN ACCORDANCE WITH APPLICABLE CODES AND THE BEST ACCEPTED PRACTICE.
12. SEAL PENETRATIONS THROUGH FIRE RATED AREAS WITH UL LISTED MATERIALS APPROVED BY LOCAL JURISDICTION. CONTRACTOR SHALL KEEP AREA CLEAN, HAZARD FREE, AND DISPOSE OF ALL DEBRIS.
13. CONTRACTOR SHALL PROVIDE WRITTEN NOTICE TO THE CONSTRUCTION MANAGER 48 HOURS PRIOR TO COMMENCEMENT OF WORK.
14. THE CONTRACTOR SHALL PROTECT EXISTING IMPROVEMENTS, PAVEMENTS, CURBS, LANDSCAPING AND STRUCTURES. ANY DAMAGED PART SHALL BE REPAIRED AT CONTRACTOR'S EXPENSE TO THE SATISFACTION OF THE OWNER.
15. THE CONTRACTOR SHALL CONTACT UTILITY LOCATING SERVICES PRIOR TO THE START OF CONSTRUCTION.
16. GENERAL CONTRACTOR SHALL COORDINATE AND MAINTAIN ACCESS FOR ALL TRADES AND CONTRACTORS TO THE SITE AND/OR BUILDING.
17. THE GENERAL CONTRACTOR SHALL BE RESPONSIBLE FOR SECURITY OF THE SITE FOR THE DURATION OF CONSTRUCTION UNTIL JOB COMPLETION.
18. CONTRACTORS SHALL BE RESPONSIBLE FOR OBTAINING ALL PERMITS AND INSPECTIONS REQUIRED FOR CONSTRUCTION. IF CONTRACTOR CANNOT OBTAIN A PERMIT, THEY MUST NOTIFY THE GENERAL CONTRACTOR IMMEDIATELY.
19. THE GENERAL CONTRACTOR SHALL MAINTAIN IN GOOD CONDITION ONE COMPLETE SET OF PLANS WITH ALL REVISIONS, ADDENDA, AND CHANGE ORDERS ON THE PREMISES AT ALL TIMES.
20. THE GENERAL CONTRACTOR SHALL PROVIDE PORTABLE FIRE EXTINGUISHERS WITH A RATING OF NOT LESS THAN 2-A TO 2-A:10-B:C AND SHALL BE WITHIN 25 FEET OF TRAVEL DISTANCE TO ALL PORTIONS OF WHERE THE WORK IS BEING COMPLETED DURING CONSTRUCTION.
21. ALL EXISTING ACTIVE SEWER, WATER, GAS, ELECTRIC, COMMUNICATIONS, AND OTHER UTILITIES SHALL BE PROTECTED AT ALL TIMES, AND WHERE REQUIRED FOR THE PROPER EXECUTION OF THE WORK, SHALL BE RELOCATED AS DIRECTED BY THE ENGINEER. EXTREME CAUTION SHOULD BE USED BY THE CONTRACTOR WHEN EXCAVATING OR DRILLING PIERS AROUND OR NEAR UTILITIES. CONTRACTOR SHALL PROVIDE SAFETY TRAINING FOR THE WORKING CREW. THIS SHALL INCLUDE BUT NOT BE LIMITED TO: FALL PROTECTION, CONFINED SPACE, ELECTRICAL SAFETY, AND TRENCHING / EXCAVATION.
22. ALL EXISTING INACTIVE SEWER, WATER, GAS, ELECTRIC, AND OTHER UTILITIES WHICH INTERFERE WITH THE EXECUTION OF THE WORK, SHALL BE REMOVED, CAPPED, PLUGGED OR OTHERWISE DISCONNECTED AT POINTS WHICH WILL NOT INTERFERE WITH THE EXECUTION OF THE WORK, AS DIRECTED BY THE RESPONSIBLE ENGINEER, AND SUBJECT TO THE APPROVAL OF THE OWNER AND/OR LOCAL UTILITIES.
23. CONTRACTOR SHALL MINIMIZE DISTURBANCE TO THE EXISTING SITE DURING CONSTRUCTION. EROSION CONTROL MEASURES, IF REQUIRED DURING CONSTRUCTION, SHALL BE IN CONFORMANCE WITH THE FEDERAL AND LOCAL JURISDICTION FOR EROSION AND SEDIMENT CONTROL.
24. THE AREAS OF THE OWNER'S PROPERTY DISTURBED BY THE WORK SHALL BE GRADED TO A UNIFORM SLOPE AND STABILIZED TO PREVENT EROSION.
25. NO FILL OR EMBANKMENT MATERIAL SHALL BE PLACED ON FROZEN GROUNDING. FROZEN MATERIALS, SNOW OR ICE SHALL NOT BE PLACED IN ANY FILL OR EMBANKMENT.
26. THE SUBGRADE SHALL BE BROUGHT TO A SMOOTH UNIFORM GRADE AND COMPACTED TO 95 PERCENT STANDARD PROCTOR DENSITY UNDER PAVEMENT AND STRUCTURES AND 80 PERCENT STANDARD PROCTOR DENSITY IN OPEN SPACE.
27. ALL TRENCHES IN PUBLIC RIGHT OF WAY SHALL BE BACKFILLED WITH FLOWABLE FILL OR OTHER MATERIAL PRE-APPROVED BY THE LOCAL JURISDICTION.
28. ALL NECESSARY RUBBISH, STUMPS, DEBRIS, STICKS, STONES, AND OTHER REFUSE SHALL BE REMOVED FROM THE SITE AND DISPOSED OF IN A LAWFUL MANNER.
29. ALL BROCHURES, OPERATING AND MAINTENANCE MANUALS, CATALOGS, SHOP DRAWINGS, AND OTHER DOCUMENTS SHALL BE TURNED OVER TO THE GENERAL CONTRACTOR AT COMPLETION OF CONSTRUCTION AND PRIOR TO PAYMENT.
30. CONTRACTOR SHALL SUBMIT A COMPLETE SET OF AS-BUILT REDLINES TO THE GENERAL CONTRACTOR UPON COMPLETION OF PROJECT AND PRIOR TO FINAL PAYMENT.
31. NO OUTDOOR STORAGE OR SOLID WASTE CONTAINERS ARE PROPOSED.
32. ALL MATERIAL SHALL BE FURNISHED AND WORK SHALL BE PERFORMED IN ACCORDANCE WITH THE LATEST GROUNDING STANDARD.
33. CONTRACTOR SHALL REMOVE ALL TRASH AND DEBRIS FROM THE SITE ON A DAILY BASIS.
34. INFORMATION SHOWN ON THESE DRAWINGS WAS OBTAINED FROM SITE VISITS AND/OR DRAWINGS PROVIDED BY THE SITE OWNER.
35. CONTRACTORS SHALL NOTIFY THE ENGINEER OF ANY DISCREPANCIES PRIOR TO ORDERING MATERIAL OR PROCEEDING WITH CONSTRUCTION.
36. ALL CABLE INSTALLATIONS TO FOLLOW MANUFACTURER'S INSTRUCTIONS AND RECOMMENDATIONS.

ANTENNA MOUNTING

1. DESIGN AND CONSTRUCTION OF ANTENNA SUPPORTS SHALL CONFORM TO CURRENT ANSI/TIA-222 OR APPLICABLE LOCAL CODES.
2. ALL STEEL MATERIALS SHALL BE GALVANIZED AFTER FABRICATION IN ACCORDANCE WITH ASTM A123 "ZINC (HOT-DIP GALVANIZED) COATINGS ON IRON AND STEEL PRODUCTS", UNLESS NOTED OTHERWISE.
3. ALL BOLTS, ANCHORS AND MISCELLANEOUS HARDWARE SHALL BE GALVANIZED IN ACCORDANCE WITH ASTM A153 "ZINC-COATING (HOT-DIP) ON IRON AND STEEL HARDWARE", UNLESS NOTED OTHERWISE.
4. DAMAGED GALVANIZED SURFACES SHALL BE REPAIRED BY COLD GALVANIZING IN ACCORDANCE WITH ASTM A780.
5. ALL ANTENNA MOUNTS SHALL BE INSTALLED WITH LOCK NUTS, DOUBLE NUTS AND SHALL BE TORQUED TO MANUFACTURER'S RECOMMENDATIONS.
6. CONTRACTOR SHALL INSTALL ANTENNA PER MANUFACTURER'S RECOMMENDATION FOR INSTALLATION AND GROUNDING.
7. PRIOR TO SETTING ANTENNA AZIMUTHS AND DOWNTILTS, ANTENNA CONTRACTOR SHALL CHECK THE ANTENNA MOUNT FOR TIGHTNESS AND ENSURE THAT THEY ARE PLUMB. ANTENNA AZIMUTHS SHALL BE SET FROM TRUE NORTH AND BE ORIENTED WITHIN +/- 5% AS DEFINED BY THE RFDS. ANTENNA DOWNTILTS SHALL BE WITHIN +/- 0.5% AS DEFINED BY THE RFDS. REFER TO ND-00246.
8. MAINTAIN A MINIMUM OF 3 FEET SEPARATION BETWEEN ALL ANTENNAS. IF 3 FEET IS NOT OBTAINABLE BETWEEN ANY OF THE ANTENNAS, NOTIFY VELEX CM FOR FURTHER DIRECTION.

TORQUE REQUIREMENTS

1. ALL RF CONNECTIONS SHALL BE TIGHTENED WITH A TORQUE WRENCH AND A TORQUE MARK INDICATED ON BOTH SIDES OF THE CONNECTION.
2. ALL GROUNDING AND ANTENNA HARDWARE SHALL ALL BE TIGHTENED WITH A TORQUE WRENCH AND A TORQUE MARK INDICATED ON THE NUT SIDE STARTING FROM THE THREADS TO THE SOLID SURFACE. TORQUE TO THE FOLLOWING VALUES:
   - 2.1. ALL 5/16" ANTENNA HARDWARE TIGHTENED TO 9 FT-LBS.
   - 2.2. ALL 1/2" ANTENNA HARDWARE TIGHTENED TO 43 FT-LBS.
   - 2.3. ALL DIN-TYPE CONNECTIONS TIGHTENED TO 18-22 FT-LBS.
   - 2.4. ALL N-TYPE CONNECTIONS TIGHTENED TO 15-20 IN-LBS.

COAXIAL CABLE NOTES

1. TYPES AND SIZES OF THE ANTENNA CABLE ARE BASED ON ESTIMATED LENGTHS. PRIOR TO ORDERING CABLE, CONTRACTOR SHALL VERIFY ACTUAL LENGTH BASED ON CONSTRUCTION LAYOUT AND NOTIFY THE PROJECT MANAGER IF ACTUAL LENGTHS EXCEED ESTIMATED LENGTHS.
2. CONTRACTOR SHALL VERIFY THE DOWNTILTS OF EACH ANTENNA WITH A DIGITAL LEVEL.
3. CONTRACTOR SHALL CONFIRM COAX COLOR CODING PRIOR TO CONSTRUCTION. REFER TO "ANTENNA SYSTEM LABELING STANDARD" ND-00027 LATEST VERSION.
4. USE 1/2" COAX ON ANTENNAS UNLESS OTHERWISE SPECIFIED.
5. FILL VOID AROUND CABLES AT CONDUIT OPENING WITH FOAM SEALANT TO PREVENT WATER INTRUSION.
6. ALL COAXIAL CABLE SHALL BE SECURED TO THE DESIGNED SUPPORT STRUCTURE, IN AN APPROVED MANNER, AT DISTANCES NOT TO EXCEED 4'-0".
7. CONTRACTOR SHALL FOLLOW ALL MANUFACTURER'S RECOMMENDATIONS REGARDING BOTH THE INSTALLATION AND GROUNDING OF ALL COAXIAL CABLES, CONNECTORS, ANTENNAS, AND ALL OTHER EQUIPMENT.
8. ALL OUTDOOR RF CONNECTIONS SHALL BE WEATHERPROOFED USING COLD SHRINK OR HEAT SHRINK ON ALL ANTENNA AND RADIO CONNECTIONS,

GENERAL CABLE AND EQUIPMENT NOTES

1. PRIOR TO INSTALLATION CONTRACTOR SHALL VERIFY MAKE AND MODEL OF ANTENNA, DIPLEXERS, AND COAX CONFIGURATION.
2. ALL CONNECTIONS FOR HANGERS, SUPPORTS, BRACING, ETC. SHALL BE INSTALLED PER MANUFACTURER'S RECOMMENDATIONS.
3. CONTRACTOR SHALL REFERENCE THE STRUCTURAL ANALYSIS/DESIGN DRAWINGS FOR DIRECTIONS ON CABLE DISTRIBUTION/ROUTING.
4. IF REQUIRED TO PAINT ANTENNAS AND/OR COAX:
   - 4.1. TEMPERATURE SHALL BE ABOVE 50° F.
   - 4.2. PAINT COLOR MUST BE APPROVED BY BUILDING OWNER/LANDLORD.
   - 4.3. FOR REGULATED TOWERS, FAA/FCC APPROVED PAINT IS REQUIRED.
   - 4.4. DO NOT PAINT OVER COLOR CODING OR ON EQUIPMENT MODEL NUMBERS.
5. ALL PROPOSED GROUND BAR DOWNLEADS ARE TO BE TERMINATED TO THE EXISTING ADJACENT GROUND BAR DOWNLEADS A MINIMUM DISTANCE OF 4'-0" BELOW GROUND BAR. TERMINATIONS MAY BE EXOTHERMIC OR COMPRESSION.
6. NO BOLT THREADS TO PROTRUDE MORE THAN 1-1/2".

PREPARED BY:
nexius
NEXIUS SOLUTIONS, INC.
2595 NORTH DALLAS PARKWAY
SUITE 300
FRISCO, TX 75034

CLIENT:
AT&T Mobility
1700 CANTRELL ROAD,
LITTLE ROCK, AR 72223

LICENSED PROFESSIONAL ENGINEER
JACK T. PHIPPS
11626
OKLAHOMA

PE RENEWAL 10/31/22 | NEXIUS SOLUTIONS, INC. OKLAHOMA FIRM NUMBER 7540 RENEWAL DATE 06/30/23 | DATE SIGNED: 03/17/22

PROJECT STATUS:
FOR CONSTRUCTION
NEXIUS SOLUTIONS, INC. IS REGISTERED IN OK

PRELIMINARY: NOT FOR CONSTRUCTIO

SUBMITTALS

REV	DATE	DESCRIPTION	BY
A	01/20/22	CD FOR REVIEW	JF
0	03/17/22	FINAL CD	JF

SITE INFORMATION:

SITE NAME:
NICHOLS HILLS

SITE NUMBER:
OK1085

SITE ADDRESS:
1009 NORTHWEST 75TH
NICHOLS HILLS, OK 73116

SITE COORDINATES:
35.549281° / -97.529208°

SHEET TITLE:
GENERAL NOTES

SHEET NUMBER:
GN-1

Attachment: PC-2022-03 Packet (5952 : AT&T - Special Permit Application)

THIS DOCUMENT IS THE DESIGN PROPERTY AND COPYRIGHT OF NEXIUS AND FOR THE EXCLUSIVE USE BY THE TITLE CLIENT. DUPLICATION OR USE WITHOUT THE EXPRESS WRITTEN CONSENT OF THE CREATOR IS STRICTLY PROHIBITED. DRAWING SCALES ARE INTENDED FOR 22"x34" SIZE PRINTED MEDIA ONLY. 11"x17" IS DEEMED HALF SCALE, AND ALL OTHER PRINTED SIZES ARE DEEMED "NOT TO SCALE".

March 11, 2022

Hazel Mauro
Nexius Solutions, INC
1025 South Beltline Rd.,
Coppell, TX 75019
(913) 710-3999

B+T Group
1717 S. Boulder, Suite 300
Tulsa, OK 74119
(918) 587-4630
towersupport@btgrp.com

Subject:	**Water Tower Structural Letter**	
Carrier Designation:	**Site Number:** **Site Name:**	10000548 Nichols Hills
Engineering Firm Designation:	**B+T Group Project Number:**	160843.002.01
Site Data:	**1009 Northwest 75th, Nichols Hills, OK, 73116, Oklahoma County** **Latitude *35.54928*°, Longitude -97.52920°** **Water Tank**	

Dear Ms. Mauro,

B+T Group is pleased to submit this **"Structural Letter"** to determine the structural integrity of the above-mentioned water tower supported telecommunications site.

The purpose of the assessment is to determine acceptability of the water tower to sufficiently support the telecommunications equipment presented in this report. Based on our professional opinion we have determined the suitability for the structure, under the following load case, to be:

Existing + Proposed Equipment **Sufficient Capacity**
Note: See Table 1 for the proposed and existing loading.

The assessment has been performed in accordance with the ASCE 7 standard and the 2018 International Building Code.

All equipment proposed in this report shall be installed in accordance with the drawings for the determined available structural capacity to be effective.

We at *B+T Group* appreciate the opportunity of providing our continuing professional services to you and *Nexius Solutions, INC.* If you have any questions or need further assistance on this or any other projects, please give us a call.

Structural Letter prepared by: Joseph Variamparampil

Respectfully submitted by: B&T Engineering, Inc.
COA: CA 3590 (PE) Expires: 06/30/2022

LICENSED PROFESSIONAL ENGINEER
BRAD ROBERT MILANOWSKI
11379
OKLAHOMA
3/11/22

Brad R. Milanowski, P.E.

Attachment: PC-2022-03 Packet (5952 : AT&T - Special Permit Application)

TABLE OF CONTENTS

1) INTRODUCTION

2) ASSESSMENT CRITERIA
- Table 1 - Proposed Antenna Information
- Table 2 - Documents Provided

3) ASSESSMENT PROCEDURE
- 3.1) Assessment Method
- 3.2) Assumptions

4) ASSESSMENT RESULTS
- 4.1) Recommendations

Attachment: PC-2022-03 Packet (5952 : AT&T - Special Permit Application)

1) INTRODUCTION

The proposed telecommunications equipment will be located on the water tower at 1009 Northwest 75th, Nichols Hills, OK, 73116, Oklahoma County. There are existing telecommunications antennas mounted on the water tower. The proposed antenna loading information was obtained from Nexius Solutions, INC. All information provided to B+T Group was assumed accurate and complete.

2) ASSESSMENT CRITERIA

The structural assessment was performed for this structure in accordance with the 2018 International Building Code and the ASCE 7 Design Standard. The TIA-222-H apply to telecommunications towers. Although telecommunications equipment is present, this structure is primarily a water tower and is more appropriately assessed with the ASCE 7 Standard.

Table 1 – Proposed and Existing Equipment Information

Loading	RAD Center Elev. (ft.)	Position	Qty.	Manufacturer	Model / Type	Note
Proposed	129	3	3	Ericsson	AIR6449 B77D	1
		3	3	Ericsson	AIR6419 B77G	
		4	3	CCI	TPA65R-BU8D	
		4	3	Ericsson	4449 B5/B12	2
		-	3	Raycap	DC2-48-60-0-9E	3
		-	1	Raycap	FC12-PC6-10E	
Existing	129	1,2	6	Kathrein	80010799	4
		-	3	Ericsson	4478 B14	5
		-	3	Ericsson	RRUS-32 B2	
		2	3	Ericsson	RRUS-32 B66A	
		4	3	Ericsson	RRUS-32 B30	
		-	3	Raycap	FC12-PC6-10E	6
		-	9	Raycap	DC2-48-60-0-9E	

Note:
(1) Proposed Antenna to be installed on the existing Mount Pipe.
(2) Proposed Equipment to be installed side by side with RRUS Support, directly behind the Antenna.
(3) Proposed Equipment installed on the railing.
(4) Existing Antenna to be installed on the existing Mount Pipe.
(5) Existing Equipment to be installed side by side with RRUS Support, directly behind the Antenna.
(6) Existing Equipment installed on the railing.

Table 2 - Documents Provided

Documents	Remarks	Reference	Source
RFDS	Existing Loading Proposed Loading	Date:12/27/2021	Nexius Solutions, INC.
CD's by Nexius		Date: 01/20/2022	
Mount Mapping	B+T Group	Date: 07/22/2016	On File
Mount Modification		Date: 11/11/2016	
Mount Analysis		Date: 02/24/2022	

Attachment: PC-2022-03 Packet (5952 : AT&T - Special Permit Application)

3) ASSESSMENT PROCEDURE

3.1) Assessment Method

This water tower is a substantial structure designed and fabricated to support thousands of gallons of water in addition to its own self weight. The nature and intended purpose of the structure is substantially greater than the addition of the telecommunication equipment. The proposed equipment will be installed on mount pipes on the Catwalk. The mount analysis was not performed as part of the report. The additional weight from the proposed loading is approximately 257 lbs per sector. For wind loads, the additional area exposed to the wind for the proposed loading is 22 sq. ft. per sector. The increase in weight and area exposed to wind is negligible and will not have a significant impact on the structural integrity of the Water tower.

3.2) Assumptions

1) The structure was built in accordance with the designer's specifications.
2) The structure has been maintained and is free of damage.
3) The configuration of antennas, mounts and other appurtenances are as specified in Table 1 and the referenced drawings.
4) All mount components have been assumed to be in sufficient condition to carry their full design capacity for the assessment.
5) All prior structural modifications if any are assumed to be correctly installed and fully effective.

This analysis may be affected if any assumptions are not valid or have been made in error. B+T Group should be notified to determine the effect on the structural integrity of the antenna mounting system.

4) ASSESSMENT RESULTS

4.1) Recommendations

1) The proposed equipment shall be installed on the mounts in accordance with the installation drawings.

Attachment: PC-2022-03 Packet (5952 : AT&T - Special Permit Application)

OKL01085 / NICHOLS HILLS / 5G NR 1SR Cband
Scope of Work

Narrative of the SOW

Alpha, Beta, Gamma:
Remove 1x existing RRUS-12 B5 from POS2.
Remove 1x existing SBNHH-1D65C antenna from POS4.
Remove 1x existing RRUS-11 B12 from POS4.

Remount 1x existing RRUS-32 B30 (LTE 2300) on POS4 mounted on a new dual bracket. Connect ports to antenna on POS4.

Add 1x new AIR6449 N77D and 1x new AIR6419 N77G on POS3 mounted above each other stacked.
Add 1x new TPA65R-BU8D antenna on POS4 mounted on an existing pipe.
Add 1x new RRUS-4449 B5/B12 (LTE 700, LTE 850) mounted back-to-back with RRUS-32 B30.

Add 1x new DC2 per sector. Add 1x new FC12, add 2x new 6AWG6 DC Trunks.
Use existing Fiber Trunks.

Attachment: PC-2022-03 Packet (5952 : AT&T - Special Permit Application)

Equipment	Height	Width	Depth	Weight	Status	Quantity
Kathrein 80010799	106"	14.8"	6.7"	108lbs	Current, to remain	6
Commscope SBNHH-1D65C	96"	11.9"	7.1"	49.6lbs	Current, to be removed	3
4478 B14	15"	13.2"	7.3"	59.4lbs	Current, to remain	3
RRUS-32 B2	27.2"	12.1"	7.0"	53lbs	Current, to remain	3
RRUS-12 B5	20.39"	18.5"	7.36"	49.38lbs	Current, to be removed	3
RRUS-32 B66A	27.2"	12.1"	7.0"	53lbs	Current, to remain	3
RRUS-11 B12	19.68"	16.96"	7.1"	55lbs	Current, to be removed	3
RRUS-32 B30	27.2"	12.1"	7.0"	53lbs	Current, to remain	3
Ericsson AIR6449 B77D + AIR6419 B77G	72"	15.9"	8.1"	147.7lbs	Proposed	3
4449 B5/B12	17.9"	13.19"	9.44"	71lbs	Proposed	3
CCI TPA65R-BU8D	96"	21"	7.8"	82.5lbs	Proposed	3

Attachment: PC-2022-03 Packet (5952 : AT&T - Special Permit Application)

Larry Stein
Oklahoma County Assessor's Office

Ownership Radius Report

This Official Report is for Account Number R073698400 and is a 300-foot radius from the outside of the polygon. If the minimum number of different owners was not reached it was extended by 100-foot increments until the required number of different owners was reached, or the maximum distance was reached. This report does not constitute a legal survey or document, for definitive description of real property and ownership; consult the deeds recorded in the Oklahoma County Clerks Office. Official Record of this Certified Radius Report will expire 30 days from the date of creation stamped on the back of this sheet.

Attachment: PC-2022-03 Packet (5952 : AT&T - Special Permit Application)

Attachment: PC-2022-03 Packet (5952 : AT&T - Special Permit Application)

STATE OF OKLAHOMA
COUNTY OF OKLA } ss:

I, the duly elected, qualified and acting County Assessor, in and for the County and State aforesaid, do hereby certify that the within and foregoing is a full, true and complete copy of 300ft Radius Area filed in the office of the County Assessor on the 18 day of July, 2022

Given under my hand and official seal this 18 day of July, 2022

County Assessor

Deputy

Oklahoma County Assessor's
300ft Radius Report
7/18/2022

accountno	name1	name2	mailingaddress1	Shape	city	state	zipcode	subname	block	lot	legal	location
R169571296	JENNINGS THADEUS S & CAROL R TRS	JENNINGS THADEUS & CAROL REV LIV TRUST	18266 CARLTON WAY		EDMOND	OK	73012-9219	NICHOLS HILLS ADD	012	001	NICHOLS HILLS ADD 012 001	1100 HEMSTEAD PL NICHOLS HILLS
R073697200	OKLAHOMA HUMANE SOCIETY		PO BOX 18471		OKLAHOMA CITY	OK	73154-0471	COLONIAL HEIGHTS ADD	012	000	COLONIAL HEIGHTS ADD 012 000 W15FT OF LOT 21 & ALL OF LOTS 22 THRU 26	7500 N WESTERN AVE, Unit A OKLAHOMA CITY
R073697100	THORNHILL GORDON SUC TRS	THORNHILL CECIL & BERNITA TRUST	2501 CROSSING DR		EDMOND	OK	73013	COLONIAL HEIGHTS ADD	012	000	COLONIAL HEIGHTS ADD 012 000 LOTS 17 THRU 21 EX W15FT OF LOT 21	919 NW 74TH ST OKLAHOMA CITY
R073696710	STANDARD PRINTING INC		905 NW 74TH ST		OKLAHOMA CITY	OK	73116-7046	COLONIAL HEIGHTS ADD	012	000	COLONIAL HEIGHTS ADD 012 000 W19FT OF LOT 15 & ALL LOT 16	905 NW 74TH ST OKLAHOMA CITY
R073696705	MUSGRAVE PROPERTIES LLC		4200 ROCK CANYON RD		EDMOND	OK	73025-2935	COLONIAL HEIGHTS ADD	012	000	COLONIAL HEIGHTS ADD 012 000 LOTS 13 & 14 & E6.3FT OF LOT 15	901 NW 74TH ST OKLAHOMA CITY
R073696700	MUSGRAVE PROPERTIES LLC		4200 ROCK CANYON RD		EDMOND	OK	73025-2935	COLONIAL HEIGHTS ADD	012	000	COLONIAL HEIGHTS ADD 012 000 LOTS 7 THRU 12	7500 N CLASSEN BLVD OKLAHOMA CITY
R169793028	BANK OF OKLAHOMA NA	ATTN PROPERTY TAX ADMIN	PO BOX 2300		TULSA	OK	74192	UNPLTD PT SEC 05 12N 3W	000	000	UNPLTD PT SEC 05 12N 3W 000 000 PT NE4 SEC 5 12N 3W BEG 33FT W OF ELY R/W LINE WESTERN AVE & N R/W LINE HEMSTEAD PL TH NWLY ALONG E R/W LINE 133.71FT TH E52.34FT S123FT TO BEG	0 UNKNOWN NICHOLS HILLS
R073697400	MOON LAKE INC		7516 N WESTERN AVE		OKLAHOMA CITY	OK	73116	COLONIAL HEIGHTS ADD	012	000	COLONIAL HEIGHTS ADD 012 000 LOTS 27 THRU 33	7512 N WESTERN AVE OKLAHOMA CITY
R073697600	TIMBERLAKE CONSTN CO INC		PO BOX 18297		OKLAHOMA CITY	OK	73154-0297	COLONIAL HEIGHTS ADD	012	000	COLONIAL HEIGHTS ADD 012 000 LOTS 34 THRU 37	914 NW 75TH ST OKLAHOMA CITY
R073697700	MANSFIELD INVESTMENTS LLC		7521 N CLASSEN BLVD		OKLAHOMA CITY	OK	73116-7057	COLONIAL HEIGHTS ADD	012	000	COLONIAL HEIGHTS ADD 012 000 LOTS 38 & 39 PLUS PT OF N&S ALLEY & E&W ALLEY BEG NE/C LT 39 TH ELY20.19FT SELY TO SW/C LT 6 WLY87.64FT NLY10FT TO SW/C LT 38 TH ELY66.12FT TO SE/C LT 39 TH NWLY141.38FT T	906 NW 75TH ST OKLAHOMA CITY
R073696400	MANSFIELD INVESTMENTS LLC		7521 N CLASSEN BLVD		OKLAHOMA CITY	OK	73116-7057	COLONIAL HEIGHTS ADD	012	000	COLONIAL HEIGHTS ADD 012 000 LOTS 1 THRU 6	7521 N CLASSEN BLVD OKLAHOMA CITY
R169571738	BILLMAN KENDALL	BILLMAN JENNIFER	1103 HEMSTEAD PL		NICHOLS HILLS	OK	73116-6210	NICHOLS HILLS ADD	013	000	NICHOLS HILLS ADD 013 000 ALL OF LOT 28 & PT OF LOT 29 BEG SW/C LT 29 TH N165FT E2.16FT SLY165FT W1.61FT TO BEG	1103 HEMSTEAD PL NICHOLS HILLS
R169571740	SMITH BRETT M		1101 HEMSTEAD PL		NICHOLS HILLS	OK	73116	NICHOLS HILLS ADD	013	000	NICHOLS HILLS ADD 013 000 LOT 29 EX A TR BEG SW/C LT 29 TH N165FT E2.16FT SLY165FT W1.61FT TO BEG	1101 HEMSTEAD PL NICHOLS HILLS

Oklahoma County Assessor's
300ft Radius Report
7/18/2022

R169793025	AZ RX REAL ESTATE LLC		1905 DANFIELD DR		NORMAN	OK	73072	UNPLTD PT SEC 05 12N 3W	000	000	UNPLTD PT SEC 05 12N 3W BLK 000 LOT 000 PT NE4 SEC 5 12N 3W BEG 33FT W & 123FT N OF ELY R/W LINE WESTERN AVE & N LINE HEMSTEAD PL TH N80FT W96.80FT SE ON A CURVE 91.80FT E52.34FT TO BEG	7600 N WESTERN AVE NICHOLS HILLS
R169793030	AZ RX REAL ESTATE LLC		1905 DANFIELD DR		NORMAN	OK	73072	UNPLTD PT SEC 05 12N 3W	000	000	UNPLTD PT SEC 05 12N 3W 000 000 PT NE4 SEC 5 12N 3W BEG 203FT N OF INTER ELY R/W LINE WESTERN AV & N R/W LINE HEMSTEAD PL EXTENDED TH W96.8FT NWLY10.62FT E101.66FT S9.85FT TO BEG	7600 N WESTERN AVE NICHOLS HILLS
R216091310	BURLINGTON CROSSING LLC		9120 N KELLEY AVE STE 100		OKLAHOMA CITY	OK	73131-2440	WILSHIRE POINT	005	006	WILSHIRE POINT BLK 005 LOT 006	7500 N CLASSEN BLVD OKLAHOMA CITY
R169792990	76NWESTERN LLC		PO BOX 75896		OKLAHOMA CITY	OK	73147-0896	UNPLTD PT SEC 05 12N 3W	000	000	UNPLTD PT SEC 05 12N 3W 000 000 PT NE4 SEC 5 12N 3W BEG 33FT W & 314.13FT N INTER ELY R/W WESTERN AV & N R/W HEMSTEAD PL EXT TH W154.03FT SLY 114.38FT E101.66FT N101.28FT TO BEG	7602 N WESTERN AVE NICHOLS HILLS
R169571540	WEHBA DEBRA L REV TRUST		1100 HUNTINGTON AVE		NICHOLS HILLS	OK	73116-6213	NICHOLS HILLS ADD	013	001	NICHOLS HILLS ADD 013 001	1100 HUNTINGTON AVE NICHOLS HILLS
R073698400	CITY OF NICHOLS HILLS		6407 AVONDALE DR		NICHOLS HILLS	OK	73116-6431	COLONIAL HEIGHTS ADD	013	000	COLONIAL HEIGHTS ADD 013 000 LOTS 13 THRU 35 PLUS S33FT OF VACATED 76TH STREET ADJ LOTS 25 THRU 35 ON N & THAT PORTION OF WLY HALF OF VACATED ALLEY EXTENDING NLY & SLY ADJ TO E LINE LOT 35	1009 NW 75TH ST OKLAHOMA CITY
R073697900	NIGHTHAWK INVESTMENTS LLC		7613 N CLASSEN BLVD		OKLAHOMA CITY	OK	73116-7009	COLONIAL HEIGHTS ADD	013	000	COLONIAL HEIGHTS ADD 013 000 LOTS 4 THRU 12 PLUS 20FT OF VACATED ALLEY ADJ ON W	7613 N CLASSEN BLVD OKLAHOMA CITY
R169792995	HINTON NORMA J & JAMES A TRS	NORMA J HINTON FAMILY TRUST	6913 N WATERWOOD WAY		WARR ACRES	OK	73132-6528	UNPLTD PT SEC 05 12N 3W	000	000	UNPLTD PT SEC 05 12N 3W 000 000 PT NE4 SEC 5 12N 3W BEG 314.13FT N OF INTERS OF ELY R/W WESTERN AVE & N R/W OF HEMSTEAD PL EXT TH W154.03FT NWLY 171.77FT E237.90FT S150FT TO BEG KNOWN AS TR 1 CONT .67	7612 N WESTERN AVE NICHOLS HILLS
R073697800	NIGHTHAWK INVESTMENTS LLC		7613 N CLASSEN BLVD		OKLAHOMA CITY	OK	73116-7009	COLONIAL HEIGHTS ADD	013	000	COLONIAL HEIGHTS ADD 013 000 LOTS 1 THRU 3 PLUS 20FT OF VACATED ALLEY ADJ ON W PLUS S33FT OF VACATED 76TH STREET ADJ SD PROPERTY ON N	7615 N CLASSEN BLVD OKLAHOMA CITY

Oklahoma County Assessor's
300ft Radius Report
7/18/2022

R073698400	CITY OF NICHOLS HILLS		6407 AVONDALE DR		NICHOLS HILLS	OK	73116-6431	COLONIAL HEIGHTS ADD	013	000	COLONIAL HEIGHTS ADD 013 000 LOTS 13 THRU 35 PLUS S33FT OF VACATED 76TH STREET ADJ LOTS 25 THRU 35 ON N & THAT PORTION OF WLY HALF OF VACATED ALLEY EXTENDING NLY & SLY ADJ TO E LINE LOT 35	1009 NW 75TH ST OKLAHOMA CITY
R216091320	BURLINGTON CROSSING LLC		9120 N KELLEY AVE STE 100		OKLAHOMA CITY	OK	73131-2440	WILSHIRE POINT	005	007	WILSHIRE POINT BLK 005 LOT 007	7600 N CLASSEN BLVD OKLAHOMA CITY
R169792930	WILSHIRE VILLAGE LLC	C/O S N SCOTT SAMARA	7220 N COUNTRY CLUB DR		OKLAHOMA CITY	OK	73116-4314	UNPLTD PT SEC 05 12N 3W	000	000	UNPLTD PT SEC 05 12N 3W 000 000 PT NE4 SEC 5 12N 3W BEG INTERSECTION OF E LINE WESTERN AVE & N LINE LARCHMONT LN IF EXTENDED TH SELY 327.7FT E237.9FT N299.94FT W372.26FT TO BEG	7632 N WESTERN AVE NICHOLS HILLS
R073699100	CITY OF NICHOLS HILLS		6407 AVONDALE DR		NICHOLS HILLS	OK	73116-6431	COLONIAL HEIGHTS ADD	000	000	COLONIAL HEIGHTS ADD 000 000 ALL OF LOTS 1 THRU 10 BLK 14 PLUS VAC N33FT OF 76TH ST ADJ TO LOT 9 ON S & LOTS 1 THRU 4 BLK 15 & THAT PT OF UNNAMED ST BEG AT SE/C OF LOT 1 TH E50FT N300FT TO NW/C OF LOT	7701 N CLASSEN BLVD OKLAHOMA CITY
R169793005	TG NHOB LLC		PO BOX 4088		EDMOND	OK	73083-4088	UNPLTD PT SEC 05 12N 3W	00F	000	UNPLTD PT SEC 05 12N 3W 00F 000 PT NE4 NE4 SEC 5 12N 3W BEG 33FT S & 33FT W NE/C SD SEC 5 TH W440.31FT SELY 333.10FT E386.63FT TO A POINT 33FT W OF E LINE SD SEC 5 N329.15FT TO BEG CONT 3.11ACRS MORE	1000 W WILSHIRE BLVD, Unit 121A NICHOLS HILLS

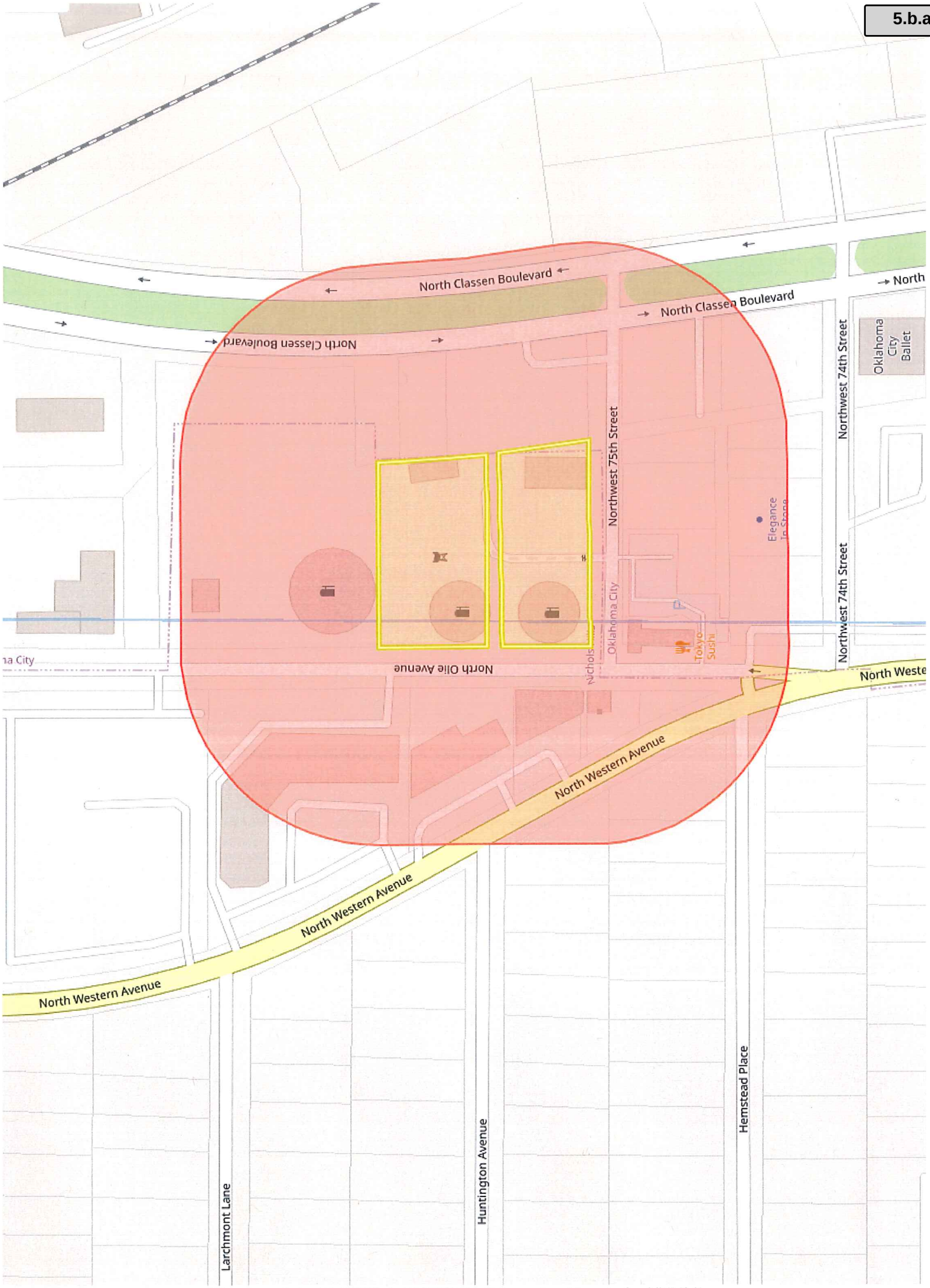

Attachment: PC-2022-03 Packet (5952 : AT&T - Special Permit Application)

February 24, 2022

Hazel Mauro
Nexius Solutions, INC
1025 South Beltline Rd.,
Coppell, TX 75019
(913) 710-3999

B+T Group
1717 S. Boulder, Suite 300
Tulsa, OK 74119
(918) 587-4630
towersupport@btgrp.com

Subject:	**Appurtenance Mount Analysis Report**	
Carrier Designation:	**Site Number:** **Site Name:**	10000548 Nichols Hills
Engineering Firm Designation:	**B+T Group Project Number:**	160843.001.01
Site Data:	**1009 Northwest 75th, Nichols Hills, OK, 73116, Oklahoma County** **Latitude *35.54928*°, Longitude -97.52920°** **Water Tank** **Catwalk Mount**	

Dear Ms. Mauro,

B+T Group is pleased to submit this **"Appurtenance Mount Analysis Report"** to determine the structural integrity of the antenna mount on the above-mentioned structure.

The purpose of the analysis is to determine acceptability of the mount's stress level. Based on our analysis we have determined the stress level for the mount under the following load case to be:

Existing + Proposed Equipment Note: See Table 1 for the final loading configuration	**Sufficient Capacity** **(Passing at 62.2%)**

This analysis has been performed in accordance with the ANSI/TIA-222-H Standard.

All the equipment proposed in this report shall be installed in accordance with the drawings for the determined available structural capacity to be effective.

We at *B+T Group* appreciate the opportunity of providing our continuing professional services to you and *Nexius Solutions, INC.* If you have any questions or need further assistance on this or any other projects, please give us a call.

Mount structural analysis prepared by: Erika Ruiz

Respectfully submitted by: B&T Engineering, Inc.
COA: CA 3590 (PE) Expires: 06/30/2022

LICENSED PROFESSIONAL ENGINEER
BRAD ROBERT MILANOWSKI
17379
OKLAHOMA

2/24/22

Brad R. Milanowski, P.E.

Attachment: PC-2022-03 Packet (5952 : AT&T - Special Permit Application)

TABLE OF CONTENTS

1) INTRODUCTION

2) ANALYSIS CRITERIA
Table 1 - Proposed and Existing Equipment Information
Table 2 - Documents Provided

3) ANALYSIS PROCEDURE
3.1) Analysis Method
3.2) Assumptions

4) ANALYSIS RESULTS
Table 3 – Mount Component Stresses vs. Capacity

5) RECOMMENDATIONS

6) APPENDIX A
RISA-3D Output

7) APPENDIX B
Additional Calculations

Attachment: PC-2022-03 Packet (5952 : AT&T - Special Permit Application)

1) INTRODUCTION

The appurtenance mount consists of Catwalk Mounts at 126 ft., attached to water tank at 1009 Northwest 75th, Nichols Hills, OK, 73116, Oklahoma County. The proposed antenna loading information was obtained from Nexius Solutions, INC. All information provided to B+T Group was assumed accurate and complete.

2) ANALYSIS CRITERIA

The structural analysis was performed for this mount in accordance with the ANSI/TIA-222-H-2017 Structural Standard for Antenna Supporting Structures and Antennas and Small Wind Turbine Support Structures using a 3-second gust wind speed of 109 mph with no ice and 40 mph with 1.5 inch escalated ice thickness. Exposure Category C, Topographic Category 1 and Risk Category II were used in this analysis. In addition, the Catwalk mount has been analyzed for various live loading conditions consisting of a 0-lb man live load applied individually at the midpoint and cantilevered ends of horizontal members as well as a 0-pound man live load applied individually at mount pipe locations using a 3-second gust of 30mph. The mount was analyzed under 30º increments in the wind direction. The analyzed loading is detailed in Table 1.

Table 1 – Proposed and Existing Equipment Information

Loading	RAD Center Elev. (ft.)	Position	Qty.	Manufacturer	Model / Type	Note
Proposed	129	3	3	Ericsson	AIR6449 B77D	1
		3	3	Ericsson	AIR6419 B77G	
		4	3	CCI	TPA65R-BU8D	
		4	3	Ericsson	4449 B5/B12	2
		-	3	Raycap	DC2-48-60-0-9E	3
		-	1	Raycap	FC12-PC6-10E	
Existing	129	1,2	6	Kathrein	80010799	4
		-	3	Ericsson	4478 B14	5
		-	3	Ericsson	RRUS-32 B2	
		2	3	Ericsson	RRUS-32 B66A	
		4	3	Ericsson	RRUS-32 B30	
		-	3	Raycap	FC12-PC6-10E	6
		-	9	Raycap	DC2-48-60-0-9E	

Note:
(1) Proposed Antenna to be installed on the existing Mount Pipe.
(2) Proposed Equipment to be installed side by side with RRUS Support, directly behind the Antenna.
(3) Proposed Equipment installed on the railing.
(4) Existing Antenna to be installed on the existing Mount Pipe.
(5) Existing Equipment to be installed side by side with RRUS Support, directly behind the Antenna.
(6) Existing Equipment installed on the railing.

Table 2 - Documents Provided

Documents	Remarks	Reference	Source
RFDS	Existing Loading Proposed Loading	Date:12/27/2021	Nexius Solutions, INC.
CD's by Nexius		Date: 01/20/2022	
Mount Mapping	B+T Group	Date: 07/22/2016	On File
Mount Modification		Date: 11/11/2016	

Attachment: PC-2022-03 Packet (5952 : AT&T - Special Permit Application)

3) ANALYSIS PROCEDURE

3.1) Analysis Method

RISA-3D (Version 19.0.4), a commercially available analysis software package, was used to create a three-dimensional model of the mount and calculate member stresses and deflections for various loading cases. Selected output from the analysis is included in Appendix A.

3.2) Assumptions

1. The mount was built in accordance with the manufacturer's specifications.
2. The mount has been maintained in accordance with the manufacturer's specifications and is free of damage.
3. The configuration of antennas and other appurtenances are as specified in Table 1.
4. All mount components have been assumed to be in sufficient condition to carry their full design capacity for the analysis.
5. Mount areas and weights are determined from field measurements, standard material properties, and/or manufacturer product data.
   The following assumptions have been included in the analysis of the mount

Component	Section	Length	Note
Proposed Mount Pipes for new Antenna	2" Std. Pipe	10'-0"	Position 3, All Sectors
Proposed Mount Pipes	2" Std. Pipe	4'-0"	-

6. Serviceability with respect to antenna twist, tilt, roll or lateral translation is not checked and is left to the carrier or tower owner to ensure conformance.
7. All prior structural modifications, if any are assumed to be correctly installed and fully effective.
8. All member connections are assumed to have been designed to meet or exceed the load carrying capacity of the connected member unless otherwise specified in this report.
9. The following material grades were assumed (Unless Noted Otherwise):
   a) Connection Bolts : ASTM A325
   b) Steel Pipe : ASTM A53 (GR. 35)
   c) HSS (Round) : ASTM 500 (GR. B-42)
   d) HSS (Rectangular) : ASTM 500 (GR. B-46)
   e) Channel : ASTM A36 (GR. 36)
   f) Steel Solid Rod : ASTM A36 (GR. 36)
   g) Steel Plate : ASTM A36 (GR. 36)
   h) Steel Angle : ASTM A36 (GR. 36)
   i) UNISTRUT : ASTM A570 (GR. 33)

This analysis may be affected if any assumptions are not valid or have been made in error. B+T Group should be notified to determine the effect on the structural integrity of the antenna mounting system.

Attachment: PC-2022-03 Packet (5952 : AT&T - Special Permit Application)

4) ANALYSIS RESULTS

Table 3 – Mount Component Stresses vs. Capacity

Notes	Component	Elevation (ft.)	% Capacity	Pass / Fail
-	Top Rails	126	56.7	Pass
-	Mid Rails	126	31.7	Pass
-	Vertical Angles	126	62.2	Pass
-	Connection Plates	126	40.5	Pass
-	Mount Pipes	126	53.0	Pass
-	Unistruts	126	50.5	Pass
-	Connection Bolts	-	53.4	Pass

5) RECOMMENDATIONS

The mount has sufficient capacity to carry the existing and proposed loads and is in compliance with the ANSI/TIA-222-H standard for the proposed and existing loading. (Refer to the RISA output for the specific members).

Attachment: PC-2022-03 Packet (5952 : AT&T - Special Permit Application)

APPENDIX A

(RISA-3D Output)

Attachment: PC-2022-03 Packet (5952 : AT&T - Special Permit Application)

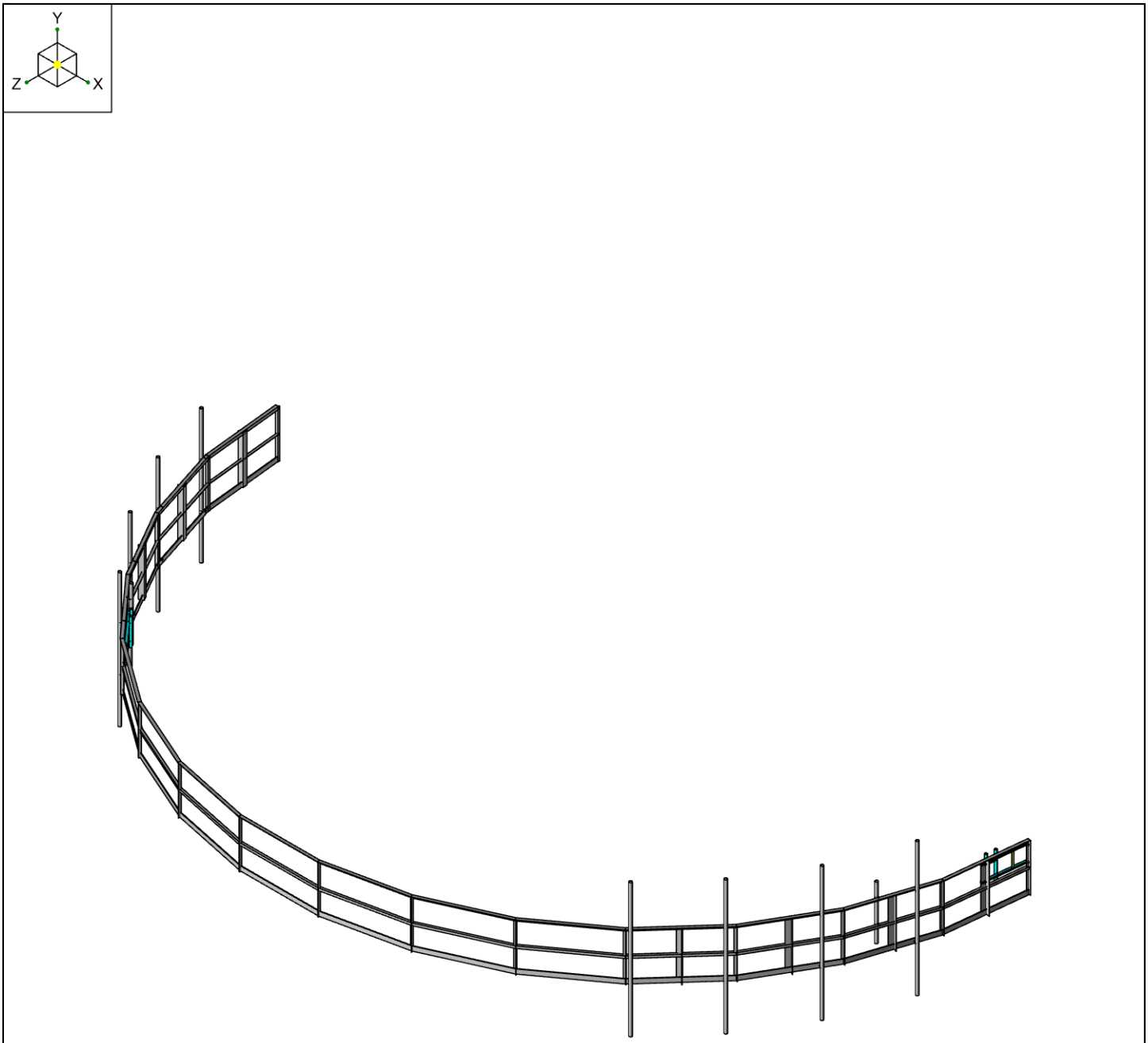

Envelope Only Solution

B+T Group	10000548 - Nichols Hills	SK-1
MP		Feb 23, 2022
160843.001.01		160843_001_01_Nichols Hills_OK…

Attachment: PC-2022-03 Packet (5952 : AT&T - Special Permit Application)

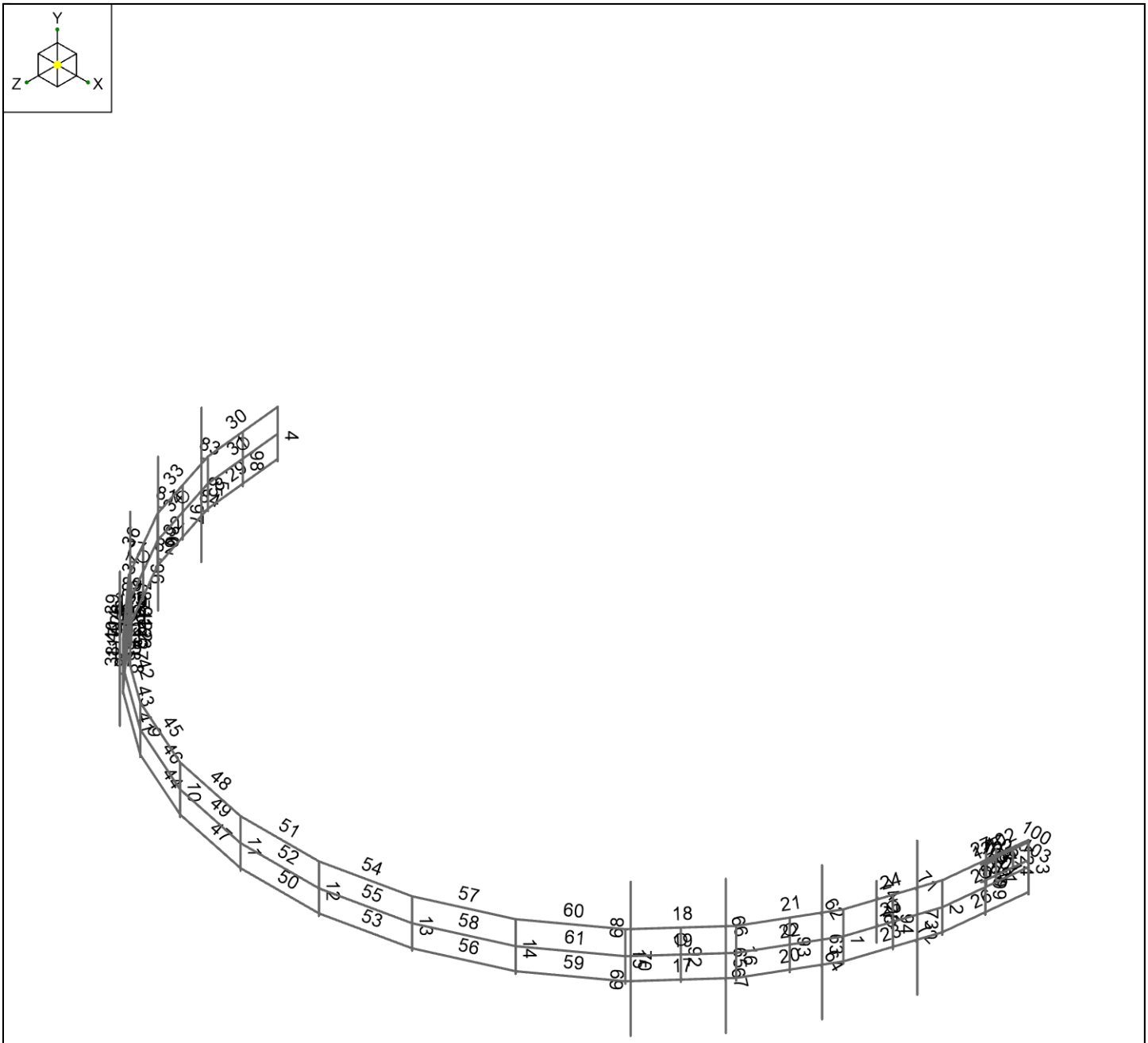

Envelope Only Solution

B+T Group	10000548 - Nichols Hills	SK-2
MP		Feb 23, 2022
160843.001.01		160843_001_01_Nichols Hills_OK…

Attachment: PC-2022-03 Packet (5952 : AT&T - Special Permit Application)

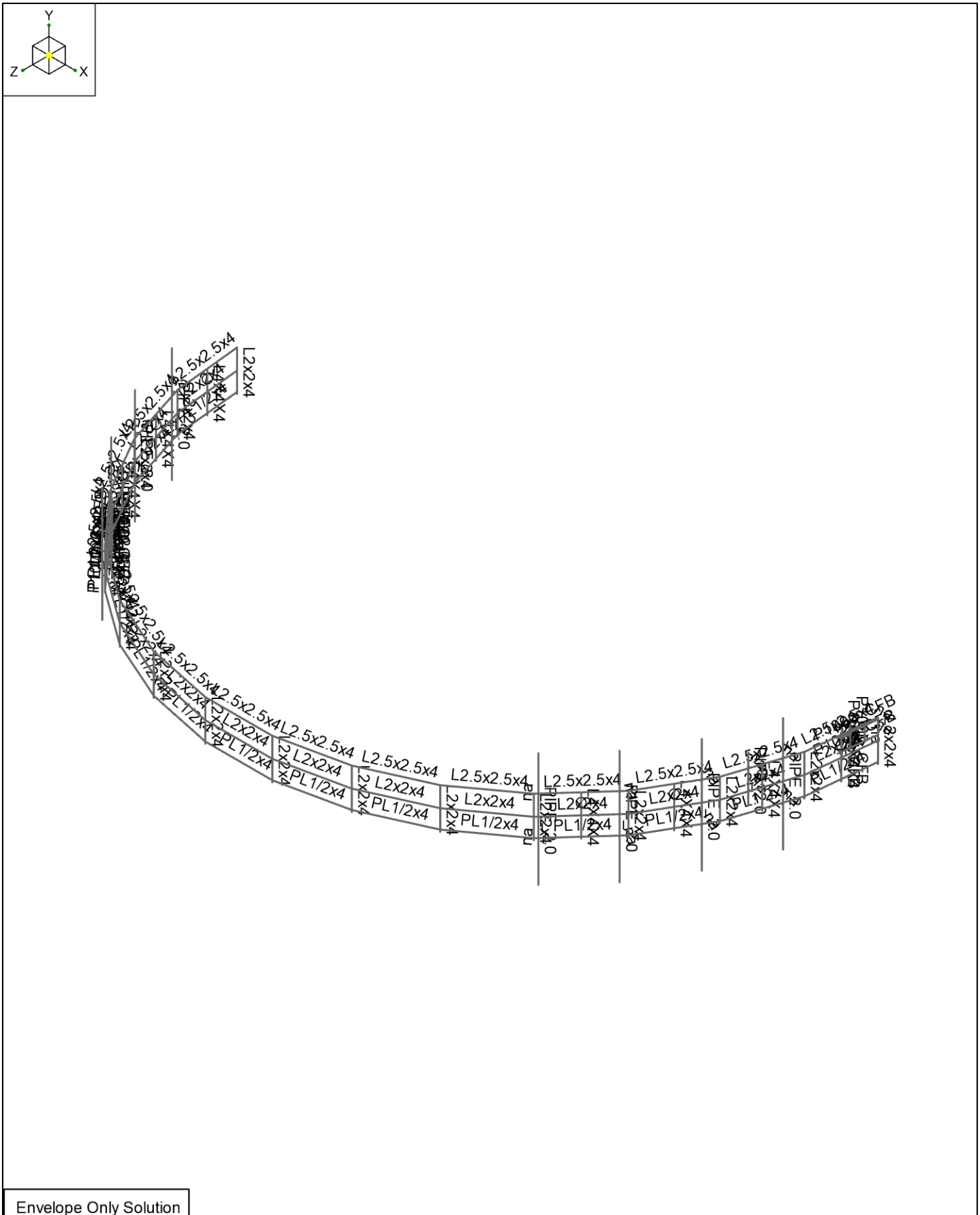

Envelope Only Solution

B+T Group	10000548 - Nichols Hills	SK-3
MP		Feb 23, 2022
160843.001.01		160843_001_01_Nichols Hills_OK…

Attachment: PC-2022-03 Packet (5952 : AT&T - Special Permit Application)

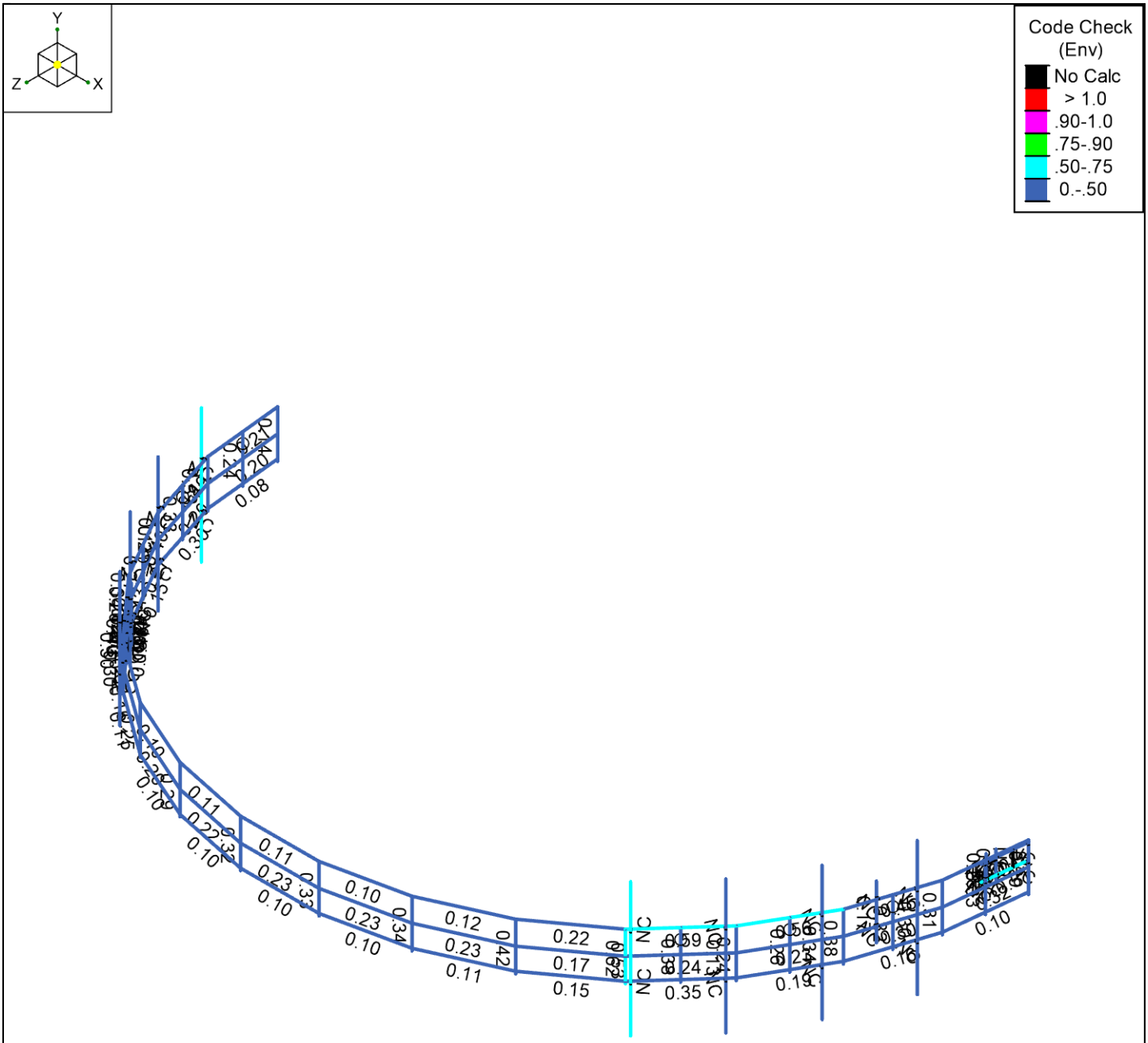

Member Code Checks Displayed (Enveloped)
Envelope Only Solution

B+T Group	10000548 - Nichols Hills	SK-4
MP		Feb 23, 2022
160843.001.01		160843_001_01_Nichols Hills_OK…

Attachment: PC-2022-03 Packet (5952 : AT&T - Special Permit Application)

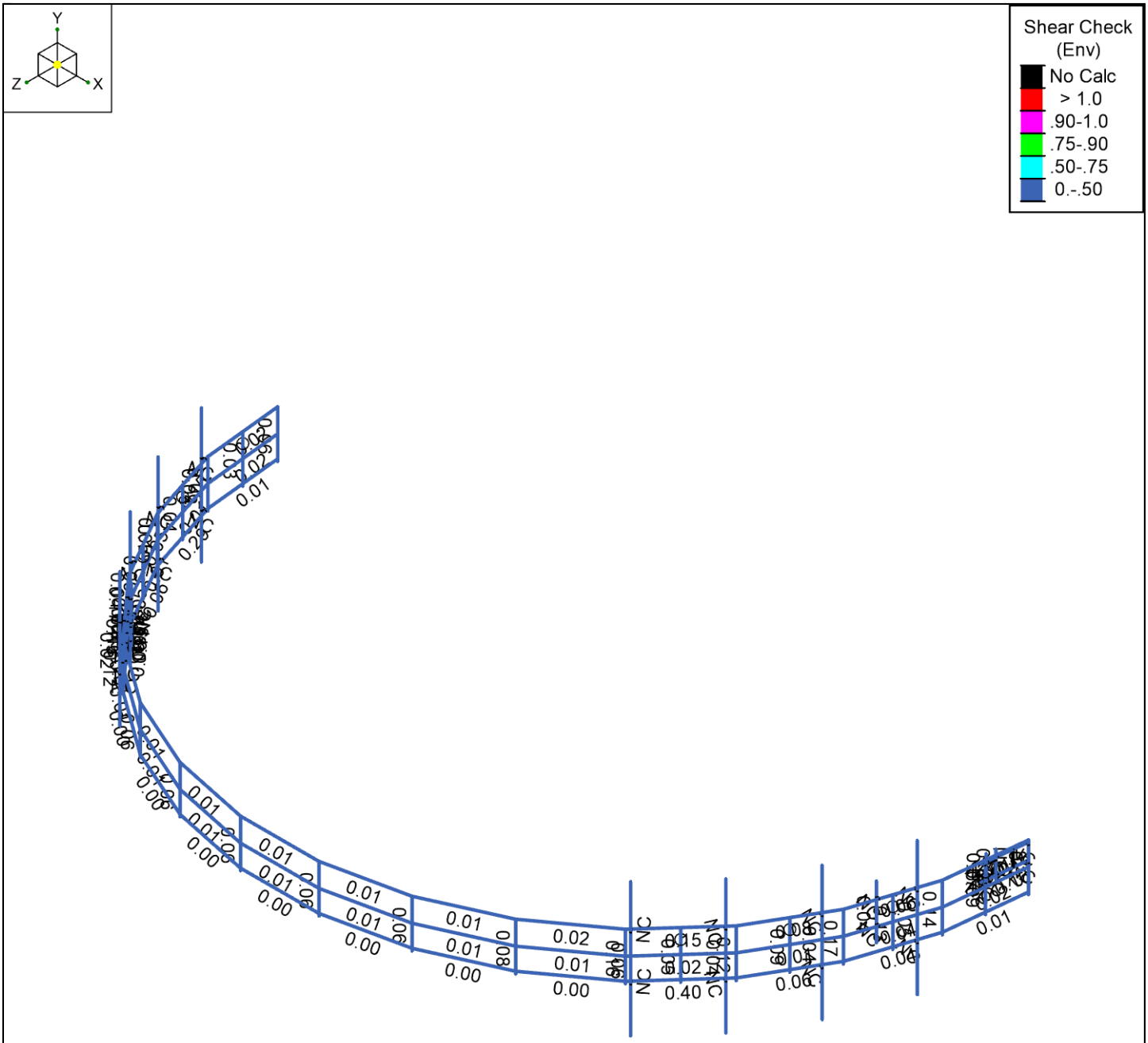

Member Shear Checks Displayed (Enveloped)
Envelope Only Solution

B+T Group	10000548 - Nichols Hills	SK-5
MP		Feb 23, 2022
160843.001.01		160843_001_01_Nichols Hills_OK…

Attachment: PC-2022-03 Packet (5952 : AT&T - Special Permit Application)

Node Coordinates

	Label	X [ft]	Y [ft]	Z [ft]	Detach From Diaphragm
1	1	0	0	0	
2	2	25.667524	-0.166667	11.427918	
3	3	27.482625	-0.166667	5.841612	
4	4	28.096603	-0.166667	0	
5	5	-28.096603	-0.166667	0	
6	6	-27.482625	-0.166667	5.841612	
7	7	-25.667524	-0.166667	11.427918	
8	8	-22.730629	-0.166667	16.514769	
9	9	-18.800297	-0.166667	20.879845	
10	10	-14.048301	-0.166667	24.332372	
11	11	-8.682328	-0.166667	26.721457	
12	12	-2.936895	-0.166667	27.942687	
13	13	2.936895	-0.166667	27.942687	
14	14	8.682328	-0.166667	26.721457	
15	15	14.048301	-0.166667	24.332372	
16	16	18.800297	-0.166667	20.879845	
17	17	22.730629	-0.166667	16.514769	
18	18	22.730629	0	16.514769	
19	19	22.730629	3.375	16.514769	
20	20	22.730629	1.625	16.514769	
21	21	25.667524	0	11.427918	
22	22	25.667524	3.375	11.427918	
23	23	25.667524	1.625	11.427918	
24	24	27.482625	0	5.841612	
25	25	28.096603	0	0	
26	26	27.482625	3.375	5.841612	
27	27	28.096603	3.375	0	
28	28	27.482625	1.625	5.841612	
29	29	28.096603	1.625	0	
30	30	-28.096603	0	0	
31	31	-28.096603	3.375	0	
32	32	-28.096603	1.625	0	
33	33	-27.482625	0	5.841612	
34	34	-27.482625	3.375	5.841612	
35	35	-27.482625	1.625	5.841612	
36	36	-25.667524	0	11.427918	
37	37	-25.667524	3.375	11.427918	
38	38	-25.667524	1.625	11.427918	
39	39	-22.730629	0	16.514769	
40	40	-22.730629	3.375	16.514769	
41	41	-22.730629	1.625	16.514769	
42	42	-18.800297	0	20.879845	
43	43	-18.800297	3.375	20.879845	
44	44	-18.800297	1.625	20.879845	
45	45	-14.048301	0	24.332372	
46	46	-14.048301	3.375	24.332372	
47	47	-14.048301	1.625	24.332372	
48	48	-8.682328	0	26.721457	
49	49	-8.682328	3.375	26.721457	
50	50	-8.682328	1.625	26.721457	
51	51	-2.936895	0	27.942687	
52	52	-2.936895	3.375	27.942687	
53	53	-2.936895	1.625	27.942687	
54	54	2.936895	0	27.942687	
55	55	2.936895	3.375	27.942687	

Attachment: PC-2022-03 Packet (5952 : AT&T - Special Permit Application)

Node Coordinates (Continued)

	Label	X [ft]	Y [ft]	Z [ft]	Detach From Diaphragm
56	56	2.936895	1.625	27.942687	
57	57	8.682328	0	26.721457	
58	58	8.682328	3.375	26.721457	
59	59	8.682328	1.625	26.721457	
60	60	14.048301	0	24.332372	
61	61	18.800297	0	20.879845	
62	62	14.048301	3.375	24.332372	
63	63	18.800297	3.375	20.879845	
64	64	14.048301	1.625	24.332372	
65	65	18.800297	1.625	20.879845	
66	66	0	3.375	0	
67	67	0	-0.166667	0	
68	68	25.042524	3.375	12.51045	
69	69	25.266169	3.375	12.622176	
70	70	25.266169	6.625	12.622176	
71	71	25.266169	-3.375	12.622176	
72	72	25.266169	0	12.622176	
73	73	25.042524	0	12.51045	
74	74	22.539474	6.625	17.099369	
75	75	22.539474	-3.375	17.099369	
76	76	22.539474	3.375	17.099369	
77	77	22.340303	3.375	16.94827	
78	78	22.539474	0	17.099369	
79	79	22.340303	0	16.94827	
80	80	19.163836	3.375	20.848049	
81	81	18.99465	3.375	20.663994	
82	82	19.163836	0	20.848049	
83	83	18.99465	0	20.663994	
84	84	19.163836	6.625	20.848049	
85	85	19.163836	-3.375	20.848049	
86	86	27.221975	3.375	7.451936	
87	87	26.980846	3.375	7.385928	
88	88	27.221975	0	7.451936	
89	89	26.980846	0	7.385928	
90	90	27.221975	6.625	7.451936	
91	91	27.221975	-3.375	7.451936	
92	92	26.311309	3.375	9.44655	
93	93	26.075889	3.375	9.362423	
94	94	26.311309	1.625	9.44655	
95	95	26.075889	1.625	9.362423	
96	96	26.075889	4.375	9.362423	
97	97	26.075889	0.375	9.362423	
98	98	-23.355629	3.375	15.432237	
99	99	-23.56421	3.375	15.570057	
100	100	-23.56421	6.625	15.570057	
101	101	-23.56421	-3.375	15.570057	
102	102	-23.56421	0	15.570057	
103	103	-23.355629	0	15.432237	
104	104	-26.078225	6.625	10.970072	
105	105	-26.078225	-3.375	10.970072	
106	106	-26.078225	3.375	10.970072	
107	107	-25.847784	3.375	10.873135	
108	108	-26.078225	0	10.970072	
109	109	-25.847784	0	10.873135	
110	110	-27.636858	3.375	6.172344	

Attachment: PC-2022-03 Packet (5952 : AT&T - Special Permit Application)

Node Coordinates (Continued)

	Label	X [ft]	Y [ft]	Z [ft]	Detach From Diaphragm
111	111	-27.392869	3.375	6.117852	
112	112	-27.636858	0	6.172344	
113	113	-27.392869	0	6.117852	
114	114	-27.636858	6.625	6.172344	
115	115	-27.636858	-3.375	6.172344	
116	116	-20.064553	3.375	19.848954	
117	117	-19.886824	3.375	19.673134	
118	118	-20.064553	0	19.848954	
119	119	-19.886824	0	19.673134	
120	120	-20.064553	6.625	19.848954	
121	121	-20.064553	-3.375	19.848954	
122	122	-21.336607	3.375	18.062987	
123	123	-21.146041	3.375	17.901171	
124	124	-21.336607	1.625	18.062987	
125	125	-21.146041	1.625	17.901171	
126	126	-21.146041	4.375	17.901171	
127	127	-21.146041	0.375	17.901171	
128	128	20.765463	3.375	18.697307	
129	129	20.765463	-0.166667	18.697307	
130	130	24.199077	3.375	13.971343	
131	131	24.199077	-0.166667	13.971343	
132	132	26.575074	3.375	8.634765	
133	133	26.575074	-0.166667	8.634765	
134	134	-20.765463	3.375	18.697307	
135	135	-20.765463	-0.166667	18.697307	
136	136	-24.199077	3.375	13.971343	
137	137	-24.199077	-0.166667	13.971343	
138	138	-26.575074	3.375	8.634765	
139	139	-26.575074	-0.166667	8.634765	
140	140	-27.789614	3.375	2.920806	
141	141	-27.789614	-0.166667	2.920806	
142	142	27.789614	3.375	2.920806	
143	143	27.789614	-0.166667	2.920806	
144	144	28.096603	3.083333	0	
145	145	27.929936	3.083333	0	
146	146	27.789614	3.083333	2.920806	
147	147	27.62386	3.083333	2.903385	
148	148	27.606534	3.083333	3.067737	
149	149	27.947262	3.083333	-0.164353	
150	150	28.096603	1.916667	0	
151	151	27.929936	1.916667	0	
152	152	27.789614	1.916667	2.920806	
153	153	27.62386	1.916667	2.903385	
154	154	27.606534	1.916667	3.067737	
155	155	27.947262	1.916667	-0.164353	
156	156	27.724479	3.083333	1.948937	
157	157	27.599649	3.083333	1.942413	
158	158	27.724479	1.916667	1.948937	
159	159	27.599649	1.916667	1.942413	
160	160	27.654586	3.083333	2.61193	
161	161	27.529756	3.083333	2.605406	
162	162	27.654586	1.916667	2.61193	
163	163	27.529756	1.916667	2.605406	
164	164	27.529756	3.5	2.605406	
165	165	27.529756	1.5	2.605406	

Attachment: PC-2022-03 Packet (5952 : AT&T - Special Permit Application)

Node Coordinates (Continued)

	Label	X [ft]	Y [ft]	Z [ft]	Detach From Diaphragm
166	166	27.599649	3.5	1.942413	
167	167	27.599649	1.5	1.942413	
168	168	20.765463	0	18.697307	
169	169	20.765463	1.625	18.697307	
170	170	24.199077	0	13.971343	
171	171	24.199077	1.625	13.971343	
172	172	26.575074	0	8.634765	
173	173	26.575074	1.625	8.634765	
174	174	27.789614	0	2.920806	
175	175	27.789614	1.625	2.920806	
176	176	-27.789614	0	2.920806	
177	177	-27.789614	1.625	2.920806	
178	178	-26.575074	0	8.634765	
179	179	-26.575074	1.625	8.634765	
180	180	-24.199077	0	13.971343	
181	181	-24.199077	1.625	13.971343	
182	182	-20.765463	0	18.697307	
183	183	-20.765463	1.625	18.697307	
184	184	-18.800297	3.083333	20.879845	
185	185	-18.688775	3.083333	20.755988	
186	186	-20.765463	3.083333	18.697307	
187	187	-20.641606	3.083333	18.585785	
188	188	-20.75215	3.083333	18.462936	
189	189	-18.578231	3.083333	20.878837	
190	190	-18.800297	1.916667	20.879845	
191	191	-18.688775	1.916667	20.755988	
192	192	-20.765463	1.916667	18.697307	
193	193	-20.641606	1.916667	18.585785	
194	194	-20.75215	1.916667	18.462936	
195	195	-18.578231	1.916667	20.878837	
196	196	-19.99964	3.083333	19.299209	
197	197	-19.911264	3.083333	19.210808	
198	198	-19.99964	1.916667	19.299209	
199	199	-19.911264	1.916667	19.210808	
200	200	-20.445572	3.083333	18.80364	
201	201	-20.357196	3.083333	18.715239	
202	202	-20.445572	1.916667	18.80364	
203	203	-20.357196	1.916667	18.715239	
204	204	-20.357196	3.5	18.715239	
205	205	-20.357196	1.5	18.715239	
206	206	-19.911264	3.5	19.210808	
207	207	-19.911264	1.5	19.210808	
208	208	27.833686	3.083333	0.913011	
209	209	27.833686	1.916667	0.913011	
210	210	27.599649	2.833333	1.942413	
211	211	27.529756	2.833333	2.605406	
212	212	-20.357196	2.833333	18.715239	
213	213	-19.911264	2.833333	19.210808	
214	214	-19.302871	3.083333	20.073537	
215	215	-19.302871	1.916667	20.073537	

Node Boundary Conditions

	Node Label	X [k/in]	Y [k/in]	Z [k/in]	X Rot [k-ft/rad]	Y Rot [k-ft/rad]	Z Rot [k-ft/rad]
1	4	Reaction	Reaction	Reaction	Reaction	Reaction	Reaction
2	143	Reaction	Reaction	Reaction	Reaction	Reaction	Reaction

Attachment: PC-2022-03 Packet (5952 : AT&T - Special Permit Application)

Node Boundary Conditions (Continued)

	Node Label	X [k/in]	Y [k/in]	Z [k/in]	X Rot [k-ft/rad]	Y Rot [k-ft/rad]	Z Rot [k-ft/rad]
3	3	Reaction	Reaction	Reaction	Reaction	Reaction	Reaction
4	133	Reaction	Reaction	Reaction	Reaction	Reaction	Reaction
5	2	Reaction	Reaction	Reaction	Reaction	Reaction	Reaction
6	131	Reaction	Reaction	Reaction	Reaction	Reaction	Reaction
7	17	Reaction	Reaction	Reaction	Reaction	Reaction	Reaction
8	129	Reaction	Reaction	Reaction	Reaction	Reaction	Reaction
9	16	Reaction	Reaction	Reaction	Reaction	Reaction	Reaction
10	15	Reaction	Reaction	Reaction	Reaction	Reaction	Reaction
11	14	Reaction	Reaction	Reaction	Reaction	Reaction	Reaction
12	13	Reaction	Reaction	Reaction	Reaction	Reaction	Reaction
13	12	Reaction	Reaction	Reaction	Reaction	Reaction	Reaction
14	11	Reaction	Reaction	Reaction	Reaction	Reaction	Reaction
15	10	Reaction	Reaction	Reaction	Reaction	Reaction	Reaction
16	9	Reaction	Reaction	Reaction	Reaction	Reaction	Reaction
17	8	Reaction	Reaction	Reaction	Reaction	Reaction	Reaction
18	137	Reaction	Reaction	Reaction	Reaction	Reaction	Reaction
19	7	Reaction	Reaction	Reaction	Reaction	Reaction	Reaction
20	6	Reaction	Reaction	Reaction	Reaction	Reaction	Reaction
21	5	Reaction	Reaction	Reaction	Reaction	Reaction	Reaction
22	141	Reaction	Reaction	Reaction	Reaction	Reaction	Reaction
23	139	Reaction	Reaction	Reaction	Reaction	Reaction	Reaction
24	135	Reaction	Reaction	Reaction	Reaction	Reaction	Reaction

Hot Rolled Steel Properties

	Label	E [ksi]	G [ksi]	Nu	Therm. Coeff. [1e⁵°F⁻¹]	Density [k/ft³]	Yield [ksi]	Ry	Fu [ksi]	Rt
1	A992	29000	11154	0.3	0.65	0.49	50	1.1	65	1.1
2	A36 Gr.36	29000	11154	0.3	0.65	0.49	36	1.5	58	1.2
3	A572 Gr.50	29000	11154	0.3	0.65	0.49	50	1.1	65	1.1
4	A500 Gr.B RND	29000	11154	0.3	0.65	0.527	42	1.4	58	1.3
5	A500 Gr.B Rect	29000	11154	0.3	0.65	0.527	46	1.4	58	1.3
6	A53 Gr.B	29000	11154	0.3	0.65	0.49	35	1.6	60	1.2
7	A1085	29000	11154	0.3	0.65	0.49	50	1.4	65	1.3
8	A500 Gr.C RND	29000	11154	0.3	0.65	0.527	46	1.4	62	1.3
9	A500 Gr.C RECT	29000	11154	0.3	0.65	0.527	50	1.4	62	1.3
10	A913 Gr.65	29000	11154	0.3	0.65	0.49	65	1.1	80	1.1

Cold Formed Steel Properties

	Label	E [ksi]	G [ksi]	Nu	Therm. Coeff. [1e⁵°F⁻¹]	Density [k/ft³]	Yield [ksi]	Fu [ksi]
1	A653 SS Gr33	29500	11346	0.3	0.65	0.49	33	45
2	A653 SS Gr50/1	29500	11346	0.3	0.65	0.49	50	65

Hot Rolled Steel Section Sets

	Label	Shape	Type	Design List	Material	Design Rule	Area [in²]	Iyy [in⁴]	Izz [in⁴]	J [in⁴]
1	F1-CA1	L2.5x2.5x4	Beam	Single Angle	A36 Gr.36	Typical	1.19	0.692	0.692	0.026
2	F1-CA2	L2x2x4	Beam	Single Angle	A36 Gr.36	Typical	0.944	0.346	0.346	0.021
3	F1-V1	L2x2x4	Column	Single Angle	A36 Gr.36	Typical	0.944	0.346	0.346	0.021
4	F1-V2-Mod	L4X4X4	Column	Single Angle	A36 Gr.36	Typical	1.93	3	3	0.044
5	F1-CP1	PL1/2x4	Beam	RECT	A36 Gr.36	Typical	2	0.042	2.667	0.154
6	MF-P1	PIPE_2.0	Column	Pipe	A53 Gr.B	Typical	1.02	0.627	0.627	1.25

Attachment: PC-2022-03 Packet (5952 : AT&T - Special Permit Application)

Cold Formed Steel Section Sets

	Label	Shape	Type	Design List	Material	Design Rule	Area [in²]	Iyy [in⁴]	Izz [in⁴]	J [in⁴]
1	CF1	P1000_CFB	Beam	CS	A653 SS Gr33	Typical	0.515	0.164	0.221	0.002
2	CF2	P1000_CFB	Column	CS	A653 SS Gr33	Typical	0.515	0.164	0.221	0.002

Member Primary Data

	Label	I Node	J Node	Rotate(deg)	Section/Shape	Type	Design List	Material	Design Rule
1	1	22	2	210	F1-V1	Column	Single Angle	A36 Gr.36	Typical
2	2	26	3	190	F1-V1	Column	Single Angle	A36 Gr.36	Typical
3	3	27	4	180	F1-V1	Column	Single Angle	A36 Gr.36	Typical
4	4	31	5	355	F1-V1	Column	Single Angle	A36 Gr.36	Typical
5	5	34	6	355	F1-V1	Column	Single Angle	A36 Gr.36	Typical
6	6	37	7	340	F1-V1	Column	Single Angle	A36 Gr.36	Typical
7	7	40	8	330	F1-V1	Column	Single Angle	A36 Gr.36	Typical
8	8	43	9	320	F1-V1	Column	Single Angle	A36 Gr.36	Typical
9	9	46	10	300	F1-V1	Column	Single Angle	A36 Gr.36	Typical
10	10	49	11	290	F1-V1	Column	Single Angle	A36 Gr.36	Typical
11	11	52	12	280	F1-V1	Column	Single Angle	A36 Gr.36	Typical
12	12	55	13	270	F1-V1	Column	Single Angle	A36 Gr.36	Typical
13	13	58	14	260	F1-V1	Column	Single Angle	A36 Gr.36	Typical
14	14	62	15	240	F1-V1	Column	Single Angle	A36 Gr.36	Typical
15	15	63	16	230	F1-V1	Column	Single Angle	A36 Gr.36	Typical
16	16	19	17	220	F1-V1	Column	Single Angle	A36 Gr.36	Typical
17	17	61	18		F1-CP1	Beam	RECT	A36 Gr.36	Typical
18	18	63	19	90	F1-CA1	Beam	Single Angle	A36 Gr.36	Typical
19	19	65	20	180	F1-CA2	Beam	Single Angle	A36 Gr.36	Typical
20	20	18	21		F1-CP1	Beam	RECT	A36 Gr.36	Typical
21	21	19	22	90	F1-CA1	Beam	Single Angle	A36 Gr.36	Typical
22	22	20	23	180	F1-CA2	Beam	Single Angle	A36 Gr.36	Typical
23	23	21	24		F1-CP1	Beam	RECT	A36 Gr.36	Typical
24	24	22	26	90	F1-CA1	Beam	Single Angle	A36 Gr.36	Typical
25	25	23	28	180	F1-CA2	Beam	Single Angle	A36 Gr.36	Typical
26	26	24	25		F1-CP1	Beam	RECT	A36 Gr.36	Typical
27	27	26	27	90	F1-CA1	Beam	Single Angle	A36 Gr.36	Typical
28	28	28	29	180	F1-CA2	Beam	Single Angle	A36 Gr.36	Typical
29	29	30	33		F1-CP1	Beam	RECT	A36 Gr.36	Typical
30	30	31	34	90	F1-CA1	Beam	Single Angle	A36 Gr.36	Typical
31	31	32	35	180	F1-CA2	Beam	Single Angle	A36 Gr.36	Typical
32	32	33	36		F1-CP1	Beam	RECT	A36 Gr.36	Typical
33	33	34	37	90	F1-CA1	Beam	Single Angle	A36 Gr.36	Typical
34	34	35	38	180	F1-CA2	Beam	Single Angle	A36 Gr.36	Typical
35	35	36	39		F1-CP1	Beam	RECT	A36 Gr.36	Typical
36	36	37	40	90	F1-CA1	Beam	Single Angle	A36 Gr.36	Typical
37	37	38	41	180	F1-CA2	Beam	Single Angle	A36 Gr.36	Typical
38	38	39	42		F1-CP1	Beam	RECT	A36 Gr.36	Typical
39	39	40	43	90	F1-CA1	Beam	Single Angle	A36 Gr.36	Typical
40	40	41	44	180	F1-CA2	Beam	Single Angle	A36 Gr.36	Typical
41	41	42	45		F1-CP1	Beam	RECT	A36 Gr.36	Typical
42	42	43	46	90	F1-CA1	Beam	Single Angle	A36 Gr.36	Typical
43	43	44	47	180	F1-CA2	Beam	Single Angle	A36 Gr.36	Typical
44	44	45	48		F1-CP1	Beam	RECT	A36 Gr.36	Typical
45	45	46	49	90	F1-CA1	Beam	Single Angle	A36 Gr.36	Typical
46	46	47	50	180	F1-CA2	Beam	Single Angle	A36 Gr.36	Typical
47	47	48	51		F1-CP1	Beam	RECT	A36 Gr.36	Typical
48	48	49	52	90	F1-CA1	Beam	Single Angle	A36 Gr.36	Typical
49	49	50	53	180	F1-CA2	Beam	Single Angle	A36 Gr.36	Typical

Attachment: PC-2022-03 Packet (5952 : AT&T - Special Permit Application)

Member Primary Data (Continued)

	Label	I Node	J Node	Rotate(deg)	Section/Shape	Type	Design List	Material	Design Rule
50	50	51	54		F1-CP1	Beam	RECT	A36 Gr.36	Typical
51	51	52	55	90	F1-CA1	Beam	Single Angle	A36 Gr.36	Typical
52	52	53	56	180	F1-CA2	Beam	Single Angle	A36 Gr.36	Typical
53	53	54	57		F1-CP1	Beam	RECT	A36 Gr.36	Typical
54	54	55	58	90	F1-CA1	Beam	Single Angle	A36 Gr.36	Typical
55	55	56	59	180	F1-CA2	Beam	Single Angle	A36 Gr.36	Typical
56	56	57	60		F1-CP1	Beam	RECT	A36 Gr.36	Typical
57	57	58	62	90	F1-CA1	Beam	Single Angle	A36 Gr.36	Typical
58	58	59	64	180	F1-CA2	Beam	Single Angle	A36 Gr.36	Typical
59	59	60	61		F1-CP1	Beam	RECT	A36 Gr.36	Typical
60	60	62	63	90	F1-CA1	Beam	Single Angle	A36 Gr.36	Typical
61	61	64	65	180	F1-CA2	Beam	Single Angle	A36 Gr.36	Typical
62	62	69	68		RIGID	None	None	RIGID	Typical
63	63	70	71		MF-P1	Column	Pipe	A53 Gr.B	Typical
64	64	72	73		RIGID	None	None	RIGID	Typical
65	65	74	75		MF-P1	Column	Pipe	A53 Gr.B	Typical
66	66	76	77		RIGID	None	None	RIGID	Typical
67	67	78	79		RIGID	None	None	RIGID	Typical
68	68	80	81		RIGID	None	None	RIGID	Typical
69	69	82	83		RIGID	None	None	RIGID	Typical
70	70	84	85		MF-P1	Column	Pipe	A53 Gr.B	Typical
71	71	86	87		RIGID	None	None	RIGID	Typical
72	72	88	89		RIGID	None	None	RIGID	Typical
73	73	90	91		MF-P1	Column	Pipe	A53 Gr.B	Typical
74	74	92	93		RIGID	None	None	RIGID	Typical
75	75	94	95		RIGID	None	None	RIGID	Typical
76	76	96	97		MF-P1	Column	Pipe	A53 Gr.B	Typical
77	77	99	98		RIGID	None	None	RIGID	Typical
78	78	100	101		MF-P1	Column	Pipe	A53 Gr.B	Typical
79	79	102	103		RIGID	None	None	RIGID	Typical
80	80	104	105		MF-P1	Column	Pipe	A53 Gr.B	Typical
81	81	106	107		RIGID	None	None	RIGID	Typical
82	82	108	109		RIGID	None	None	RIGID	Typical
83	83	110	111		RIGID	None	None	RIGID	Typical
84	84	112	113		RIGID	None	None	RIGID	Typical
85	85	114	115		MF-P1	Column	Pipe	A53 Gr.B	Typical
86	86	116	117		RIGID	None	None	RIGID	Typical
87	87	118	119		RIGID	None	None	RIGID	Typical
88	88	120	121		MF-P1	Column	Pipe	A53 Gr.B	Typical
89	89	122	123		RIGID	None	None	RIGID	Typical
90	90	124	125		RIGID	None	None	RIGID	Typical
91	91	126	127		MF-P1	Column	Pipe	A53 Gr.B	Typical
92	92	128	129	230	F1-V2-Mod	Column	Single Angle	A36 Gr.36	Typical
93	93	130	131	210	F1-V2-Mod	Column	Single Angle	A36 Gr.36	Typical
94	94	132	133	200	F1-V2-Mod	Column	Single Angle	A36 Gr.36	Typical
95	95	134	135	320	F1-V2-Mod	Column	Single Angle	A36 Gr.36	Typical
96	96	136	137	330	F1-V2-Mod	Column	Single Angle	A36 Gr.36	Typical
97	97	138	139	340	F1-V2-Mod	Column	Single Angle	A36 Gr.36	Typical
98	98	140	141	355	F1-V2-Mod	Column	Single Angle	A36 Gr.36	Typical
99	99	142	143	190	F1-V2-Mod	Column	Single Angle	A36 Gr.36	Typical
100	100	144	145		RIGID	None	None	RIGID	Typical
101	101	146	147		RIGID	None	None	RIGID	Typical
102	102	148	149		CF1	Beam	CS	A653 SS Gr33	Typical
103	103	150	151		RIGID	None	None	RIGID	Typical
104	104	152	153		RIGID	None	None	RIGID	Typical

Attachment: PC-2022-03 Packet (5952 : AT&T - Special Permit Application)

Member Primary Data (Continued)

	Label	I Node	J Node	Rotate(deg)	Section/Shape	Type	Design List	Material	Design Rule
105	105	154	155		CF1	Beam	CS	A653 SS Gr33	Typical
106	106	156	157		RIGID	None	None	RIGID	Typical
107	107	158	159		RIGID	None	None	RIGID	Typical
108	108	160	161		RIGID	None	None	RIGID	Typical
109	109	162	163		RIGID	None	None	RIGID	Typical
110	110	164	165	270	CF2	Column	CS	A653 SS Gr33	Typical
111	111	166	167	270	CF2	Column	CS	A653 SS Gr33	Typical
112	112	184	185		RIGID	None	None	RIGID	Typical
113	113	186	187		RIGID	None	None	RIGID	Typical
114	114	188	189		CF1	Beam	CS	A653 SS Gr33	Typical
115	115	190	191		RIGID	None	None	RIGID	Typical
116	116	192	193		RIGID	None	None	RIGID	Typical
117	117	194	195		CF1	Beam	CS	A653 SS Gr33	Typical
118	118	196	197		RIGID	None	None	RIGID	Typical
119	119	198	199		RIGID	None	None	RIGID	Typical
120	120	200	201		RIGID	None	None	RIGID	Typical
121	121	202	203		RIGID	None	None	RIGID	Typical
122	122	204	205	50	CF2	Column	CS	A653 SS Gr33	Typical
123	123	206	207	50	CF2	Column	CS	A653 SS Gr33	Typical
124	124	208	209		RIGID	None	None	RIGID	Typical
125	125	210	211		RIGID	None	None	RIGID	Typical
126	126	212	213		RIGID	None	None	RIGID	Typical
127	127	214	215		RIGID	None	None	RIGID	Typical

Member Advanced Data

	Label	I Release	Physical	Deflection Ratio Options	Seismic DR
1	1		Yes	** NA **	None
2	2		Yes	** NA **	None
3	3		Yes	** NA **	None
4	4		Yes	** NA **	None
5	5		Yes	** NA **	None
6	6		Yes	** NA **	None
7	7		Yes	** NA **	None
8	8		Yes	** NA **	None
9	9		Yes	** NA **	None
10	10		Yes	** NA **	None
11	11		Yes	** NA **	None
12	12		Yes	** NA **	None
13	13		Yes	** NA **	None
14	14		Yes	** NA **	None
15	15		Yes	** NA **	None
16	16		Yes	** NA **	None
17	17		Yes	N/A	None
18	18		Yes	N/A	None
19	19		Yes	N/A	None
20	20		Yes	N/A	None
21	21		Yes	N/A	None
22	22		Yes	N/A	None
23	23		Yes	N/A	None
24	24		Yes	N/A	None
25	25		Yes	N/A	None
26	26		Yes	N/A	None
27	27		Yes	N/A	None
28	28		Yes	N/A	None
29	29		Yes	N/A	None

Attachment: PC-2022-03 Packet (5952 : AT&T - Special Permit Application)

Member Advanced Data (Continued)

	Label	I Release	Physical	Deflection Ratio Options	Seismic DR
30	30		Yes	N/A	None
31	31		Yes	N/A	None
32	32		Yes	N/A	None
33	33		Yes	N/A	None
34	34		Yes	N/A	None
35	35		Yes	N/A	None
36	36		Yes	N/A	None
37	37		Yes	N/A	None
38	38		Yes	N/A	None
39	39		Yes	N/A	None
40	40		Yes	N/A	None
41	41		Yes	N/A	None
42	42		Yes	N/A	None
43	43		Yes	N/A	None
44	44		Yes	N/A	None
45	45		Yes	N/A	None
46	46		Yes	N/A	None
47	47		Yes	N/A	None
48	48		Yes	N/A	None
49	49		Yes	N/A	None
50	50		Yes	N/A	None
51	51		Yes	N/A	None
52	52		Yes	N/A	None
53	53		Yes	N/A	None
54	54		Yes	N/A	None
55	55		Yes	N/A	None
56	56		Yes	N/A	None
57	57		Yes	N/A	None
58	58		Yes	N/A	None
59	59		Yes	N/A	None
60	60		Yes	N/A	None
61	61		Yes	N/A	None
62	62		Yes	** NA **	None
63	63		Yes	** NA **	None
64	64		Yes	** NA **	None
65	65		Yes	** NA **	None
66	66		Yes	** NA **	None
67	67		Yes	** NA **	None
68	68		Yes	** NA **	None
69	69		Yes	** NA **	None
70	70		Yes	** NA **	None
71	71		Yes	** NA **	None
72	72		Yes	** NA **	None
73	73		Yes	** NA **	None
74	74		Yes	** NA **	None
75	75		Yes	** NA **	None
76	76		Yes	** NA **	None
77	77		Yes	** NA **	None
78	78		Yes	** NA **	None
79	79		Yes	** NA **	None
80	80		Yes	** NA **	None
81	81		Yes	** NA **	None
82	82		Yes	** NA **	None
83	83		Yes	** NA **	None
84	84		Yes	** NA **	None

Attachment: PC-2022-03 Packet (5952 : AT&T - Special Permit Application)

Member Advanced Data (Continued)

	Label	I Release	Physical	Deflection Ratio Options	Seismic DR
85	85		Yes	** NA **	None
86	86		Yes	** NA **	None
87	87		Yes	** NA **	None
88	88		Yes	** NA **	None
89	89		Yes	** NA **	None
90	90		Yes	** NA **	None
91	91		Yes	** NA **	None
92	92	BenPIN	Yes	** NA **	None
93	93	BenPIN	Yes	** NA **	None
94	94	BenPIN	Yes	** NA **	None
95	95	BenPIN	Yes	** NA **	None
96	96	BenPIN	Yes	** NA **	None
97	97	BenPIN	Yes	** NA **	None
98	98	BenPIN	Yes	** NA **	None
99	99	BenPIN	Yes	** NA **	None
100	100		Yes	** NA **	None
101	101		Yes	** NA **	None
102	102		Yes	N/A	None
103	103		Yes	** NA **	None
104	104		Yes	** NA **	None
105	105		Yes	N/A	None
106	106		Yes	** NA **	None
107	107		Yes	** NA **	None
108	108		Yes	** NA **	None
109	109		Yes	** NA **	None
110	110		Yes	** NA **	None
111	111		Yes	** NA **	None
112	112		Yes	** NA **	None
113	113		Yes	** NA **	None
114	114		Yes	N/A	None
115	115		Yes	** NA **	None
116	116		Yes	** NA **	None
117	117		Yes	N/A	None
118	118		Yes	** NA **	None
119	119		Yes	** NA **	None
120	120		Yes	** NA **	None
121	121		Yes	** NA **	None
122	122		Yes	** NA **	None
123	123		Yes	** NA **	None
124	124		Yes	** NA **	None
125	125		Yes	** NA **	None
126	126		Yes	** NA **	None
127	127		Yes	** NA **	None

Hot Rolled Steel Design Parameters

	Label	Shape	Length [ft]	Lcomp top [ft]	Function
1	1	F1-V1	3.542	Lbyy	Lateral
2	2	F1-V1	3.542	Lbyy	Lateral
3	3	F1-V1	3.542	Lbyy	Lateral
4	4	F1-V1	3.542	Lbyy	Lateral
5	5	F1-V1	3.542	Lbyy	Lateral
6	6	F1-V1	3.542	Lbyy	Lateral
7	7	F1-V1	3.542	Lbyy	Lateral
8	8	F1-V1	3.542	Lbyy	Lateral
9	9	F1-V1	3.542	Lbyy	Lateral

Attachment: PC-2022-03 Packet (5952 : AT&T - Special Permit Application)

Hot Rolled Steel Design Parameters (Continued)

	Label	Shape	Length [ft]	Lcomp top [ft]	Function
10	10	F1-V1	3.542	Lbyy	Lateral
11	11	F1-V1	3.542	Lbyy	Lateral
12	12	F1-V1	3.542	Lbyy	Lateral
13	13	F1-V1	3.542	Lbyy	Lateral
14	14	F1-V1	3.542	Lbyy	Lateral
15	15	F1-V1	3.542	Lbyy	Lateral
16	16	F1-V1	3.542	Lbyy	Lateral
17	17	F1-CP1	5.874	Lbyy	Lateral
18	18	F1-CA1	5.874	Lbyy	Lateral
19	19	F1-CA2	5.874	Lbyy	Lateral
20	20	F1-CP1	5.874	Lbyy	Lateral
21	21	F1-CA1	5.874	Lbyy	Lateral
22	22	F1-CA2	5.874	Lbyy	Lateral
23	23	F1-CP1	5.874	Lbyy	Lateral
24	24	F1-CA1	5.874	Lbyy	Lateral
25	25	F1-CA2	5.874	Lbyy	Lateral
26	26	F1-CP1	5.874	Lbyy	Lateral
27	27	F1-CA1	5.874	Lbyy	Lateral
28	28	F1-CA2	5.874	Lbyy	Lateral
29	29	F1-CP1	5.874	Lbyy	Lateral
30	30	F1-CA1	5.874	Lbyy	Lateral
31	31	F1-CA2	5.874	Lbyy	Lateral
32	32	F1-CP1	5.874	Lbyy	Lateral
33	33	F1-CA1	5.874	Lbyy	Lateral
34	34	F1-CA2	5.874	Lbyy	Lateral
35	35	F1-CP1	5.874	Lbyy	Lateral
36	36	F1-CA1	5.874	Lbyy	Lateral
37	37	F1-CA2	5.874	Lbyy	Lateral
38	38	F1-CP1	5.874	Lbyy	Lateral
39	39	F1-CA1	5.874	Lbyy	Lateral
40	40	F1-CA2	5.874	Lbyy	Lateral
41	41	F1-CP1	5.874	Lbyy	Lateral
42	42	F1-CA1	5.874	Lbyy	Lateral
43	43	F1-CA2	5.874	Lbyy	Lateral
44	44	F1-CP1	5.874	Lbyy	Lateral
45	45	F1-CA1	5.874	Lbyy	Lateral
46	46	F1-CA2	5.874	Lbyy	Lateral
47	47	F1-CP1	5.874	Lbyy	Lateral
48	48	F1-CA1	5.874	Lbyy	Lateral
49	49	F1-CA2	5.874	Lbyy	Lateral
50	50	F1-CP1	5.874	Lbyy	Lateral
51	51	F1-CA1	5.874	Lbyy	Lateral
52	52	F1-CA2	5.874	Lbyy	Lateral
53	53	F1-CP1	5.874	Lbyy	Lateral
54	54	F1-CA1	5.874	Lbyy	Lateral
55	55	F1-CA2	5.874	Lbyy	Lateral
56	56	F1-CP1	5.874	Lbyy	Lateral
57	57	F1-CA1	5.874	Lbyy	Lateral
58	58	F1-CA2	5.874	Lbyy	Lateral
59	59	F1-CP1	5.874	Lbyy	Lateral
60	60	F1-CA1	5.874	Lbyy	Lateral
61	61	F1-CA2	5.874	Lbyy	Lateral
62	63	MF-P1	10	Lbyy	Lateral
63	65	MF-P1	10	Lbyy	Lateral
64	70	MF-P1	10	Lbyy	Lateral

Attachment: PC-2022-03 Packet (5952 : AT&T - Special Permit Application)

Hot Rolled Steel Design Parameters (Continued)

	Label	Shape	Length [ft]	Lcomp top [ft]	Function
65	73	MF-P1	10	Lbyy	Lateral
66	76	MF-P1	4	Lbyy	Lateral
67	78	MF-P1	10	Lbyy	Lateral
68	80	MF-P1	10	Lbyy	Lateral
69	85	MF-P1	10	Lbyy	Lateral
70	88	MF-P1	10	Lbyy	Lateral
71	91	MF-P1	4	Lbyy	Lateral
72	92	F1-V2-Mod	3.542	Lbyy	Lateral
73	93	F1-V2-Mod	3.542	Lbyy	Lateral
74	94	F1-V2-Mod	3.542	Lbyy	Lateral
75	95	F1-V2-Mod	3.542	Lbyy	Lateral
76	96	F1-V2-Mod	3.542	Lbyy	Lateral
77	97	F1-V2-Mod	3.542	Lbyy	Lateral
78	98	F1-V2-Mod	3.542	Lbyy	Lateral
79	99	F1-V2-Mod	3.542	Lbyy	Lateral

Cold Formed Steel Design Parameters

	Label	Shape	Length [ft]	Lcomp top [ft]	Function
1	102	CF1	3.25	Lbyy	Lateral
2	105	CF1	3.25	Lbyy	Lateral
3	110	CF2	2	Lbyy	Lateral
4	111	CF2	2	Lbyy	Lateral
5	114	CF1	3.25	Lbyy	Lateral
6	117	CF1	3.25	Lbyy	Lateral
7	122	CF2	2	Lbyy	Lateral
8	123	CF2	2	Lbyy	Lateral

Member Point Loads (BLC 1 : Dead)

	Member Label	Direction	Magnitude [k, k-ft]	Location [(ft, %)]
1	73	Y	-0.054	%5
2	73	Y	-0.054	%90
3	73	Y	0	0
4	73	Y	0	0
5	73	Y	0	0
6	63	Y	-0.054	%5
7	63	Y	-0.054	%90
8	63	Y	-0.053	%20
9	63	Y	0	0
10	63	Y	0	0
11	65	Y	-0.041	%5
12	65	Y	-0.041	%30
13	65	Y	-0.033	%65
14	65	Y	-0.033	%85
15	65	Y	0	0
16	70	Y	-0.044	%5
17	70	Y	-0.044	%85
18	70	Y	-0.073	%20
19	70	Y	-0.053	%20
20	70	Y	0	0
21	88	Y	-0.054	%5
22	88	Y	-0.054	%90
23	88	Y	0	0
24	88	Y	0	0

Attachment: PC-2022-03 Packet (5952 : AT&T - Special Permit Application)

Member Point Loads (BLC 1 : Dead) (Continued)

	Member Label	Direction	Magnitude [k, k-ft]	Location [(ft, %)]
25	88	Y	0	0
26	78	Y	-0.054	%5
27	78	Y	-0.054	%90
28	78	Y	-0.053	%20
29	78	Y	0	0
30	78	Y	0	0
31	80	Y	-0.041	%5
32	80	Y	-0.041	%30
33	80	Y	-0.033	%65
34	80	Y	-0.033	%85
35	80	Y	0	0
36	85	Y	-0.044	%5
37	85	Y	-0.044	%85
38	85	Y	-0.073	%20
39	85	Y	-0.053	%20
40	85	Y	0	0
41	76	Y	-0.06	%50
42	76	Y	-0.053	%50
43	76	Y	0	0
44	76	Y	0	0
45	76	Y	0	0
46	91	Y	-0.06	%50
47	91	Y	-0.053	%50
48	91	Y	0	0
49	91	Y	0	0
50	91	Y	0	0
51	21	Y	-0.016	%30
52	21	Y	0	0
53	21	Y	0	0
54	21	Y	0	0
55	21	Y	0	0
56	125	Y	-0.016	%50
57	125	Y	0	0
58	125	Y	0	0
59	125	Y	0	0
60	125	Y	0	0
61	24	Y	-0.016	%15
62	24	Y	0	0
63	24	Y	0	0
64	24	Y	0	0
65	24	Y	0	0
66	18	Y	-0.016	%25
67	18	Y	0	0
68	18	Y	0	0
69	18	Y	0	0
70	18	Y	0	0
71	127	Y	-0.02	%50
72	127	Y	0	0
73	127	Y	0	0
74	127	Y	0	0
75	127	Y	0	0
76	124	Y	-0.02	%50
77	124	Y	0	0
78	124	Y	0	0
79	124	Y	0	0

Attachment: PC-2022-03 Packet (5952 : AT&T - Special Permit Application)

Member Point Loads (BLC 1 : Dead) (Continued)

	Member Label	Direction	Magnitude [k, k-ft]	Location [(ft, %)]
80	124	Y	0	0
81	33	Y	-0.016	%30
82	33	Y	0	0
83	33	Y	0	0
84	33	Y	0	0
85	33	Y	0	0
86	126	Y	-0.016	%50
87	126	Y	0	0
88	126	Y	0	0
89	126	Y	0	0
90	126	Y	0	0
91	36	Y	-0.016	%15
92	36	Y	0	0
93	36	Y	0	0
94	36	Y	0	0
95	36	Y	0	0
96	30	Y	-0.016	%25
97	30	Y	0	0
98	30	Y	0	0
99	30	Y	0	0
100	30	Y	0	0
101	27	Y	-0.02	%15
102	27	Y	0	0
103	27	Y	0	0
104	27	Y	0	0
105	27	Y	0	0

Member Point Loads (BLC 2 : 0 Wind - No Ice)

	Member Label	Direction	Magnitude [k, k-ft]	Location [(ft, %)]
1	73	Z	-0.185	%5
2	73	Z	-0.185	%90
3	73	Z	0	0
4	73	Z	0	0
5	73	Z	0	0
6	63	Z	-0.185	%5
7	63	Z	-0.185	%90
8	63	Z	-0.056	%20
9	63	Z	0	0
10	63	Z	0	0
11	65	Z	-0.067	%5
12	65	Z	-0.067	%30
13	65	Z	-0.061	%65
14	65	Z	-0.061	%85
15	65	Z	0	0
16	70	Z	-0.294	%5
17	70	Z	-0.294	%85
18	70	Z	-0.043	%20
19	70	Z	-0.056	%20
20	70	Z	0	0
21	88	Z	-0.185	%5
22	88	Z	-0.185	%90
23	88	Z	0	0
24	88	Z	0	0
25	88	Z	0	0
26	78	Z	-0.185	%5

Attachment: PC-2022-03 Packet (5952 : AT&T - Special Permit Application)

Member Point Loads (BLC 2 : 0 Wind - No Ice) (Continued)

	Member Label	Direction	Magnitude [k, k-ft]	Location [(ft, %)]
27	78	Z	-0.185	%90
28	78	Z	-0.056	%20
29	78	Z	0	0
30	78	Z	0	0
31	80	Z	-0.067	%5
32	80	Z	-0.067	%30
33	80	Z	-0.061	%65
34	80	Z	-0.061	%85
35	80	Z	0	0
36	85	Z	-0.294	%5
37	85	Z	-0.294	%85
38	85	Z	-0.043	%20
39	85	Z	-0.056	%20
40	85	Z	0	0
41	76	Z	-0.035	%50
42	76	Z	-0.056	%50
43	76	Z	0	0
44	76	Z	0	0
45	76	Z	0	0
46	91	Z	-0.035	%50
47	91	Z	-0.056	%50
48	91	Z	0	0
49	91	Z	0	0
50	91	Z	0	0
51	21	Z	-0.029	%30
52	21	Z	0	0
53	21	Z	0	0
54	21	Z	0	0
55	21	Z	0	0
56	125	Z	-0.029	%50
57	125	Z	0	0
58	125	Z	0	0
59	125	Z	0	0
60	125	Z	0	0
61	24	Z	-0.029	%15
62	24	Z	0	0
63	24	Z	0	0
64	24	Z	0	0
65	24	Z	0	0
66	18	Z	-0.029	%25
67	18	Z	0	0
68	18	Z	0	0
69	18	Z	0	0
70	18	Z	0	0
71	127	Z	-0.07	%50
72	127	Z	0	0
73	127	Z	0	0
74	127	Z	0	0
75	127	Z	0	0
76	124	Z	-0.07	%50
77	124	Z	0	0
78	124	Z	0	0
79	124	Z	0	0
80	124	Z	0	0
81	33	Z	-0.029	%30

Attachment: PC-2022-03 Packet (5952 : AT&T - Special Permit Application)

Member Point Loads (BLC 2 : 0 Wind - No Ice) (Continued)

	Member Label	Direction	Magnitude [k, k-ft]	Location [(ft, %)]
82	33	Z	0	0
83	33	Z	0	0
84	33	Z	0	0
85	33	Z	0	0
86	126	Z	-0.029	%50
87	126	Z	0	0
88	126	Z	0	0
89	126	Z	0	0
90	126	Z	0	0
91	36	Z	-0.029	%15
92	36	Z	0	0
93	36	Z	0	0
94	36	Z	0	0
95	36	Z	0	0
96	30	Z	-0.029	%25
97	30	Z	0	0
98	30	Z	0	0
99	30	Z	0	0
100	30	Z	0	0
101	27	Z	-0.07	%15
102	27	Z	0	0
103	27	Z	0	0
104	27	Z	0	0
105	27	Z	0	0

Member Point Loads (BLC 3 : 90 Wind - No Ice)

	Member Label	Direction	Magnitude [k, k-ft]	Location [(ft, %)]
1	73	X	-0.084	%5
2	73	X	-0.084	%90
3	73	X	0	0
4	73	X	0	0
5	73	X	0	0
6	63	X	-0.084	%5
7	63	X	-0.084	%90
8	63	X	-0.096	%20
9	63	X	0	0
10	63	X	0	0
11	65	X	-0.034	%5
12	65	X	-0.034	%30
13	65	X	-0.026	%65
14	65	X	-0.026	%85
15	65	X	0	0
16	70	X	-0.11	%5
17	70	X	-0.11	%85
18	70	X	-0.055	%20
19	70	X	-0.096	%20
20	70	X	0	0
21	88	X	-0.084	%5
22	88	X	-0.084	%90
23	88	X	0	0
24	88	X	0	0
25	88	X	0	0
26	78	X	-0.084	%5
27	78	X	-0.084	%90
28	78	X	-0.096	%20

Attachment: PC-2022-03 Packet (5952 : AT&T - Special Permit Application)

Member Point Loads (BLC 3 : 90 Wind - No Ice) (Continued)

	Member Label	Direction	Magnitude [k, k-ft]	Location [(ft, %)]
29	78	X	0	0
30	78	X	0	0
31	80	X	-0.034	%5
32	80	X	-0.034	%30
33	80	X	-0.026	%65
34	80	X	-0.026	%85
35	80	X	0	0
36	85	X	-0.11	%5
37	85	X	-0.11	%85
38	85	X	-0.055	%20
39	85	X	-0.096	%20
40	85	X	0	0
41	76	X	-0.061	%50
42	76	X	-0.096	%50
43	76	X	0	0
44	76	X	0	0
45	76	X	0	0
46	91	X	-0.061	%50
47	91	X	-0.096	%50
48	91	X	0	0
49	91	X	0	0
50	91	X	0	0
51	21	X	-0.018	%30
52	21	X	0	0
53	21	X	0	0
54	21	X	0	0
55	21	X	0	0
56	125	X	-0.018	%50
57	125	X	0	0
58	125	X	0	0
59	125	X	0	0
60	125	X	0	0
61	24	X	-0.018	%15
62	24	X	0	0
63	24	X	0	0
64	24	X	0	0
65	24	X	0	0
66	18	X	-0.018	%25
67	18	X	0	0
68	18	X	0	0
69	18	X	0	0
70	18	X	0	0
71	127	X	-0.03	%50
72	127	X	0	0
73	127	X	0	0
74	127	X	0	0
75	127	X	0	0
76	124	X	-0.03	%50
77	124	X	0	0
78	124	X	0	0
79	124	X	0	0
80	124	X	0	0
81	33	X	-0.018	%30
82	33	X	0	0
83	33	X	0	0

Attachment: PC-2022-03 Packet (5952 : AT&T - Special Permit Application)

Member Point Loads (BLC 3 : 90 Wind - No Ice) (Continued)

	Member Label	Direction	Magnitude [k, k-ft]	Location [(ft, %)]
84	33	X	0	0
85	33	X	0	0
86	126	X	-0.018	%50
87	126	X	0	0
88	126	X	0	0
89	126	X	0	0
90	126	X	0	0
91	36	X	-0.018	%15
92	36	X	0	0
93	36	X	0	0
94	36	X	0	0
95	36	X	0	0
96	30	X	-0.018	%25
97	30	X	0	0
98	30	X	0	0
99	30	X	0	0
100	30	X	0	0
101	27	X	-0.03	%15
102	27	X	0	0
103	27	X	0	0
104	27	X	0	0
105	27	X	0	0

Member Point Loads (BLC 4 : 0 Wind - Ice)

	Member Label	Direction	Magnitude [k, k-ft]	Location [(ft, %)]
1	73	Z	-0.031	%5
2	73	Z	-0.031	%90
3	73	Z	0	0
4	73	Z	0	0
5	73	Z	0	0
6	63	Z	-0.031	%5
7	63	Z	-0.031	%90
8	63	Z	-0.008	%20
9	63	Z	0	0
10	63	Z	0	0
11	65	Z	-0.009	%5
12	65	Z	-0.009	%30
13	65	Z	-0.008	%65
14	65	Z	-0.008	%85
15	65	Z	0	0
16	70	Z	-0.047	%5
17	70	Z	-0.047	%85
18	70	Z	-0.006	%20
19	70	Z	-0.008	%20
20	70	Z	0	0
21	88	Z	-0.031	%5
22	88	Z	-0.031	%90
23	88	Z	0	0
24	88	Z	0	0
25	88	Z	0	0
26	78	Z	-0.031	%5
27	78	Z	-0.031	%90
28	78	Z	-0.008	%20
29	78	Z	0	0
30	78	Z	0	0

Attachment: PC-2022-03 Packet (5952 : AT&T - Special Permit Application)

Member Point Loads (BLC 4 : 0 Wind - Ice) (Continued)

	Member Label	Direction	Magnitude [k, k-ft]	Location [(ft, %)]
31	80	Z	-0.009	%5
32	80	Z	-0.009	%30
33	80	Z	-0.008	%65
34	80	Z	-0.008	%85
35	80	Z	0	0
36	85	Z	-0.047	%5
37	85	Z	-0.047	%85
38	85	Z	-0.006	%20
39	85	Z	-0.008	%20
40	85	Z	0	0
41	76	Z	-0.005	%50
42	76	Z	-0.008	%50
43	76	Z	0	0
44	76	Z	0	0
45	76	Z	0	0
46	91	Z	-0.005	%50
47	91	Z	-0.008	%50
48	91	Z	0	0
49	91	Z	0	0
50	91	Z	0	0
51	21	Z	-0.004	%30
52	21	Z	0	0
53	21	Z	0	0
54	21	Z	0	0
55	21	Z	0	0
56	125	Z	-0.004	%50
57	125	Z	0	0
58	125	Z	0	0
59	125	Z	0	0
60	125	Z	0	0
61	24	Z	-0.004	%15
62	24	Z	0	0
63	24	Z	0	0
64	24	Z	0	0
65	24	Z	0	0
66	18	Z	-0.004	%25
67	18	Z	0	0
68	18	Z	0	0
69	18	Z	0	0
70	18	Z	0	0
71	127	Z	-0.009	%50
72	127	Z	0	0
73	127	Z	0	0
74	127	Z	0	0
75	127	Z	0	0
76	124	Z	-0.009	%50
77	124	Z	0	0
78	124	Z	0	0
79	124	Z	0	0
80	124	Z	0	0
81	33	Z	-0.004	%30
82	33	Z	0	0
83	33	Z	0	0
84	33	Z	0	0
85	33	Z	0	0

Attachment: PC-2022-03 Packet (5952 : AT&T - Special Permit Application)

Member Point Loads (BLC 4 : 0 Wind - Ice) (Continued)

	Member Label	Direction	Magnitude [k, k-ft]	Location [(ft, %)]
86	126	Z	-0.004	%50
87	126	Z	0	0
88	126	Z	0	0
89	126	Z	0	0
90	126	Z	0	0
91	36	Z	-0.004	%15
92	36	Z	0	0
93	36	Z	0	0
94	36	Z	0	0
95	36	Z	0	0
96	30	Z	-0.004	%25
97	30	Z	0	0
98	30	Z	0	0
99	30	Z	0	0
100	30	Z	0	0
101	27	Z	-0.009	%15
102	27	Z	0	0
103	27	Z	0	0
104	27	Z	0	0
105	27	Z	0	0

Member Point Loads (BLC 5 : 90 Wind - Ice)

	Member Label	Direction	Magnitude [k, k-ft]	Location [(ft, %)]
1	73	X	-0.017	%5
2	73	X	-0.017	%90
3	73	X	0	0
4	73	X	0	0
5	73	X	0	0
6	63	X	-0.017	%5
7	63	X	-0.017	%90
8	63	X	-0.013	%20
9	63	X	0	0
10	63	X	0	0
11	65	X	-0.005	%5
12	65	X	-0.005	%30
13	65	X	-0.004	%65
14	65	X	-0.004	%85
15	65	X	0	0
16	70	X	-0.021	%5
17	70	X	-0.021	%85
18	70	X	-0.007	%20
19	70	X	-0.013	%20
20	70	X	0	0
21	88	X	-0.017	%5
22	88	X	-0.017	%90
23	88	X	0	0
24	88	X	0	0
25	88	X	0	0
26	78	X	-0.017	%5
27	78	X	-0.017	%90
28	78	X	-0.013	%20
29	78	X	0	0
30	78	X	0	0
31	80	X	-0.005	%5
32	80	X	-0.005	%30

Attachment: PC-2022-03 Packet (5952 : AT&T - Special Permit Application)

Member Point Loads (BLC 5 : 90 Wind - Ice) (Continued)

	Member Label	Direction	Magnitude [k, k-ft]	Location [(ft, %)]
33	80	X	-0.004	%65
34	80	X	-0.004	%85
35	80	X	0	0
36	85	X	-0.021	%5
37	85	X	-0.021	%85
38	85	X	-0.007	%20
39	85	X	-0.013	%20
40	85	X	0	0
41	76	X	-0.008	%50
42	76	X	-0.013	%50
43	76	X	0	0
44	76	X	0	0
45	76	X	0	0
46	91	X	-0.008	%50
47	91	X	-0.013	%50
48	91	X	0	0
49	91	X	0	0
50	91	X	0	0
51	21	X	-0.002	%30
52	21	X	0	0
53	21	X	0	0
54	21	X	0	0
55	21	X	0	0
56	125	X	-0.002	%50
57	125	X	0	0
58	125	X	0	0
59	125	X	0	0
60	125	X	0	0
61	24	X	-0.002	%15
62	24	X	0	0
63	24	X	0	0
64	24	X	0	0
65	24	X	0	0
66	18	X	-0.002	%25
67	18	X	0	0
68	18	X	0	0
69	18	X	0	0
70	18	X	0	0
71	127	X	-0.004	%50
72	127	X	0	0
73	127	X	0	0
74	127	X	0	0
75	127	X	0	0
76	124	X	-0.004	%50
77	124	X	0	0
78	124	X	0	0
79	124	X	0	0
80	124	X	0	0
81	33	X	-0.002	%30
82	33	X	0	0
83	33	X	0	0
84	33	X	0	0
85	33	X	0	0
86	126	X	-0.002	%50
87	126	X	0	0

Attachment: PC-2022-03 Packet (5952 : AT&T - Special Permit Application)

Member Point Loads (BLC 5 : 90 Wind - Ice) (Continued)

	Member Label	Direction	Magnitude [k, k-ft]	Location [(ft, %)]
88	126	X	0	0
89	126	X	0	0
90	126	X	0	0
91	36	X	-0.002	%15
92	36	X	0	0
93	36	X	0	0
94	36	X	0	0
95	36	X	0	0
96	30	X	-0.002	%25
97	30	X	0	0
98	30	X	0	0
99	30	X	0	0
100	30	X	0	0
101	27	X	-0.004	%15
102	27	X	0	0
103	27	X	0	0
104	27	X	0	0
105	27	X	0	0

Member Point Loads (BLC 6 : 0 Wind - Service)

	Member Label	Direction	Magnitude [k, k-ft]	Location [(ft, %)]
1	73	Z	-0.014	%5
2	73	Z	-0.014	%90
3	73	Z	0	0
4	73	Z	0	0
5	73	Z	0	0
6	63	Z	-0.014	%5
7	63	Z	-0.014	%90
8	63	Z	-0.004	%20
9	63	Z	0	0
10	63	Z	0	0
11	65	Z	-0.005	%5
12	65	Z	-0.005	%30
13	65	Z	-0.005	%65
14	65	Z	-0.005	%85
15	65	Z	0	0
16	70	Z	-0.022	%5
17	70	Z	-0.022	%85
18	70	Z	-0.003	%20
19	70	Z	-0.004	%20
20	70	Z	0	0
21	88	Z	-0.014	%5
22	88	Z	-0.014	%90
23	88	Z	0	0
24	88	Z	0	0
25	88	Z	0	0
26	78	Z	-0.014	%5
27	78	Z	-0.014	%90
28	78	Z	-0.004	%20
29	78	Z	0	0
30	78	Z	0	0
31	80	Z	-0.005	%5
32	80	Z	-0.005	%30
33	80	Z	-0.005	%65
34	80	Z	-0.005	%85

Attachment: PC-2022-03 Packet (5952 : AT&T - Special Permit Application)

Member Point Loads (BLC 6 : 0 Wind - Service) (Continued)

	Member Label	Direction	Magnitude [k, k-ft]	Location [(ft, %)]
35	80	Z	0	0
36	85	Z	-0.022	%5
37	85	Z	-0.022	%85
38	85	Z	-0.003	%20
39	85	Z	-0.004	%20
40	85	Z	0	0
41	76	Z	-0.003	%50
42	76	Z	-0.004	%50
43	76	Z	0	0
44	76	Z	0	0
45	76	Z	0	0
46	91	Z	-0.003	%50
47	91	Z	-0.004	%50
48	91	Z	0	0
49	91	Z	0	0
50	91	Z	0	0
51	21	Z	-0.002	%30
52	21	Z	0	0
53	21	Z	0	0
54	21	Z	0	0
55	21	Z	0	0
56	125	Z	-0.002	%50
57	125	Z	0	0
58	125	Z	0	0
59	125	Z	0	0
60	125	Z	0	0
61	24	Z	-0.002	%15
62	24	Z	0	0
63	24	Z	0	0
64	24	Z	0	0
65	24	Z	0	0
66	18	Z	-0.002	%25
67	18	Z	0	0
68	18	Z	0	0
69	18	Z	0	0
70	18	Z	0	0
71	127	Z	-0.005	%50
72	127	Z	0	0
73	127	Z	0	0
74	127	Z	0	0
75	127	Z	0	0
76	124	Z	-0.005	%50
77	124	Z	0	0
78	124	Z	0	0
79	124	Z	0	0
80	124	Z	0	0
81	33	Z	-0.002	%30
82	33	Z	0	0
83	33	Z	0	0
84	33	Z	0	0
85	33	Z	0	0
86	126	Z	-0.002	%50
87	126	Z	0	0
88	126	Z	0	0
89	126	Z	0	0

Attachment: PC-2022-03 Packet (5952 : AT&T - Special Permit Application)

Member Point Loads (BLC 6 : 0 Wind - Service) (Continued)

	Member Label	Direction	Magnitude [k, k-ft]	Location [(ft, %)]
90	126	Z	0	0
91	36	Z	-0.002	%15
92	36	Z	0	0
93	36	Z	0	0
94	36	Z	0	0
95	36	Z	0	0
96	30	Z	-0.002	%25
97	30	Z	0	0
98	30	Z	0	0
99	30	Z	0	0
100	30	Z	0	0
101	27	Z	-0.005	%15
102	27	Z	0	0
103	27	Z	0	0
104	27	Z	0	0
105	27	Z	0	0

Member Point Loads (BLC 7 : 90 Wind - Service)

	Member Label	Direction	Magnitude [k, k-ft]	Location [(ft, %)]
1	73	X	-0.006	%5
2	73	X	-0.006	%90
3	73	X	0	0
4	73	X	0	0
5	73	X	0	0
6	63	X	-0.006	%5
7	63	X	-0.006	%90
8	63	X	-0.007	%20
9	63	X	0	0
10	63	X	0	0
11	65	X	-0.003	%5
12	65	X	-0.003	%30
13	65	X	-0.002	%65
14	65	X	-0.002	%85
15	65	X	0	0
16	70	X	-0.008	%5
17	70	X	-0.008	%85
18	70	X	-0.004	%20
19	70	X	-0.007	%20
20	70	X	0	0
21	88	X	-0.006	%5
22	88	X	-0.006	%90
23	88	X	0	0
24	88	X	0	0
25	88	X	0	0
26	78	X	-0.006	%5
27	78	X	-0.006	%90
28	78	X	-0.007	%20
29	78	X	0	0
30	78	X	0	0
31	80	X	-0.003	%5
32	80	X	-0.003	%30
33	80	X	-0.002	%65
34	80	X	-0.002	%85
35	80	X	0	0
36	85	X	-0.008	%5

Attachment: PC-2022-03 Packet (5952 : AT&T - Special Permit Application)

Member Point Loads (BLC 7 : 90 Wind - Service) (Continued)

	Member Label	Direction	Magnitude [k, k-ft]	Location [(ft, %)]
37	85	X	-0.008	%85
38	85	X	-0.004	%20
39	85	X	-0.007	%20
40	85	X	0	0
41	76	X	-0.005	%50
42	76	X	-0.007	%50
43	76	X	0	0
44	76	X	0	0
45	76	X	0	0
46	91	X	-0.005	%50
47	91	X	-0.007	%50
48	91	X	0	0
49	91	X	0	0
50	91	X	0	0
51	21	X	-0.001	%30
52	21	X	0	0
53	21	X	0	0
54	21	X	0	0
55	21	X	0	0
56	125	X	-0.001	%50
57	125	X	0	0
58	125	X	0	0
59	125	X	0	0
60	125	X	0	0
61	24	X	-0.001	%15
62	24	X	0	0
63	24	X	0	0
64	24	X	0	0
65	24	X	0	0
66	18	X	-0.001	%25
67	18	X	0	0
68	18	X	0	0
69	18	X	0	0
70	18	X	0	0
71	127	X	-0.002	%50
72	127	X	0	0
73	127	X	0	0
74	127	X	0	0
75	127	X	0	0
76	124	X	-0.002	%50
77	124	X	0	0
78	124	X	0	0
79	124	X	0	0
80	124	X	0	0
81	33	X	-0.001	%30
82	33	X	0	0
83	33	X	0	0
84	33	X	0	0
85	33	X	0	0
86	126	X	-0.001	%50
87	126	X	0	0
88	126	X	0	0
89	126	X	0	0
90	126	X	0	0
91	36	X	-0.001	%15

Attachment: PC-2022-03 Packet (5952 : AT&T - Special Permit Application)

Member Point Loads (BLC 7 : 90 Wind - Service) (Continued)

	Member Label	Direction	Magnitude [k, k-ft]	Location [(ft, %)]
92	36	X	0	0
93	36	X	0	0
94	36	X	0	0
95	36	X	0	0
96	30	X	-0.001	%25
97	30	X	0	0
98	30	X	0	0
99	30	X	0	0
100	30	X	0	0
101	27	X	-0.002	%15
102	27	X	0	0
103	27	X	0	0
104	27	X	0	0
105	27	X	0	0

Member Point Loads (BLC 8 : Ice)

	Member Label	Direction	Magnitude [k, k-ft]	Location [(ft, %)]
1	73	Y	-0.191	%5
2	73	Y	-0.191	%90
3	73	Y	0	0
4	73	Y	0	0
5	73	Y	0	0
6	63	Y	-0.191	%5
7	63	Y	-0.191	%90
8	63	Y	-0.075	%20
9	63	Y	0	0
10	63	Y	0	0
11	65	Y	-0.052	%5
12	65	Y	-0.052	%30
13	65	Y	-0.046	%65
14	65	Y	-0.046	%85
15	65	Y	0	0
16	70	Y	-0.207	%5
17	70	Y	-0.207	%85
18	70	Y	-0.049	%20
19	70	Y	-0.075	%20
20	70	Y	0	0
21	88	Y	-0.191	%5
22	88	Y	-0.191	%90
23	88	Y	0	0
24	88	Y	0	0
25	88	Y	0	0
26	78	Y	-0.191	%5
27	78	Y	-0.191	%90
28	78	Y	-0.075	%20
29	78	Y	0	0
30	78	Y	0	0
31	80	Y	-0.052	%5
32	80	Y	-0.052	%30
33	80	Y	-0.046	%65
34	80	Y	-0.046	%85
35	80	Y	0	0
36	85	Y	-0.207	%5
37	85	Y	-0.207	%85
38	85	Y	-0.049	%20

Attachment: PC-2022-03 Packet (5952 : AT&T - Special Permit Application)

Member Point Loads (BLC 8 : Ice) (Continued)

	Member Label	Direction	Magnitude [k, k-ft]	Location [(ft, %)]
39	85	Y	-0.075	%20
40	85	Y	0	0
41	76	Y	-0.05	%50
42	76	Y	-0.075	%50
43	76	Y	0	0
44	76	Y	0	0
45	76	Y	0	0
46	91	Y	-0.05	%50
47	91	Y	-0.075	%50
48	91	Y	0	0
49	91	Y	0	0
50	91	Y	0	0
51	21	Y	-0.025	%30
52	21	Y	0	0
53	21	Y	0	0
54	21	Y	0	0
55	21	Y	0	0
56	125	Y	-0.025	%50
57	125	Y	0	0
58	125	Y	0	0
59	125	Y	0	0
60	125	Y	0	0
61	24	Y	-0.025	%15
62	24	Y	0	0
63	24	Y	0	0
64	24	Y	0	0
65	24	Y	0	0
66	18	Y	-0.025	%25
67	18	Y	0	0
68	18	Y	0	0
69	18	Y	0	0
70	18	Y	0	0
71	127	Y	-0.053	%50
72	127	Y	0	0
73	127	Y	0	0
74	127	Y	0	0
75	127	Y	0	0
76	124	Y	-0.053	%50
77	124	Y	0	0
78	124	Y	0	0
79	124	Y	0	0
80	124	Y	0	0
81	33	Y	-0.025	%30
82	33	Y	0	0
83	33	Y	0	0
84	33	Y	0	0
85	33	Y	0	0
86	126	Y	-0.025	%50
87	126	Y	0	0
88	126	Y	0	0
89	126	Y	0	0
90	126	Y	0	0
91	36	Y	-0.025	%15
92	36	Y	0	0
93	36	Y	0	0

Attachment: PC-2022-03 Packet (5952 : AT&T - Special Permit Application)

Member Point Loads (BLC 8 : Ice) (Continued)

	Member Label	Direction	Magnitude [k, k-ft]	Location [(ft, %)]
94	36	Y	0	0
95	36	Y	0	0
96	30	Y	-0.025	%25
97	30	Y	0	0
98	30	Y	0	0
99	30	Y	0	0
100	30	Y	0	0
101	27	Y	-0.053	%15
102	27	Y	0	0
103	27	Y	0	0
104	27	Y	0	0
105	27	Y	0	0

Member Point Loads (BLC 9 : 0 Seismic)

	Member Label	Direction	Magnitude [k, k-ft]	Location [(ft, %)]
1	73	Z	-0.051	%5
2	73	Z	-0.051	%90
3	73	Z	0	0
4	73	Z	0	0
5	73	Z	0	0
6	63	Z	-0.051	%5
7	63	Z	-0.051	%90
8	63	Z	-0.025	%20
9	63	Z	0	0
10	63	Z	0	0
11	65	Z	-0.038	%5
12	65	Z	-0.038	%30
13	65	Z	-0.031	%65
14	65	Z	-0.031	%85
15	65	Z	0	0
16	70	Z	-0.041	%5
17	70	Z	-0.041	%85
18	70	Z	-0.034	%20
19	70	Z	-0.025	%20
20	70	Z	0	0
21	88	Z	-0.051	%5
22	88	Z	-0.051	%90
23	88	Z	0	0
24	88	Z	0	0
25	88	Z	0	0
26	78	Z	-0.051	%5
27	78	Z	-0.051	%90
28	78	Z	-0.025	%20
29	78	Z	0	0
30	78	Z	0	0
31	80	Z	-0.038	%5
32	80	Z	-0.038	%30
33	80	Z	-0.031	%65
34	80	Z	-0.031	%85
35	80	Z	0	0
36	85	Z	-0.041	%5
37	85	Z	-0.041	%85
38	85	Z	-0.034	%20
39	85	Z	-0.025	%20
40	85	Z	0	0

Attachment: PC-2022-03 Packet (5952 : AT&T - Special Permit Application)

Member Point Loads (BLC 9 : 0 Seismic) (Continued)

	Member Label	Direction	Magnitude [k, k-ft]	Location [(ft, %)]
41	76	Z	-0.028	%50
42	76	Z	-0.025	%50
43	76	Z	0	0
44	76	Z	0	0
45	76	Z	0	0
46	91	Z	-0.028	%50
47	91	Z	-0.025	%50
48	91	Z	0	0
49	91	Z	0	0
50	91	Z	0	0
51	21	Z	-0.008	%30
52	21	Z	0	0
53	21	Z	0	0
54	21	Z	0	0
55	21	Z	0	0
56	125	Z	-0.008	%50
57	125	Z	0	0
58	125	Z	0	0
59	125	Z	0	0
60	125	Z	0	0
61	24	Z	-0.008	%15
62	24	Z	0	0
63	24	Z	0	0
64	24	Z	0	0
65	24	Z	0	0
66	18	Z	-0.008	%25
67	18	Z	0	0
68	18	Z	0	0
69	18	Z	0	0
70	18	Z	0	0
71	127	Z	-0.01	%50
72	127	Z	0	0
73	127	Z	0	0
74	127	Z	0	0
75	127	Z	0	0
76	124	Z	-0.01	%50
77	124	Z	0	0
78	124	Z	0	0
79	124	Z	0	0
80	124	Z	0	0
81	33	Z	-0.008	0
82	33	Z	0	0
83	33	Z	0	0
84	33	Z	0	0
85	33	Z	0	%50
86	126	Z	-0.008	%50
87	126	Z	0	0
88	126	Z	0	0
89	126	Z	0	0
90	126	Z	0	0
91	36	Z	-0.008	%15
92	36	Z	0	0
93	36	Z	0	0
94	36	Z	0	0
95	36	Z	0	0

Attachment: PC-2022-03 Packet (5952 : AT&T - Special Permit Application)

Member Point Loads (BLC 9 : 0 Seismic) (Continued)

	Member Label	Direction	Magnitude [k, k-ft]	Location [(ft, %)]
96	30	Z	-0.008	%25
97	30	Z	0	0
98	30	Z	0	0
99	30	Z	0	0
100	30	Z	0	0
101	27	Z	-0.01	%15
102	27	Z	0	0
103	27	Z	0	0
104	27	Z	0	0
105	27	Z	0	0

Member Point Loads (BLC 10 : 90 Seismic)

	Member Label	Direction	Magnitude [k, k-ft]	Location [(ft, %)]
1	73	X	-0.051	%5
2	73	X	-0.051	%90
3	73	X	0	0
4	73	X	0	0
5	73	X	0	0
6	63	X	-0.051	%5
7	63	X	-0.051	%90
8	63	X	-0.025	%20
9	63	X	0	0
10	63	X	0	0
11	65	X	-0.038	%5
12	65	X	-0.038	%30
13	65	X	-0.031	%65
14	65	X	-0.031	%85
15	65	X	0	0
16	70	X	-0.041	%5
17	70	X	-0.041	%85
18	70	X	-0.034	%20
19	70	X	-0.025	%20
20	70	X	0	0
21	88	X	-0.051	%5
22	88	X	-0.051	%90
23	88	X	0	0
24	88	X	0	0
25	88	X	0	0
26	78	X	-0.051	%5
27	78	X	-0.051	%90
28	78	X	-0.025	%20
29	78	X	0	0
30	78	X	0	0
31	80	X	-0.038	%5
32	80	X	-0.038	%30
33	80	X	-0.031	%65
34	80	X	-0.031	%85
35	80	X	0	0
36	85	X	-0.041	%5
37	85	X	-0.041	%85
38	85	X	-0.034	%20
39	85	X	-0.025	%20
40	85	X	0	0
41	76	X	-0.028	%50
42	76	X	-0.025	%50

Attachment: PC-2022-03 Packet (5952 : AT&T - Special Permit Application)

Member Point Loads (BLC 10 : 90 Seismic) (Continued)

	Member Label	Direction	Magnitude [k, k-ft]	Location [(ft, %)]
43	76	X	0	0
44	76	X	0	0
45	76	X	0	0
46	91	X	-0.028	%50
47	91	X	-0.025	%50
48	91	X	0	0
49	91	X	0	0
50	91	X	0	0
51	21	X	-0.008	%30
52	21	X	0	0
53	21	X	0	0
54	21	X	0	0
55	21	X	0	0
56	125	X	-0.008	%50
57	125	X	0	0
58	125	X	0	0
59	125	X	0	0
60	125	X	0	0
61	24	X	-0.008	%15
62	24	X	0	0
63	24	X	0	0
64	24	X	0	0
65	24	X	0	0
66	18	X	-0.008	%25
67	18	X	0	0
68	18	X	0	0
69	18	X	0	0
70	18	X	0	0
71	127	X	-0.01	%50
72	127	X	0	0
73	127	X	0	0
74	127	X	0	0
75	127	X	0	0
76	124	X	-0.01	%50
77	124	X	0	0
78	124	X	0	0
79	124	X	0	0
80	124	X	0	0
81	33	X	-0.008	0
82	33	X	0	0
83	33	X	0	0
84	33	X	0	0
85	33	X	0	%50
86	126	X	-0.008	%50
87	126	X	0	0
88	126	X	0	0
89	126	X	0	0
90	126	X	0	0
91	36	X	-0.008	%15
92	36	X	0	0
93	36	X	0	0
94	36	X	0	0
95	36	X	0	0
96	30	X	-0.008	%25
97	30	X	0	0

Attachment: PC-2022-03 Packet (5952 : AT&T - Special Permit Application)

Member Point Loads (BLC 10 : 90 Seismic) (Continued)

	Member Label	Direction	Magnitude [k, k-ft]	Location [(ft, %)]
98	30	X	0	0
99	30	X	0	0
100	30	X	0	0
101	27	X	-0.01	%15
102	27	X	0	0
103	27	X	0	0
104	27	X	0	0
105	27	X	0	0

Member Distributed Loads (BLC 2 : 0 Wind - No Ice)

	Member Label	Direction	Start Magnitude [k/ft, F, ksf, k-ft/ft]	End Magnitude [k/ft, F, ksf, k-ft/ft]	Start Location [(ft, %)]	End Location [(ft, %)]
1	1	Z	-0.01	-0.01	0	%100
2	2	Z	-0.01	-0.01	0	%100
3	3	Z	-0.01	-0.01	0	%100
4	4	Z	-0.01	-0.01	0	%100
5	5	Z	-0.01	-0.01	0	%100
6	6	Z	-0.01	-0.01	0	%100
7	7	Z	-0.01	-0.01	0	%100
8	8	Z	-0.01	-0.01	0	%100
9	9	Z	-0.01	-0.01	0	%100
10	10	Z	-0.01	-0.01	0	%100
11	11	Z	-0.01	-0.01	0	%100
12	12	Z	-0.01	-0.01	0	%100
13	13	Z	-0.01	-0.01	0	%100
14	14	Z	-0.01	-0.01	0	%100
15	15	Z	-0.01	-0.01	0	%100
16	16	Z	-0.01	-0.01	0	%100
17	17	Z	-0.019	-0.019	0	%100
18	18	Z	-0.014	-0.014	0	%100
19	19	Z	-0.011	-0.011	0	%100
20	20	Z	-0.019	-0.019	0	%100
21	21	Z	-0.014	-0.014	0	%100
22	22	Z	-0.011	-0.011	0	%100
23	23	Z	-0.019	-0.019	0	%100
24	24	Z	-0.014	-0.014	0	%100
25	25	Z	-0.011	-0.011	0	%100
26	26	Z	-0.019	-0.019	0	%100
27	27	Z	-0.014	-0.014	0	%100
28	28	Z	-0.011	-0.011	0	%100
29	29	Z	-0.019	-0.019	0	%100
30	30	Z	-0.014	-0.014	0	%100
31	31	Z	-0.011	-0.011	0	%100
32	32	Z	-0.019	-0.019	0	%100
33	33	Z	-0.014	-0.014	0	%100
34	34	Z	-0.011	-0.011	0	%100
35	35	Z	-0.019	-0.019	0	%100
36	36	Z	-0.014	-0.014	0	%100
37	37	Z	-0.011	-0.011	0	%100
38	38	Z	-0.019	-0.019	0	%100
39	39	Z	-0.014	-0.014	0	%100
40	40	Z	-0.011	-0.011	0	%100
41	41	Z	-0.019	-0.019	0	%100
42	42	Z	-0.014	-0.014	0	%100
43	43	Z	-0.011	-0.011	0	%100
44	44	Z	-0.019	-0.019	0	%100

Attachment: PC-2022-03 Packet (5952 : AT&T - Special Permit Application)

Member Distributed Loads (BLC 2 : 0 Wind - No Ice) (Continued)

	Member Label	Direction	Start Magnitude [k/ft, F, ksf, k-ft/ft]	End Magnitude [k/ft, F, ksf, k-ft/ft]	Start Location [(ft, %)]	End Location [(ft, %)]
45	45	Z	-0.014	-0.014	0	%100
46	46	Z	-0.011	-0.011	0	%100
47	47	Z	-0.019	-0.019	0	%100
48	48	Z	-0.014	-0.014	0	%100
49	49	Z	-0.011	-0.011	0	%100
50	50	Z	-0.019	-0.019	0	%100
51	51	Z	-0.014	-0.014	0	%100
52	52	Z	-0.011	-0.011	0	%100
53	53	Z	-0.019	-0.019	0	%100
54	54	Z	-0.014	-0.014	0	%100
55	55	Z	-0.011	-0.011	0	%100
56	56	Z	-0.019	-0.019	0	%100
57	57	Z	-0.014	-0.014	0	%100
58	58	Z	-0.011	-0.011	0	%100
59	59	Z	-0.019	-0.019	0	%100
60	60	Z	-0.014	-0.014	0	%100
61	61	Z	-0.011	-0.011	0	%100
62	63	Z	-0.008	-0.008	0	%100
63	65	Z	-0.008	-0.008	0	%100
64	70	Z	-0.008	-0.008	0	%100
65	73	Z	-0.008	-0.008	0	%100
66	76	Z	-0.007	-0.007	0	%100
67	78	Z	-0.008	-0.008	0	%100
68	80	Z	-0.008	-0.008	0	%100
69	85	Z	-0.008	-0.008	0	%100
70	88	Z	-0.008	-0.008	0	%100
71	91	Z	-0.007	-0.007	0	%100
72	92	Z	-0.017	-0.017	0	%100
73	93	Z	-0.017	-0.017	0	%100
74	94	Z	-0.017	-0.017	0	%100
75	95	Z	-0.017	-0.017	0	%100
76	96	Z	-0.017	-0.017	0	%100
77	97	Z	-0.017	-0.017	0	%100
78	98	Z	-0.017	-0.017	0	%100
79	99	Z	-0.017	-0.017	0	%100
80	102	Z	-0.009	-0.009	0	%100
81	105	Z	-0.009	-0.009	0	%100
82	110	Z	-0.007	-0.007	0	%100
83	111	Z	-0.007	-0.007	0	%100
84	114	Z	-0.009	-0.009	0	%100
85	117	Z	-0.009	-0.009	0	%100
86	122	Z	-0.007	-0.007	0	%100
87	123	Z	-0.007	-0.007	0	%100

Member Distributed Loads (BLC 3 : 90 Wind - No Ice)

	Member Label	Direction	Start Magnitude [k/ft, F, ksf, k-ft/ft]	End Magnitude [k/ft, F, ksf, k-ft/ft]	Start Location [(ft, %)]	End Location [(ft, %)]
1	1	X	-0.01	-0.01	0	%100
2	2	X	-0.01	-0.01	0	%100
3	3	X	-0.01	-0.01	0	%100
4	4	X	-0.01	-0.01	0	%100
5	5	X	-0.01	-0.01	0	%100
6	6	X	-0.01	-0.01	0	%100
7	7	X	-0.01	-0.01	0	%100
8	8	X	-0.01	-0.01	0	%100
9	9	X	-0.01	-0.01	0	%100

Attachment: PC-2022-03 Packet (5952 : AT&T - Special Permit Application)

Member Distributed Loads (BLC 3 : 90 Wind - No Ice) (Continued)

	Member Label	Direction	Start Magnitude [k/ft, F, ksf, k-ft/ft]	End Magnitude [k/ft, F, ksf, k-ft/ft]	Start Location [(ft, %)]	End Location [(ft, %)]
10	10	X	-0.01	-0.01	0	%100
11	11	X	-0.01	-0.01	0	%100
12	12	X	-0.01	-0.01	0	%100
13	13	X	-0.01	-0.01	0	%100
14	14	X	-0.01	-0.01	0	%100
15	15	X	-0.01	-0.01	0	%100
16	16	X	-0.01	-0.01	0	%100
17	17	X	-0.019	-0.019	0	%100
18	18	X	-0.014	-0.014	0	%100
19	19	X	-0.011	-0.011	0	%100
20	20	X	-0.019	-0.019	0	%100
21	21	X	-0.014	-0.014	0	%100
22	22	X	-0.011	-0.011	0	%100
23	23	X	-0.019	-0.019	0	%100
24	24	X	-0.014	-0.014	0	%100
25	25	X	-0.011	-0.011	0	%100
26	26	X	-0.019	-0.019	0	%100
27	27	X	-0.014	-0.014	0	%100
28	28	X	-0.011	-0.011	0	%100
29	29	X	-0.019	-0.019	0	%100
30	30	X	-0.014	-0.014	0	%100
31	31	X	-0.011	-0.011	0	%100
32	32	X	-0.019	-0.019	0	%100
33	33	X	-0.014	-0.014	0	%100
34	34	X	-0.011	-0.011	0	%100
35	35	X	-0.019	-0.019	0	%100
36	36	X	-0.014	-0.014	0	%100
37	37	X	-0.011	-0.011	0	%100
38	38	X	-0.019	-0.019	0	%100
39	39	X	-0.014	-0.014	0	%100
40	40	X	-0.011	-0.011	0	%100
41	41	X	-0.019	-0.019	0	%100
42	42	X	-0.014	-0.014	0	%100
43	43	X	-0.011	-0.011	0	%100
44	44	X	-0.019	-0.019	0	%100
45	45	X	-0.014	-0.014	0	%100
46	46	X	-0.011	-0.011	0	%100
47	47	X	-0.019	-0.019	0	%100
48	48	X	-0.014	-0.014	0	%100
49	49	X	-0.011	-0.011	0	%100
50	50	X	-0.019	-0.019	0	%100
51	51	X	-0.014	-0.014	0	%100
52	52	X	-0.011	-0.011	0	%100
53	53	X	-0.019	-0.019	0	%100
54	54	X	-0.014	-0.014	0	%100
55	55	X	-0.011	-0.011	0	%100
56	56	X	-0.019	-0.019	0	%100
57	57	X	-0.014	-0.014	0	%100
58	58	X	-0.011	-0.011	0	%100
59	59	X	-0.019	-0.019	0	%100
60	60	X	-0.014	-0.014	0	%100
61	61	X	-0.011	-0.011	0	%100
62	63	X	-0.008	-0.008	0	%100
63	65	X	-0.008	-0.008	0	%100
64	70	X	-0.008	-0.008	0	%100

Attachment: PC-2022-03 Packet (5952 : AT&T - Special Permit Application)

Member Distributed Loads (BLC 3 : 90 Wind - No Ice) (Continued)

	Member Label	Direction	Start Magnitude [k/ft, F, ksf, k-ft/ft]	End Magnitude [k/ft, F, ksf, k-ft/ft]	Start Location [(ft, %)]	End Location [(ft, %)]
65	73	X	-0.008	-0.008	0	%100
66	76	X	-0.007	-0.007	0	%100
67	78	X	-0.008	-0.008	0	%100
68	80	X	-0.008	-0.008	0	%100
69	85	X	-0.008	-0.008	0	%100
70	88	X	-0.008	-0.008	0	%100
71	91	X	-0.007	-0.007	0	%100
72	92	X	-0.017	-0.017	0	%100
73	93	X	-0.017	-0.017	0	%100
74	94	X	-0.017	-0.017	0	%100
75	95	X	-0.017	-0.017	0	%100
76	96	X	-0.017	-0.017	0	%100
77	97	X	-0.017	-0.017	0	%100
78	98	X	-0.017	-0.017	0	%100
79	99	X	-0.017	-0.017	0	%100
80	102	X	-0.009	-0.009	0	%100
81	105	X	-0.009	-0.009	0	%100
82	110	X	-0.007	-0.007	0	%100
83	111	X	-0.007	-0.007	0	%100
84	114	X	-0.009	-0.009	0	%100
85	117	X	-0.009	-0.009	0	%100
86	122	X	-0.007	-0.007	0	%100
87	123	X	-0.007	-0.007	0	%100

Member Distributed Loads (BLC 4 : 0 Wind - Ice)

	Member Label	Direction	Start Magnitude [k/ft, F, ksf, k-ft/ft]	End Magnitude [k/ft, F, ksf, k-ft/ft]	Start Location [(ft, %)]	End Location [(ft, %)]
1	1	Z	-0.004	-0.004	0	%100
2	2	Z	-0.004	-0.004	0	%100
3	3	Z	-0.004	-0.004	0	%100
4	4	Z	-0.004	-0.004	0	%100
5	5	Z	-0.004	-0.004	0	%100
6	6	Z	-0.004	-0.004	0	%100
7	7	Z	-0.004	-0.004	0	%100
8	8	Z	-0.004	-0.004	0	%100
9	9	Z	-0.004	-0.004	0	%100
10	10	Z	-0.004	-0.004	0	%100
11	11	Z	-0.004	-0.004	0	%100
12	12	Z	-0.004	-0.004	0	%100
13	13	Z	-0.004	-0.004	0	%100
14	14	Z	-0.004	-0.004	0	%100
15	15	Z	-0.004	-0.004	0	%100
16	16	Z	-0.004	-0.004	0	%100
17	17	Z	-0.005	-0.005	0	%100
18	18	Z	-0.005	-0.005	0	%100
19	19	Z	-0.004	-0.004	0	%100
20	20	Z	-0.005	-0.005	0	%100
21	21	Z	-0.005	-0.005	0	%100
22	22	Z	-0.004	-0.004	0	%100
23	23	Z	-0.005	-0.005	0	%100
24	24	Z	-0.005	-0.005	0	%100
25	25	Z	-0.004	-0.004	0	%100
26	26	Z	-0.005	-0.005	0	%100
27	27	Z	-0.005	-0.005	0	%100
28	28	Z	-0.004	-0.004	0	%100
29	29	Z	-0.005	-0.005	0	%100

Attachment: PC-2022-03 Packet (5952 : AT&T - Special Permit Application)

Member Distributed Loads (BLC 4 : 0 Wind - Ice) (Continued)

	Member Label	Direction	Start Magnitude [k/ft, F, ksf, k-ft/ft]	End Magnitude [k/ft, F, ksf, k-ft/ft]	Start Location [(ft, %)]	End Location [(ft, %)]
30	30	Z	-0.005	-0.005	0	%100
31	31	Z	-0.004	-0.004	0	%100
32	32	Z	-0.005	-0.005	0	%100
33	33	Z	-0.005	-0.005	0	%100
34	34	Z	-0.004	-0.004	0	%100
35	35	Z	-0.005	-0.005	0	%100
36	36	Z	-0.005	-0.005	0	%100
37	37	Z	-0.004	-0.004	0	%100
38	38	Z	-0.005	-0.005	0	%100
39	39	Z	-0.005	-0.005	0	%100
40	40	Z	-0.004	-0.004	0	%100
41	41	Z	-0.005	-0.005	0	%100
42	42	Z	-0.005	-0.005	0	%100
43	43	Z	-0.004	-0.004	0	%100
44	44	Z	-0.005	-0.005	0	%100
45	45	Z	-0.005	-0.005	0	%100
46	46	Z	-0.004	-0.004	0	%100
47	47	Z	-0.005	-0.005	0	%100
48	48	Z	-0.005	-0.005	0	%100
49	49	Z	-0.004	-0.004	0	%100
50	50	Z	-0.005	-0.005	0	%100
51	51	Z	-0.005	-0.005	0	%100
52	52	Z	-0.004	-0.004	0	%100
53	53	Z	-0.005	-0.005	0	%100
54	54	Z	-0.005	-0.005	0	%100
55	55	Z	-0.004	-0.004	0	%100
56	56	Z	-0.005	-0.005	0	%100
57	57	Z	-0.005	-0.005	0	%100
58	58	Z	-0.004	-0.004	0	%100
59	59	Z	-0.005	-0.005	0	%100
60	60	Z	-0.005	-0.005	0	%100
61	61	Z	-0.004	-0.004	0	%100
62	63	Z	-0.001	-0.001	0	%100
63	65	Z	-0.001	-0.001	0	%100
64	70	Z	-0.001	-0.001	0	%100
65	73	Z	-0.001	-0.001	0	%100
66	76	Z	-0.001	-0.001	0	%100
67	78	Z	-0.001	-0.001	0	%100
68	80	Z	-0.001	-0.001	0	%100
69	85	Z	-0.001	-0.001	0	%100
70	88	Z	-0.001	-0.001	0	%100
71	91	Z	-0.001	-0.001	0	%100
72	92	Z	-0.005	-0.005	0	%100
73	93	Z	-0.005	-0.005	0	%100
74	94	Z	-0.005	-0.005	0	%100
75	95	Z	-0.005	-0.005	0	%100
76	96	Z	-0.005	-0.005	0	%100
77	97	Z	-0.005	-0.005	0	%100
78	98	Z	-0.005	-0.005	0	%100
79	99	Z	-0.005	-0.005	0	%100
80	102	Z	-0.004	-0.004	0	%100
81	105	Z	-0.004	-0.004	0	%100
82	110	Z	-0.004	-0.004	0	%100
83	111	Z	-0.004	-0.004	0	%100
84	114	Z	-0.004	-0.004	0	%100

Attachment: PC-2022-03 Packet (5952 : AT&T - Special Permit Application)

Member Distributed Loads (BLC 4 : 0 Wind - Ice) (Continued)

	Member Label	Direction	Start Magnitude [k/ft, F, ksf, k-ft/ft]	End Magnitude [k/ft, F, ksf, k-ft/ft]	Start Location [(ft, %)]	End Location [(ft, %)]
85	117	Z	-0.004	-0.004	0	%100
86	122	Z	-0.004	-0.004	0	%100
87	123	Z	-0.004	-0.004	0	%100

Member Distributed Loads (BLC 5 : 90 Wind - Ice)

	Member Label	Direction	Start Magnitude [k/ft, F, ksf, k-ft/ft]	End Magnitude [k/ft, F, ksf, k-ft/ft]	Start Location [(ft, %)]	End Location [(ft, %)]
1	1	X	-0.004	-0.004	0	%100
2	2	X	-0.004	-0.004	0	%100
3	3	X	-0.004	-0.004	0	%100
4	4	X	-0.004	-0.004	0	%100
5	5	X	-0.004	-0.004	0	%100
6	6	X	-0.004	-0.004	0	%100
7	7	X	-0.004	-0.004	0	%100
8	8	X	-0.004	-0.004	0	%100
9	9	X	-0.004	-0.004	0	%100
10	10	X	-0.004	-0.004	0	%100
11	11	X	-0.004	-0.004	0	%100
12	12	X	-0.004	-0.004	0	%100
13	13	X	-0.004	-0.004	0	%100
14	14	X	-0.004	-0.004	0	%100
15	15	X	-0.004	-0.004	0	%100
16	16	X	-0.004	-0.004	0	%100
17	17	X	-0.005	-0.005	0	%100
18	18	X	-0.005	-0.005	0	%100
19	19	X	-0.004	-0.004	0	%100
20	20	X	-0.005	-0.005	0	%100
21	21	X	-0.005	-0.005	0	%100
22	22	X	-0.004	-0.004	0	%100
23	23	X	-0.005	-0.005	0	%100
24	24	X	-0.005	-0.005	0	%100
25	25	X	-0.004	-0.004	0	%100
26	26	X	-0.005	-0.005	0	%100
27	27	X	-0.005	-0.005	0	%100
28	28	X	-0.004	-0.004	0	%100
29	29	X	-0.005	-0.005	0	%100
30	30	X	-0.005	-0.005	0	%100
31	31	X	-0.004	-0.004	0	%100
32	32	X	-0.005	-0.005	0	%100
33	33	X	-0.005	-0.005	0	%100
34	34	X	-0.004	-0.004	0	%100
35	35	X	-0.005	-0.005	0	%100
36	36	X	-0.005	-0.005	0	%100
37	37	X	-0.004	-0.004	0	%100
38	38	X	-0.005	-0.005	0	%100
39	39	X	-0.005	-0.005	0	%100
40	40	X	-0.004	-0.004	0	%100
41	41	X	-0.005	-0.005	0	%100
42	42	X	-0.005	-0.005	0	%100
43	43	X	-0.004	-0.004	0	%100
44	44	X	-0.005	-0.005	0	%100
45	45	X	-0.005	-0.005	0	%100
46	46	X	-0.004	-0.004	0	%100
47	47	X	-0.005	-0.005	0	%100
48	48	X	-0.005	-0.005	0	%100
49	49	X	-0.004	-0.004	0	%100

Attachment: PC-2022-03 Packet (5952 : AT&T - Special Permit Application)

Member Distributed Loads (BLC 5 : 90 Wind - Ice) (Continued)

	Member Label	Direction	Start Magnitude [k/ft, F, ksf, k-ft/ft]	End Magnitude [k/ft, F, ksf, k-ft/ft]	Start Location [(ft, %)]	End Location [(ft, %)]
50	50	X	-0.005	-0.005	0	%100
51	51	X	-0.005	-0.005	0	%100
52	52	X	-0.004	-0.004	0	%100
53	53	X	-0.005	-0.005	0	%100
54	54	X	-0.005	-0.005	0	%100
55	55	X	-0.004	-0.004	0	%100
56	56	X	-0.005	-0.005	0	%100
57	57	X	-0.005	-0.005	0	%100
58	58	X	-0.004	-0.004	0	%100
59	59	X	-0.005	-0.005	0	%100
60	60	X	-0.005	-0.005	0	%100
61	61	X	-0.004	-0.004	0	%100
62	63	X	-0.001	-0.001	0	%100
63	65	X	-0.001	-0.001	0	%100
64	70	X	-0.001	-0.001	0	%100
65	73	X	-0.001	-0.001	0	%100
66	76	X	-0.001	-0.001	0	%100
67	78	X	-0.001	-0.001	0	%100
68	80	X	-0.001	-0.001	0	%100
69	85	X	-0.001	-0.001	0	%100
70	88	X	-0.001	-0.001	0	%100
71	91	X	-0.001	-0.001	0	%100
72	92	X	-0.005	-0.005	0	%100
73	93	X	-0.005	-0.005	0	%100
74	94	X	-0.005	-0.005	0	%100
75	95	X	-0.005	-0.005	0	%100
76	96	X	-0.005	-0.005	0	%100
77	97	X	-0.005	-0.005	0	%100
78	98	X	-0.005	-0.005	0	%100
79	99	X	-0.005	-0.005	0	%100
80	102	X	-0.004	-0.004	0	%100
81	105	X	-0.004	-0.004	0	%100
82	110	X	-0.004	-0.004	0	%100
83	111	X	-0.004	-0.004	0	%100
84	114	X	-0.004	-0.004	0	%100
85	117	X	-0.004	-0.004	0	%100
86	122	X	-0.004	-0.004	0	%100
87	123	X	-0.004	-0.004	0	%100

Member Distributed Loads (BLC 6 : 0 Wind - Service)

	Member Label	Direction	Start Magnitude [k/ft, F, ksf, k-ft/ft]	End Magnitude [k/ft, F, ksf, k-ft/ft]	Start Location [(ft, %)]	End Location [(ft, %)]
1	1	Z	-0.0008	-0.0008	0	%100
2	2	Z	-0.0008	-0.0008	0	%100
3	3	Z	-0.0008	-0.0008	0	%100
4	4	Z	-0.0008	-0.0008	0	%100
5	5	Z	-0.0008	-0.0008	0	%100
6	6	Z	-0.0008	-0.0008	0	%100
7	7	Z	-0.0008	-0.0008	0	%100
8	8	Z	-0.0008	-0.0008	0	%100
9	9	Z	-0.0008	-0.0008	0	%100
10	10	Z	-0.0008	-0.0008	0	%100
11	11	Z	-0.0008	-0.0008	0	%100
12	12	Z	-0.0008	-0.0008	0	%100
13	13	Z	-0.0008	-0.0008	0	%100
14	14	Z	-0.0008	-0.0008	0	%100

Attachment: PC-2022-03 Packet (5952 : AT&T - Special Permit Application)

Member Distributed Loads (BLC 6 : 0 Wind - Service) (Continued)

	Member Label	Direction	Start Magnitude [k/ft, F, ksf, k-ft/ft]	End Magnitude [k/ft, F, ksf, k-ft/ft]	Start Location [(ft, %)]	End Location [(ft, %)]
15	15	Z	-0.0008	-0.0008	0	%100
16	16	Z	-0.0008	-0.0008	0	%100
17	17	Z	-0.002	-0.002	0	%100
18	18	Z	-0.001	-0.001	0	%100
19	19	Z	-0.0008	-0.0008	0	%100
20	20	Z	-0.002	-0.002	0	%100
21	21	Z	-0.001	-0.001	0	%100
22	22	Z	-0.0008	-0.0008	0	%100
23	23	Z	-0.002	-0.002	0	%100
24	24	Z	-0.001	-0.001	0	%100
25	25	Z	-0.0008	-0.0008	0	%100
26	26	Z	-0.002	-0.002	0	%100
27	27	Z	-0.001	-0.001	0	%100
28	28	Z	-0.0008	-0.0008	0	%100
29	29	Z	-0.002	-0.002	0	%100
30	30	Z	-0.001	-0.001	0	%100
31	31	Z	-0.0008	-0.0008	0	%100
32	32	Z	-0.002	-0.002	0	%100
33	33	Z	-0.001	-0.001	0	%100
34	34	Z	-0.0008	-0.0008	0	%100
35	35	Z	-0.002	-0.002	0	%100
36	36	Z	-0.001	-0.001	0	%100
37	37	Z	-0.0008	-0.0008	0	%100
38	38	Z	-0.002	-0.002	0	%100
39	39	Z	-0.001	-0.001	0	%100
40	40	Z	-0.0008	-0.0008	0	%100
41	41	Z	-0.002	-0.002	0	%100
42	42	Z	-0.001	-0.001	0	%100
43	43	Z	-0.0008	-0.0008	0	%100
44	44	Z	-0.002	-0.002	0	%100
45	45	Z	-0.001	-0.001	0	%100
46	46	Z	-0.0008	-0.0008	0	%100
47	47	Z	-0.002	-0.002	0	%100
48	48	Z	-0.001	-0.001	0	%100
49	49	Z	-0.0008	-0.0008	0	%100
50	50	Z	-0.002	-0.002	0	%100
51	51	Z	-0.001	-0.001	0	%100
52	52	Z	-0.0008	-0.0008	0	%100
53	53	Z	-0.002	-0.002	0	%100
54	54	Z	-0.001	-0.001	0	%100
55	55	Z	-0.0008	-0.0008	0	%100
56	56	Z	-0.002	-0.002	0	%100
57	57	Z	-0.001	-0.001	0	%100
58	58	Z	-0.0008	-0.0008	0	%100
59	59	Z	-0.002	-0.002	0	%100
60	60	Z	-0.001	-0.001	0	%100
61	61	Z	-0.0008	-0.0008	0	%100
62	63	Z	-0.0003	-0.0003	0	%100
63	65	Z	-0.0003	-0.0003	0	%100
64	70	Z	-0.0003	-0.0003	0	%100
65	73	Z	-0.0003	-0.0003	0	%100
66	76	Z	-0.0003	-0.0003	0	%100
67	78	Z	-0.0003	-0.0003	0	%100
68	80	Z	-0.0003	-0.0003	0	%100
69	85	Z	-0.0003	-0.0003	0	%100

Attachment: PC-2022-03 Packet (5952 : AT&T - Special Permit Application)

Member Distributed Loads (BLC 6 : 0 Wind - Service) (Continued)

	Member Label	Direction	Start Magnitude [k/ft, F, ksf, k-ft/ft]	End Magnitude [k/ft, F, ksf, k-ft/ft]	Start Location [(ft, %)]	End Location [(ft, %)]
70	88	Z	-0.0003	-0.0003	0	%100
71	91	Z	-0.0003	-0.0003	0	%100
72	92	Z	-0.001	-0.001	0	%100
73	93	Z	-0.001	-0.001	0	%100
74	94	Z	-0.001	-0.001	0	%100
75	95	Z	-0.001	-0.001	0	%100
76	96	Z	-0.001	-0.001	0	%100
77	97	Z	-0.001	-0.001	0	%100
78	98	Z	-0.001	-0.001	0	%100
79	99	Z	-0.001	-0.001	0	%100
80	102	Z	-0.0007	-0.0007	0	%100
81	105	Z	-0.0007	-0.0007	0	%100
82	110	Z	-0.0006	-0.0006	0	%100
83	111	Z	-0.0006	-0.0006	0	%100
84	114	Z	-0.0007	-0.0007	0	%100
85	117	Z	-0.0007	-0.0007	0	%100
86	122	Z	-0.0006	-0.0006	0	%100
87	123	Z	-0.0006	-0.0006	0	%100

Member Distributed Loads (BLC 7 : 90 Wind - Service)

	Member Label	Direction	Start Magnitude [k/ft, F, ksf, k-ft/ft]	End Magnitude [k/ft, F, ksf, k-ft/ft]	Start Location [(ft, %)]	End Location [(ft, %)]
1	1	X	-0.0008	-0.0008	0	%100
2	2	X	-0.0008	-0.0008	0	%100
3	3	X	-0.0008	-0.0008	0	%100
4	4	X	-0.0008	-0.0008	0	%100
5	5	X	-0.0008	-0.0008	0	%100
6	6	X	-0.0008	-0.0008	0	%100
7	7	X	-0.0008	-0.0008	0	%100
8	8	X	-0.0008	-0.0008	0	%100
9	9	X	-0.0008	-0.0008	0	%100
10	10	X	-0.0008	-0.0008	0	%100
11	11	X	-0.0008	-0.0008	0	%100
12	12	X	-0.0008	-0.0008	0	%100
13	13	X	-0.0008	-0.0008	0	%100
14	14	X	-0.0008	-0.0008	0	%100
15	15	X	-0.0008	-0.0008	0	%100
16	16	X	-0.0008	-0.0008	0	%100
17	17	X	-0.002	-0.002	0	%100
18	18	X	-0.001	-0.001	0	%100
19	19	X	-0.0008	-0.0008	0	%100
20	20	X	-0.002	-0.002	0	%100
21	21	X	-0.001	-0.001	0	%100
22	22	X	-0.0008	-0.0008	0	%100
23	23	X	-0.002	-0.002	0	%100
24	24	X	-0.001	-0.001	0	%100
25	25	X	-0.0008	-0.0008	0	%100
26	26	X	-0.002	-0.002	0	%100
27	27	X	-0.001	-0.001	0	%100
28	28	X	-0.0008	-0.0008	0	%100
29	29	X	-0.002	-0.002	0	%100
30	30	X	-0.001	-0.001	0	%100
31	31	X	-0.0008	-0.0008	0	%100
32	32	X	-0.002	-0.002	0	%100
33	33	X	-0.001	-0.001	0	%100
34	34	X	-0.0008	-0.0008	0	%100

Attachment: PC-2022-03 Packet (5952 : AT&T - Special Permit Application)

Member Distributed Loads (BLC 7 : 90 Wind - Service) (Continued)

	Member Label	Direction	Start Magnitude [k/ft, F, ksf, k-ft/ft]	End Magnitude [k/ft, F, ksf, k-ft/ft]	Start Location [(ft, %)]	End Location [(ft, %)]
35	35	X	-0.002	-0.002	0	%100
36	36	X	-0.001	-0.001	0	%100
37	37	X	-0.0008	-0.0008	0	%100
38	38	X	-0.002	-0.002	0	%100
39	39	X	-0.001	-0.001	0	%100
40	40	X	-0.0008	-0.0008	0	%100
41	41	X	-0.002	-0.002	0	%100
42	42	X	-0.001	-0.001	0	%100
43	43	X	-0.0008	-0.0008	0	%100
44	44	X	-0.002	-0.002	0	%100
45	45	X	-0.001	-0.001	0	%100
46	46	X	-0.0008	-0.0008	0	%100
47	47	X	-0.002	-0.002	0	%100
48	48	X	-0.001	-0.001	0	%100
49	49	X	-0.0008	-0.0008	0	%100
50	50	X	-0.002	-0.002	0	%100
51	51	X	-0.001	-0.001	0	%100
52	52	X	-0.0008	-0.0008	0	%100
53	53	X	-0.002	-0.002	0	%100
54	54	X	-0.001	-0.001	0	%100
55	55	X	-0.0008	-0.0008	0	%100
56	56	X	-0.002	-0.002	0	%100
57	57	X	-0.001	-0.001	0	%100
58	58	X	-0.0008	-0.0008	0	%100
59	59	X	-0.002	-0.002	0	%100
60	60	X	-0.001	-0.001	0	%100
61	61	X	-0.0008	-0.0008	0	%100
62	63	X	-0.0003	-0.0003	0	%100
63	65	X	-0.0003	-0.0003	0	%100
64	70	X	-0.0003	-0.0003	0	%100
65	73	X	-0.0003	-0.0003	0	%100
66	76	X	-0.0003	-0.0003	0	%100
67	78	X	-0.0003	-0.0003	0	%100
68	80	X	-0.0003	-0.0003	0	%100
69	85	X	-0.0003	-0.0003	0	%100
70	88	X	-0.0003	-0.0003	0	%100
71	91	X	-0.0003	-0.0003	0	%100
72	92	X	-0.001	-0.001	0	%100
73	93	X	-0.001	-0.001	0	%100
74	94	X	-0.001	-0.001	0	%100
75	95	X	-0.001	-0.001	0	%100
76	96	X	-0.001	-0.001	0	%100
77	97	X	-0.001	-0.001	0	%100
78	98	X	-0.001	-0.001	0	%100
79	99	X	-0.001	-0.001	0	%100
80	102	X	-0.0007	-0.0007	0	%100
81	105	X	-0.0007	-0.0007	0	%100
82	110	X	-0.0006	-0.0006	0	%100
83	111	X	-0.0006	-0.0006	0	%100
84	114	X	-0.0007	-0.0007	0	%100
85	117	X	-0.0007	-0.0007	0	%100
86	122	X	-0.0006	-0.0006	0	%100
87	123	X	-0.0006	-0.0006	0	%100

Attachment: PC-2022-03 Packet (5952 : AT&T - Special Permit Application)

Member Distributed Loads (BLC 8 : Ice)

	Member Label	Direction	Start Magnitude [k/ft, F, ksf, k-ft/ft]	End Magnitude [k/ft, F, ksf, k-ft/ft]	Start Location [(ft, %)]	End Location [(ft, %)]
1	1	Y	-0.01	-0.01	0	%100
2	2	Y	-0.01	-0.01	0	%100
3	3	Y	-0.01	-0.01	0	%100
4	4	Y	-0.01	-0.01	0	%100
5	5	Y	-0.01	-0.01	0	%100
6	6	Y	-0.01	-0.01	0	%100
7	7	Y	-0.01	-0.01	0	%100
8	8	Y	-0.01	-0.01	0	%100
9	9	Y	-0.01	-0.01	0	%100
10	10	Y	-0.01	-0.01	0	%100
11	11	Y	-0.01	-0.01	0	%100
12	12	Y	-0.01	-0.01	0	%100
13	13	Y	-0.01	-0.01	0	%100
14	14	Y	-0.01	-0.01	0	%100
15	15	Y	-0.01	-0.01	0	%100
16	16	Y	-0.01	-0.01	0	%100
17	17	Y	-0.012	-0.012	0	%100
18	18	Y	-0.011	-0.011	0	%100
19	19	Y	-0.01	-0.01	0	%100
20	20	Y	-0.012	-0.012	0	%100
21	21	Y	-0.011	-0.011	0	%100
22	22	Y	-0.01	-0.01	0	%100
23	23	Y	-0.012	-0.012	0	%100
24	24	Y	-0.011	-0.011	0	%100
25	25	Y	-0.01	-0.01	0	%100
26	26	Y	-0.012	-0.012	0	%100
27	27	Y	-0.011	-0.011	0	%100
28	28	Y	-0.01	-0.01	0	%100
29	29	Y	-0.012	-0.012	0	%100
30	30	Y	-0.011	-0.011	0	%100
31	31	Y	-0.01	-0.01	0	%100
32	32	Y	-0.012	-0.012	0	%100
33	33	Y	-0.011	-0.011	0	%100
34	34	Y	-0.01	-0.01	0	%100
35	35	Y	-0.012	-0.012	0	%100
36	36	Y	-0.011	-0.011	0	%100
37	37	Y	-0.01	-0.01	0	%100
38	38	Y	-0.012	-0.012	0	%100
39	39	Y	-0.011	-0.011	0	%100
40	40	Y	-0.01	-0.01	0	%100
41	41	Y	-0.012	-0.012	0	%100
42	42	Y	-0.011	-0.011	0	%100
43	43	Y	-0.01	-0.01	0	%100
44	44	Y	-0.012	-0.012	0	%100
45	45	Y	-0.011	-0.011	0	%100
46	46	Y	-0.01	-0.01	0	%100
47	47	Y	-0.012	-0.012	0	%100
48	48	Y	-0.011	-0.011	0	%100
49	49	Y	-0.01	-0.01	0	%100
50	50	Y	-0.012	-0.012	0	%100
51	51	Y	-0.011	-0.011	0	%100
52	52	Y	-0.01	-0.01	0	%100
53	53	Y	-0.012	-0.012	0	%100
54	54	Y	-0.011	-0.011	0	%100
55	55	Y	-0.01	-0.01	0	%100

Attachment: PC-2022-03 Packet (5952 : AT&T - Special Permit Application)

Member Distributed Loads (BLC 8 : Ice) (Continued)

	Member Label	Direction	Start Magnitude [k/ft, F, ksf, k-ft/ft]	End Magnitude [k/ft, F, ksf, k-ft/ft]	Start Location [(ft, %)]	End Location [(ft, %)]
56	56	Y	-0.012	-0.012	0	%100
57	57	Y	-0.011	-0.011	0	%100
58	58	Y	-0.01	-0.01	0	%100
59	59	Y	-0.012	-0.012	0	%100
60	60	Y	-0.011	-0.011	0	%100
61	61	Y	-0.01	-0.01	0	%100
62	63	Y	-0.009	-0.009	0	%100
63	65	Y	-0.009	-0.009	0	%100
64	70	Y	-0.009	-0.009	0	%100
65	73	Y	-0.009	-0.009	0	%100
66	76	Y	-0.009	-0.009	0	%100
67	78	Y	-0.009	-0.009	0	%100
68	80	Y	-0.009	-0.009	0	%100
69	85	Y	-0.009	-0.009	0	%100
70	88	Y	-0.009	-0.009	0	%100
71	91	Y	-0.009	-0.009	0	%100
72	92	Y	-0.015	-0.015	0	%100
73	93	Y	-0.015	-0.015	0	%100
74	94	Y	-0.015	-0.015	0	%100
75	95	Y	-0.015	-0.015	0	%100
76	96	Y	-0.015	-0.015	0	%100
77	97	Y	-0.015	-0.015	0	%100
78	98	Y	-0.015	-0.015	0	%100
79	99	Y	-0.015	-0.015	0	%100
80	102	Y	-0.008	-0.008	0	%100
81	105	Y	-0.008	-0.008	0	%100
82	110	Y	-0.008	-0.008	0	%100
83	111	Y	-0.008	-0.008	0	%100
84	114	Y	-0.008	-0.008	0	%100
85	117	Y	-0.008	-0.008	0	%100
86	122	Y	-0.008	-0.008	0	%100
87	123	Y	-0.008	-0.008	0	%100

Member Distributed Loads (BLC 9 : 0 Seismic)

	Member Label	Direction	Start Magnitude [k/ft, F, ksf, k-ft/ft]	End Magnitude [k/ft, F, ksf, k-ft/ft]	Start Location [(ft, %)]	End Location [(ft, %)]
1	1	Z	-0.002	-0.002	0	%100
2	2	Z	-0.002	-0.002	0	%100
3	3	Z	-0.002	-0.002	0	%100
4	4	Z	-0.002	-0.002	0	%100
5	5	Z	-0.002	-0.002	0	%100
6	6	Z	-0.002	-0.002	0	%100
7	7	Z	-0.002	-0.002	0	%100
8	8	Z	-0.002	-0.002	0	%100
9	9	Z	-0.002	-0.002	0	%100
10	10	Z	-0.002	-0.002	0	%100
11	11	Z	-0.002	-0.002	0	%100
12	12	Z	-0.002	-0.002	0	%100
13	13	Z	-0.002	-0.002	0	%100
14	14	Z	-0.002	-0.002	0	%100
15	15	Z	-0.002	-0.002	0	%100
16	16	Z	-0.002	-0.002	0	%100
17	17	Z	-0.003	-0.003	0	%100
18	18	Z	-0.002	-0.002	0	%100
19	19	Z	-0.002	-0.002	0	%100
20	20	Z	-0.003	-0.003	0	%100

Attachment: PC-2022-03 Packet (5952 : AT&T - Special Permit Application)

Member Distributed Loads (BLC 9 : 0 Seismic) (Continued)

	Member Label	Direction	Start Magnitude [k/ft, F, ksf, k-ft/ft]	End Magnitude [k/ft, F, ksf, k-ft/ft]	Start Location [(ft, %)]	End Location [(ft, %)]
21	21	Z	-0.002	-0.002	0	%100
22	22	Z	-0.002	-0.002	0	%100
23	23	Z	-0.003	-0.003	0	%100
24	24	Z	-0.002	-0.002	0	%100
25	25	Z	-0.002	-0.002	0	%100
26	26	Z	-0.003	-0.003	0	%100
27	27	Z	-0.002	-0.002	0	%100
28	28	Z	-0.002	-0.002	0	%100
29	29	Z	-0.003	-0.003	0	%100
30	30	Z	-0.002	-0.002	0	%100
31	31	Z	-0.002	-0.002	0	%100
32	32	Z	-0.003	-0.003	0	%100
33	33	Z	-0.002	-0.002	0	%100
34	34	Z	-0.002	-0.002	0	%100
35	35	Z	-0.003	-0.003	0	%100
36	36	Z	-0.002	-0.002	0	%100
37	37	Z	-0.002	-0.002	0	%100
38	38	Z	-0.003	-0.003	0	%100
39	39	Z	-0.002	-0.002	0	%100
40	40	Z	-0.002	-0.002	0	%100
41	41	Z	-0.003	-0.003	0	%100
42	42	Z	-0.002	-0.002	0	%100
43	43	Z	-0.002	-0.002	0	%100
44	44	Z	-0.003	-0.003	0	%100
45	45	Z	-0.002	-0.002	0	%100
46	46	Z	-0.002	-0.002	0	%100
47	47	Z	-0.003	-0.003	0	%100
48	48	Z	-0.002	-0.002	0	%100
49	49	Z	-0.002	-0.002	0	%100
50	50	Z	-0.003	-0.003	0	%100
51	51	Z	-0.002	-0.002	0	%100
52	52	Z	-0.002	-0.002	0	%100
53	53	Z	-0.003	-0.003	0	%100
54	54	Z	-0.002	-0.002	0	%100
55	55	Z	-0.002	-0.002	0	%100
56	56	Z	-0.003	-0.003	0	%100
57	57	Z	-0.002	-0.002	0	%100
58	58	Z	-0.002	-0.002	0	%100
59	59	Z	-0.003	-0.003	0	%100
60	60	Z	-0.002	-0.002	0	%100
61	61	Z	-0.002	-0.002	0	%100
62	63	Z	-0.002	-0.002	0	%100
63	65	Z	-0.002	-0.002	0	%100
64	70	Z	-0.002	-0.002	0	%100
65	73	Z	-0.002	-0.002	0	%100
66	76	Z	-0.002	-0.002	0	%100
67	78	Z	-0.002	-0.002	0	%100
68	80	Z	-0.002	-0.002	0	%100
69	85	Z	-0.002	-0.002	0	%100
70	88	Z	-0.002	-0.002	0	%100
71	91	Z	-0.002	-0.002	0	%100
72	92	Z	-0.003	-0.003	0	%100
73	93	Z	-0.003	-0.003	0	%100
74	94	Z	-0.003	-0.003	0	%100
75	95	Z	-0.003	-0.003	0	%100

Attachment: PC-2022-03 Packet (5952 : AT&T - Special Permit Application)

Member Distributed Loads (BLC 9 : 0 Seismic) (Continued)

	Member Label	Direction	Start Magnitude [k/ft, F, ksf, k-ft/ft]	End Magnitude [k/ft, F, ksf, k-ft/ft]	Start Location [(ft, %)]	End Location [(ft, %)]
76	96	Z	-0.003	-0.003	0	%100
77	97	Z	-0.003	-0.003	0	%100
78	98	Z	-0.003	-0.003	0	%100
79	99	Z	-0.003	-0.003	0	%100
80	102	Z	-0.0007	-0.0007	0	%100
81	105	Z	-0.0007	-0.0007	0	%100
82	110	Z	-0.0007	-0.0007	0	%100
83	111	Z	-0.0007	-0.0007	0	%100
84	114	Z	-0.0007	-0.0007	0	%100
85	117	Z	-0.0007	-0.0007	0	%100
86	122	Z	-0.0007	-0.0007	0	%100
87	123	Z	-0.0007	-0.0007	0	%100

Member Distributed Loads (BLC 10 : 90 Seismic)

	Member Label	Direction	Start Magnitude [k/ft, F, ksf, k-ft/ft]	End Magnitude [k/ft, F, ksf, k-ft/ft]	Start Location [(ft, %)]	End Location [(ft, %)]
1	1	X	-0.002	-0.002	0	%100
2	2	X	-0.002	-0.002	0	%100
3	3	X	-0.002	-0.002	0	%100
4	4	X	-0.002	-0.002	0	%100
5	5	X	-0.002	-0.002	0	%100
6	6	X	-0.002	-0.002	0	%100
7	7	X	-0.002	-0.002	0	%100
8	8	X	-0.002	-0.002	0	%100
9	9	X	-0.002	-0.002	0	%100
10	10	X	-0.002	-0.002	0	%100
11	11	X	-0.002	-0.002	0	%100
12	12	X	-0.002	-0.002	0	%100
13	13	X	-0.002	-0.002	0	%100
14	14	X	-0.002	-0.002	0	%100
15	15	X	-0.002	-0.002	0	%100
16	16	X	-0.002	-0.002	0	%100
17	17	X	-0.003	-0.003	0	%100
18	18	X	-0.002	-0.002	0	%100
19	19	X	-0.002	-0.002	0	%100
20	20	X	-0.003	-0.003	0	%100
21	21	X	-0.002	-0.002	0	%100
22	22	X	-0.002	-0.002	0	%100
23	23	X	-0.003	-0.003	0	%100
24	24	X	-0.002	-0.002	0	%100
25	25	X	-0.002	-0.002	0	%100
26	26	X	-0.003	-0.003	0	%100
27	27	X	-0.002	-0.002	0	%100
28	28	X	-0.002	-0.002	0	%100
29	29	X	-0.003	-0.003	0	%100
30	30	X	-0.002	-0.002	0	%100
31	31	X	-0.002	-0.002	0	%100
32	32	X	-0.003	-0.003	0	%100
33	33	X	-0.002	-0.002	0	%100
34	34	X	-0.002	-0.002	0	%100
35	35	X	-0.003	-0.003	0	%100
36	36	X	-0.002	-0.002	0	%100
37	37	X	-0.002	-0.002	0	%100
38	38	X	-0.003	-0.003	0	%100
39	39	X	-0.002	-0.002	0	%100
40	40	X	-0.002	-0.002	0	%100

Attachment: PC-2022-03 Packet (5952 : AT&T - Special Permit Application)

Member Distributed Loads (BLC 10 : 90 Seismic) (Continued)

	Member Label	Direction	Start Magnitude [k/ft, F, ksf, k-ft/ft]	End Magnitude [k/ft, F, ksf, k-ft/ft]	Start Location [(ft, %)]	End Location [(ft, %)]
41	41	X	-0.003	-0.003	0	%100
42	42	X	-0.002	-0.002	0	%100
43	43	X	-0.002	-0.002	0	%100
44	44	X	-0.003	-0.003	0	%100
45	45	X	-0.002	-0.002	0	%100
46	46	X	-0.002	-0.002	0	%100
47	47	X	-0.003	-0.003	0	%100
48	48	X	-0.002	-0.002	0	%100
49	49	X	-0.002	-0.002	0	%100
50	50	X	-0.003	-0.003	0	%100
51	51	X	-0.002	-0.002	0	%100
52	52	X	-0.002	-0.002	0	%100
53	53	X	-0.003	-0.003	0	%100
54	54	X	-0.002	-0.002	0	%100
55	55	X	-0.002	-0.002	0	%100
56	56	X	-0.003	-0.003	0	%100
57	57	X	-0.002	-0.002	0	%100
58	58	X	-0.002	-0.002	0	%100
59	59	X	-0.003	-0.003	0	%100
60	60	X	-0.002	-0.002	0	%100
61	61	X	-0.002	-0.002	0	%100
62	63	X	-0.002	-0.002	0	%100
63	65	X	-0.002	-0.002	0	%100
64	70	X	-0.002	-0.002	0	%100
65	73	X	-0.002	-0.002	0	%100
66	76	X	-0.002	-0.002	0	%100
67	78	X	-0.002	-0.002	0	%100
68	80	X	-0.002	-0.002	0	%100
69	85	X	-0.002	-0.002	0	%100
70	88	X	-0.002	-0.002	0	%100
71	91	X	-0.002	-0.002	0	%100
72	92	X	-0.003	-0.003	0	%100
73	93	X	-0.003	-0.003	0	%100
74	94	X	-0.003	-0.003	0	%100
75	95	X	-0.003	-0.003	0	%100
76	96	X	-0.003	-0.003	0	%100
77	97	X	-0.003	-0.003	0	%100
78	98	X	-0.003	-0.003	0	%100
79	99	X	-0.003	-0.003	0	%100
80	102	X	-0.0007	-0.0007	0	%100
81	105	X	-0.0007	-0.0007	0	%100
82	110	X	-0.0007	-0.0007	0	%100
83	111	X	-0.0007	-0.0007	0	%100
84	114	X	-0.0007	-0.0007	0	%100
85	117	X	-0.0007	-0.0007	0	%100
86	122	X	-0.0007	-0.0007	0	%100
87	123	X	-0.0007	-0.0007	0	%100

Nodal Loads and Enforced Displacements

No Data to Print...

Attachment: PC-2022-03 Packet (5952 : AT&T - Special Permit Application)

Basic Load Cases

	BLC Description	Category	Y Gravity	Point	Distributed
1	Dead	DL	-1	105	
2	0 Wind - No Ice	WLZ		105	87
3	90 Wind - No Ice	WLX		105	87
4	0 Wind - Ice	WLZ		105	87
5	90 Wind - Ice	WLX		105	87
6	0 Wind - Service	WLZ		105	87
7	90 Wind - Service	WLX		105	87
8	Ice	OL1		105	87
9	0 Seismic	ELZ		105	87
10	90 Seismic	ELX		105	87
11	Live Load a	LL			
12	Live Load b	LL			
13	Live Load c	LL			
14	Live Load d	LL			
15	Maint LL 1	LL			
16	Maint LL 2	LL			
17	Maint LL 3	LL			
18	Maint LL 4	LL			
19	Maint LL 5	LL			
20	Maint LL 6	LL			
21	Maint LL 7	LL			
22	Maint LL 8	LL			
23	Maint LL 9	LL			
24	Maint LL 10	LL			
25	Maint LL 11	LL			
26	Maint LL 12	LL			
27	Maint LL 13	LL			
28	Maint LL 14	LL			
29	Maint LL 15	LL			

Load Combinations

	Description	Solve	P-Delta	BLC	Factor	BLC	Factor	BLC	Factor	BLC	Factor
1	1.4 Dead	Yes	Y	1	1.4						
2	1.2 D + 1.0 - 0 W	Yes	Y	1	1.2	2	1				
3	1.2 D + 1.0 - 30 W	Yes	Y	1	1.2	2	0.866	3	0.5		
4	1.2 D + 1.0 - 60 W	Yes	Y	1	1.2	3	0.866	2	0.5		
5	1.2 D + 1.0 - 90 W	Yes	Y	1	1.2	3	1				
6	1.2 D + 1.0 - 120 W	Yes	Y	1	1.2	3	0.866	2	-0.5		
7	1.2 D + 1.0 - 150 W	Yes	Y	1	1.2	2	-0.866	3	0.5		
8	1.2 D + 1.0 - 180 W	Yes	Y	1	1.2	2	-1				
9	1.2 D + 1.0 - 210 W	Yes	Y	1	1.2	2	-0.866	3	-0.5		
10	1.2 D + 1.0 - 240 W	Yes	Y	1	1.2	3	-0.866	2	-0.5		
11	1.2 D + 1.0 - 270 W	Yes	Y	1	1.2	3	-1				
12	1.2 D + 1.0 - 300 W	Yes	Y	1	1.2	3	-0.866	2	0.5		
13	1.2 D + 1.0 - 330 W	Yes	Y	1	1.2	2	0.866	3	-0.5		
14	1.2 D + 1.0 - 0 W/Ice	Yes	Y	1	1.2	4	1			8	1
15	1.2 D + 1.0 - 30 W/Ice	Yes	Y	1	1.2	4	0.866	5	0.5	8	1
16	1.2 D + 1.0 - 60 W/Ice	Yes	Y	1	1.2	5	0.866	4	0.5	8	1
17	1.2 D + 1.0 - 90 W/Ice	Yes	Y	1	1.2	5	1			8	1
18	1.2 D + 1.0 - 120 W/Ice	Yes	Y	1	1.2	5	0.866	4	-0.5	8	1
19	1.2 D + 1.0 - 150 W/Ice	Yes	Y	1	1.2	4	-0.866	5	0.5	8	1
20	1.2 D + 1.0 - 180 W/Ice	Yes	Y	1	1.2	4	-1			8	1
21	1.2 D + 1.0 - 210 W/Ice	Yes	Y	1	1.2	4	-0.866	5	-0.5	8	1
22	1.2 D + 1.0 - 240 W/Ice	Yes	Y	1	1.2	5	-0.866	4	-0.5	8	1

Attachment: PC-2022-03 Packet (5952 : AT&T - Special Permit Application)

Load Combinations (Continued)

	Description	Solve	P-Delta	BLC	Factor	BLC	Factor	BLC	Factor	BLC	Factor
23	1.2 D + 1.0 - 270 W/Ice	Yes	Y	1	1.2	5	-1			8	1
24	1.2 D + 1.0 - 300 W/Ice	Yes	Y	1	1.2	5	-0.866	4	0.5	8	1
25	1.2 D + 1.0 - 330 W/Ice	Yes	Y	1	1.2	4	0.866	5	-0.5	8	1
26	1.2 D + 1.0 E - 0	Yes	Y	1	1.2	9	1				
27	1.2 D + 1.0 E - 30	Yes	Y	1	1.2	9	0.866	10	0.5		
28	1.2 D + 1.0 E - 60	Yes	Y	1	1.2	10	0.866	9	0.5		
29	1.2 D + 1.0 E - 90	Yes	Y	1	1.2	10	1				
30	1.2 D + 1.0 E - 120	Yes	Y	1	1.2	10	0.866	9	-0.5		
31	1.2 D + 1.0 E - 150	Yes	Y	1	1.2	9	-0.866	10	0.5		
32	1.2 D + 1.0 E - 180	Yes	Y	1	1.2	9	-1				
33	1.2 D + 1.0 E - 210	Yes	Y	1	1.2	9	-0.866	10	-0.5		
34	1.2 D + 1.0 E - 240	Yes	Y	1	1.2	10	-0.866	9	-0.5		
35	1.2 D + 1.0 E - 270	Yes	Y	1	1.2	10	-1				
36	1.2 D + 1.0 E - 300	Yes	Y	1	1.2	10	-0.866	9	0.5		
37	1.2 D + 1.0 E - 330	Yes	Y	1	1.2	9	0.866	10	-0.5		
38	1.2 D + 1.5 LL a + Service - 0 W	Yes	Y	1	1.2	6	1			11	1.5
39	1.2 D + 1.5 LL a + Service - 30 W	Yes	Y	1	1.2	6	0.866	7	0.5	11	1.5
40	1.2 D + 1.5 LL a + Service - 60 W	Yes	Y	1	1.2	7	0.866	6	0.5	11	1.5
41	1.2 D + 1.5 LL a + Service - 90 W	Yes	Y	1	1.2	7	1			11	1.5
42	1.2 D + 1.5 LL a + Service - 120 W	Yes	Y	1	1.2	7	0.866	6	-0.5	11	1.5
43	1.2 D + 1.5 LL a + Service - 150 W	Yes	Y	1	1.2	6	-0.866	7	0.5	11	1.5
44	1.2 D + 1.5 LL a + Service - 180 W	Yes	Y	1	1.2	6	-1			11	1.5
45	1.2 D + 1.5 LL a + Service - 210 W	Yes	Y	1	1.2	6	-0.866	7	-0.5	11	1.5
46	1.2 D + 1.5 LL a + Service - 240 W	Yes	Y	1	1.2	7	-0.866	6	-0.5	11	1.5
47	1.2 D + 1.5 LL a + Service - 270 W	Yes	Y	1	1.2	7	-1			11	1.5
48	1.2 D + 1.5 LL a + Service - 300 W	Yes	Y	1	1.2	7	-0.866	6	0.5	11	1.5
49	1.2 D + 1.5 LL a + Service - 330 W	Yes	Y	1	1.2	6	0.866	7	-0.5	11	1.5
50	1.2 D + 1.5 LL b + Service - 0 W	Yes	Y	1	1.2	6	1			12	1.5
51	1.2 D + 1.5 LL b + Service - 30 W	Yes	Y	1	1.2	6	0.866	7	0.5	12	1.5
52	1.2 D + 1.5 LL b + Service - 60 W	Yes	Y	1	1.2	7	0.866	6	0.5	12	1.5
53	1.2 D + 1.5 LL b + Service - 90 W	Yes	Y	1	1.2	7	1			12	1.5
54	1.2 D + 1.5 LL b + Service - 120 W	Yes	Y	1	1.2	7	0.866	6	-0.5	12	1.5
55	1.2 D + 1.5 LL b + Service - 150 W	Yes	Y	1	1.2	6	-0.866	7	0.5	12	1.5
56	1.2 D + 1.5 LL b + Service - 180 W	Yes	Y	1	1.2	6	-1			12	1.5
57	1.2 D + 1.5 LL b + Service - 210 W	Yes	Y	1	1.2	6	-0.866	7	-0.5	12	1.5
58	1.2 D + 1.5 LL b + Service - 240 W	Yes	Y	1	1.2	7	-0.866	6	-0.5	12	1.5
59	1.2 D + 1.5 LL b + Service - 270 W	Yes	Y	1	1.2	7	-1			12	1.5
60	1.2 D + 1.5 LL b + Service - 300 W	Yes	Y	1	1.2	7	-0.866	6	0.5	12	1.5
61	1.2 D + 1.5 LL b + Service - 330 W	Yes	Y	1	1.2	6	0.866	7	-0.5	12	1.5
62	1.2 D + 1.5 LL c + Service - 0 W	Yes	Y	1	1.2	6	1			13	1.5
63	1.2 D + 1.5 LL c + Service - 30 W	Yes	Y	1	1.2	6	0.866	7	0.5	13	1.5
64	1.2 D + 1.5 LL c + Service - 60 W	Yes	Y	1	1.2	7	0.866	6	0.5	13	1.5
65	1.2 D + 1.5 LL c + Service - 90 W	Yes	Y	1	1.2	7	1			13	1.5
66	1.2 D + 1.5 LL c + Service - 120 W	Yes	Y	1	1.2	7	0.866	6	-0.5	13	1.5
67	1.2 D + 1.5 LL c + Service - 150 W	Yes	Y	1	1.2	6	-0.866	7	0.5	13	1.5
68	1.2 D + 1.5 LL c + Service - 180 W	Yes	Y	1	1.2	6	-1			13	1.5
69	1.2 D + 1.5 LL c + Service - 210 W	Yes	Y	1	1.2	6	-0.866	7	-0.5	13	1.5
70	1.2 D + 1.5 LL c + Service - 240 W	Yes	Y	1	1.2	7	-0.866	6	-0.5	13	1.5
71	1.2 D + 1.5 LL c + Service - 270 W	Yes	Y	1	1.2	7	-1			13	1.5
72	1.2 D + 1.5 LL c + Service - 300 W	Yes	Y	1	1.2	7	-0.866	6	0.5	13	1.5
73	1.2 D + 1.5 LL c + Service - 330 W	Yes	Y	1	1.2	6	0.866	7	-0.5	13	1.5
74	1.2 D + 1.5 LL d + Service - 0 W	Yes	Y	1	1.2	6	1			14	1.5
75	1.2 D + 1.5 LL d + Service - 30 W	Yes	Y	1	1.2	6	0.866	7	0.5	14	1.5
76	1.2 D + 1.5 LL d + Service - 60 W	Yes	Y	1	1.2	7	0.866	6	0.5	14	1.5
77	1.2 D + 1.5 LL d + Service - 90 W	Yes	Y	1	1.2	7	1			14	1.5

Attachment: PC-2022-03 Packet (5952 : AT&T - Special Permit Application)

Load Combinations (Continued)

	Description	Solve	P-Delta	BLC	Factor	BLC	Factor	BLC	Factor	BLC	Factor
78	1.2 D + 1.5 LL d + Service - 120 W	Yes	Y	1	1.2	7	0.866	6	-0.5	14	1.5
79	1.2 D + 1.5 LL d + Service - 150 W	Yes	Y	1	1.2	6	-0.866	7	0.5	14	1.5
80	1.2 D + 1.5 LL d + Service - 180 W	Yes	Y	1	1.2	6	-1			14	1.5
81	1.2 D + 1.5 LL d + Service - 210 W	Yes	Y	1	1.2	6	-0.866	7	-0.5	14	1.5
82	1.2 D + 1.5 LL d + Service - 240 W	Yes	Y	1	1.2	7	-0.866	6	-0.5	14	1.5
83	1.2 D + 1.5 LL d + Service - 270 W	Yes	Y	1	1.2	7	-1			14	1.5
84	1.2 D + 1.5 LL d + Service - 300 W	Yes	Y	1	1.2	7	-0.866	6	0.5	14	1.5
85	1.2 D + 1.5 LL d + Service - 330 W	Yes	Y	1	1.2	6	0.866	7	-0.5	14	1.5
86	1.2 D + 1.5 LL Maint (1)	Yes	Y	1	1.2					15	1.5
87	1.2 D + 1.5 LL Maint (2)	Yes	Y	1	1.2					16	1.5
88	1.2 D + 1.5 LL Maint (3)	Yes	Y	1	1.2					17	1.5
89	1.2 D + 1.5 LL Maint (4)	Yes	Y	1	1.2					18	1.5
90	1.2 D + 1.5 LL Maint (5)	Yes	Y	1	1.2					19	1.5
91	1.2 D + 1.5 LL Maint (6)	Yes	Y	1	1.2					20	1.5
92	1.2 D + 1.5 LL Maint (7)	Yes	Y	1	1.2					21	1.5
93	1.2 D + 1.5 LL Maint (8)	Yes	Y	1	1.2					22	1.5
94	1.2 D + 1.5 LL Maint (9)	Yes	Y	1	1.2					23	1.5
95	1.2 D + 1.5 LL Maint (10)	Yes	Y	1	1.2					24	1.5
96	1.2 D + 1.5 LL Maint (11)	Yes	Y	1	1.2					25	1.5
97	1.2 D + 1.5 LL Maint (12)	Yes	Y	1	1.2					26	1.5
98	1.2 D + 1.5 LL Maint (13)	Yes	Y	1	1.2					27	1.5
99	1.2 D + 1.5 LL Maint (14)	Yes	Y	1	1.2					28	1.5
100	1.2 D + 1.5 LL Maint (15)	Yes	Y	1	1.2					29	1.5

Envelope Node Reactions

	Node Label		X [k]	LC	Y [k]	LC	Z [k]	LC	MX [k-ft]	LC	MY [k-ft]	LC	MZ [k-ft]	LC
1	4	max	0.116	6	0.926	3	0.369	2	0.082	12	0.007	5	0.173	11
2		min	-0.115	12	-0.828	9	-0.37	8	-0.087	6	-0.007	11	-0.179	5
3	143	max	0.378	5	0.797	8	0.587	2	0.587	13	0.006	10	0.892	11
4		min	-0.375	11	-0.54	2	-0.628	8	-0.609	7	-0.007	4	-0.922	5
5	3	max	0.18	5	0.584	25	0.529	2	0.077	13	0.017	4	0.127	11
6		min	-0.186	11	-0.089	7	-0.475	8	-0.088	7	-0.014	10	-0.138	5
7	133	max	0.593	6	0.885	18	0.723	2	0.625	13	0.029	10	1.388	11
8		min	-0.564	12	0.229	12	-0.834	8	-0.578	7	-0.036	4	-1.376	5
9	2	max	0.286	5	0.842	23	0.451	13	0.058	2	0.024	3	0.241	11
10		min	-0.329	11	0.017	4	-0.33	7	-0.068	8	-0.018	9	-0.245	5
11	131	max	0.557	6	0.611	19	0.595	2	0.414	13	0.017	9	1.294	11
12		min	-0.503	12	-0.013	13	-0.697	8	-0.361	7	-0.022	3	-1.201	5
13	17	max	0.285	5	0.698	24	0.342	13	0.054	2	0.015	3	0.16	11
14		min	-0.32	11	0.121	5	-0.253	7	-0.061	8	-0.012	9	-0.156	5
15	129	max	0.6	5	0.365	17	0.307	2	0.59	3	0.01	10	1.642	10
16		min	-0.62	10	0.007	11	-0.328	8	-0.614	9	-0.01	4	-1.513	4
17	16	max	0.462	6	1.258	20	0.716	2	0.162	4	0.015	4	0.66	10
18		min	-0.429	12	0.138	2	-0.71	8	-0.169	10	-0.018	10	-0.619	4
19	15	max	0.454	4	0.34	23	0.095	2	0.2	4	0.006	11	0.41	10
20		min	-0.47	10	0.094	8	-0.09	8	-0.198	10	-0.006	5	-0.41	4
21	14	max	0.38	5	0.343	22	0.154	2	0.175	4	0.004	12	0.22	11
22		min	-0.384	11	0.109	34	-0.154	8	-0.164	10	-0.004	6	-0.23	5
23	13	max	0.352	5	0.344	21	0.171	3	0.163	4	0.004	11	0.154	10
24		min	-0.354	11	0.105	3	-0.172	9	-0.15	10	-0.004	5	-0.161	4
25	12	max	0.332	5	0.344	20	0.199	3	0.17	3	0.004	11	0.115	10
26		min	-0.331	11	0.103	2	-0.2	9	-0.155	9	-0.004	5	-0.119	4
27	11	max	0.31	5	0.345	18	0.215	3	0.139	2	0.004	10	0.075	10
28		min	-0.308	11	0.105	13	-0.215	9	-0.123	8	-0.004	4	-0.077	4
29	10	max	0.297	5	0.34	17	0.218	3	0.164	13	0.004	10	0.058	10

Attachment: PC-2022-03 Packet (5952 : AT&T - Special Permit Application)

Envelope Node Reactions (Continued)

	Node Label		X [k]	LC	Y [k]	LC	Z [k]	LC	MX [k-ft]	LC	MY [k-ft]	LC	MZ [k-ft]	LC
30		min	-0.282	11	0.091	10	-0.21	9	-0.151	7	-0.004	4	-0.057	4
31	9	max	0.31	4	0.946	10	0.502	2	0.263	13	0.009	11	0.104	12
32		min	-0.34	10	-0.617	4	-0.522	8	-0.246	7	-0.005	5	-0.104	6
33	8	max	0.301	4	0.803	18	0.435	2	0.188	12	0.022	13	0.117	11
34		min	-0.383	10	0.058	12	-0.531	8	-0.179	6	-0.016	7	-0.124	5
35	137	max	0.461	5	0.589	14	0.647	2	1.288	13	0.017	7	0.55	12
36		min	-0.396	11	0.002	8	-0.545	8	-1.393	7	-0.023	13	-0.554	6
37	7	max	0.194	4	0.713	19	0.373	2	0.134	12	0.012	12	0.109	11
38		min	-0.252	10	0.091	13	-0.446	8	-0.136	6	-0.009	6	-0.119	5
39	6	max	0.264	5	1.196	17	0.551	3	0.236	12	0.003	5	0.258	12
40		min	-0.285	11	0.087	11	-0.498	9	-0.262	6	-0.004	11	-0.281	6
41	5	max	0.057	4	0.214	2	0.221	2	0.051	12	0.007	5	0.053	11
42		min	-0.058	10	-0.127	8	-0.217	8	-0.051	6	-0.007	11	-0.048	5
43	141	max	0.35	5	0.248	24	0.482	13	0.831	12	0.002	12	0.849	11
44		min	-0.34	11	-0.051	6	-0.526	7	-0.869	6	-0.002	6	-0.889	5
45	139	max	0.382	5	0.381	25	0.543	13	1.085	13	0.004	7	0.852	12
46		min	-0.358	11	-0.009	7	-0.552	7	-1.181	7	-0.004	13	-0.924	6
47	135	max	0.704	5	1.129	15	0.697	2	1.779	13	0.034	7	0.667	11
48		min	-0.619	11	-0.169	9	-0.62	8	-1.8	7	-0.041	13	-0.633	5
49	Totals:	max	8.202	5	12.953	21	9.913	2						
50		min	-8.202	11	4.35	3	-9.913	8						

Envelope AISC 15TH (360-16): LRFD Member Steel Code Checks

	Member	Shape	Code Check	Loc[ft]	LC	Shear Check	Loc[ft]	Dir	LC	phi*Pnc [k]	phi*Pnt [k]	phi*Mn y-y [k-ft]	phi*Mn z-z [k-ft]	Cb	Eqn
1	1	L2x2x4	0.378	0	2	0.173	3.542	y	3	16.21	30.586	0.691	1.569	1.5	H2-1
2	2	L2x2x4	0.305	0	3	0.143	3.542	z	3	16.21	30.586	0.691	1.569	1.5	H2-1
3	3	L2x2x4	0.29	3.357	4	0.122	1.734	z	8	16.21	30.586	0.691	1.561	1.447	H2-1
4	4	L2x2x4	0.139	3.357	2	0.056	3.542	z	12	16.21	30.586	0.691	1.569	1.5	H2-1
5	5	L2x2x4	0.351	3.542	6	0.064	3.542	z	9	16.21	30.586	0.691	1.569	1.5	H2-1
6	6	L2x2x4	0.207	3.542	5	0.097	3.542	y	12	16.21	30.586	0.691	1.569	1.5	H2-1
7	7	L2x2x4	0.261	3.542	6	0.169	3.542	z	13	16.21	30.586	0.691	1.569	1.5	H2-1
8	8	L2x2x4	0.301	3.542	12	0.121	1.734	z	4	16.21	30.586	0.691	1.569	1.5	H2-1
9	9	L2x2x4	0.249	3.357	4	0.059	3.542	z	4	16.21	30.586	0.691	1.569	1.5	H2-1
10	10	L2x2x4	0.293	3.357	4	0.06	3.542	z	10	16.21	30.586	0.691	1.569	1.5	H2-1
11	11	L2x2x4	0.321	3.357	5	0.059	3.542	z	5	16.21	30.586	0.691	1.569	1.5	H2-1
12	12	L2x2x4	0.331	3.357	11	0.061	3.542	z	11	16.21	30.586	0.691	1.569	1.5	H2-1
13	13	L2x2x4	0.336	3.357	11	0.061	3.542	z	11	16.21	30.586	0.691	1.569	1.5	H2-1
14	14	L2x2x4	0.419	3.542	4	0.081	3.542	z	11	16.21	30.586	0.691	1.569	1.5	H2-1
15	15	L2x2x4	0.624	3.542	10	0.156	3.542	y	10	16.21	30.586	0.691	1.569	1.5	H2-1
16	16	L2x2x4	0.244	0	2	0.118	3.542	y	3	16.21	30.586	0.691	1.569	1.5	H2-1
17	17	PL1/2x4	0.347	0	8	0.405	0	y	10	1.91	64.8	0.675	5.4	1.983	H1-1a
18	18	L2.5x2.5x4	0.586	0.306	2	0.147	0	z	4	12.571	38.556	1.114	2.306	1.5	H2-1
19	19	L2x2x4	0.244	2.937	12	0.019	2.937	z	10	6.429	30.586	0.691	1.44	1.5	H2-1
20	20	PL1/2x4	0.185	4.65	3	0.056	4.65	y	3	1.91	64.8	0.675	5.4	1.913	H1-1b
21	21	L2.5x2.5x4	0.557	4.65	2	0.078	5.874	z	3	12.571	38.556	1.114	2.306	1.5	H2-1
22	22	L2x2x4	0.23	2.937	8	0.011	2.937	y	13	6.429	30.586	0.691	1.44	1.5	H2-1
23	23	PL1/2x4	0.158	2.937	10	0.044	4.222	y	3	1.91	64.8	0.675	5.4	1.457	H1-1b
24	24	L2.5x2.5x4	0.449	4.283	3	0.055	5.874	z	3	12.571	38.556	1.114	2.306	1.5	H2-1
25	25	L2x2x4	0.298	2.08	8	0.041	2.937	y	2	6.429	30.586	0.691	1.44	1.5	H2-1
26	26	PL1/2x4	0.095	5.874	2	0.007	0	y	9	1.91	64.8	0.675	5.4	1.706	H1-1b*
27	27	L2.5x2.5x4	0.196	2.937	3	0.015	2.937	y	3	12.571	38.556	1.114	2.182	1.173	H2-1
28	28	L2x2x4	0.321	2.937	9	0.022	5.874	y	3	6.429	30.586	0.691	1.44	1.5	H2-1
29	29	PL1/2x4	0.078	5.874	11	0.008	5.874	y	6	1.91	64.8	0.675	5.4	2.203	H1-1b
30	30	L2.5x2.5x4	0.205	5.874	8	0.022	2.937	y	6	12.571	38.556	1.114	2.306	1.5	H2-1
31	31	L2x2x4	0.205	2.937	13	0.017	2.937	y	7	6.429	30.586	0.691	1.44	1.5	H2-1

Attachment: PC-2022-03 Packet (5952 : AT&T - Special Permit Application)

Envelope AISC 15TH (360-16): LRFD Member Steel Code Checks (Continued)

	Member	Shape	Code Check	Loc[ft]	LC	Shear Check	Loc[ft]	Dir	LC	phi*Pnc [k]	phi*Pnt [k]	phi*Mn y-y [k-ft]	phi*Mn z-z [k-ft]	Cb	Eqn
32	32	PL1/2x4	0.295	0.245	2	0.293	0	y	6	1.91	64.8	0.675	5.4	2.384	H1-1a
33	33	L2.5x2.5x4	0.488	0.245	13	0.149	0	z	13	12.571	38.556	1.114	2.306	1.5	H2-1
34	34	L2x2x4	0.203	2.937	3	0.011	5.874	y	9	6.429	30.586	0.691	1.44	1.5	H2-1
35	35	PL1/2x4	0.15	5.874	7	0.057	4.65	y	13	1.91	64.8	0.675	5.4	1.684	H1-1b
36	36	L2.5x2.5x4	0.396	4.589	13	0.054	5.874	z	11	12.571	38.556	1.114	2.306	1.5	H2-1
37	37	L2x2x4	0.265	2.937	3	0.011	2.937	y	2	6.429	30.586	0.691	1.44	1.5	H2-1
38	38	PL1/2x4	0.185	4.222	7	0.058	4.222	y	2	1.91	64.8	0.675	5.4	1.79	H1-1b
39	39	L2.5x2.5x4	0.432	4.222	2	0.047	2.937	z	2	12.571	38.556	1.114	2.306	1.5	H2-1
40	40	L2x2x4	0.289	2.937	4	0.04	2.937	y	9	6.429	30.586	0.691	1.44	1.5	H2-1
41	41	PL1/2x4	0.107	5.874	12	0.003	0	y	18	1.91	64.8	0.675	5.4	2.022	H1-1b
42	42	L2.5x2.5x4	0.09	0	4	0.007	5.874	y	6	12.571	38.556	1.114	2.306	1.5	H2-1
43	43	L2x2x4	0.157	5.874	11	0.006	5.874	z	7	6.429	30.586	0.691	1.44	1.5	H2-1
44	44	PL1/2x4	0.098	5.874	13	0.003	5.874	y	11	1.91	64.8	0.675	5.4	2.344	H1-1b
45	45	L2.5x2.5x4	0.102	0	5	0.007	5.874	z	11	12.571	38.556	1.114	2.306	1.5	H2-1
46	46	L2x2x4	0.196	5.874	11	0.007	0	y	5	6.429	30.586	0.691	1.44	1.5	H2-1
47	47	PL1/2x4	0.097	5.874	13	0.003	5.874	y	23	1.91	64.8	0.675	5.4	2.299	H1-1b
48	48	L2.5x2.5x4	0.107	5.874	11	0.005	5.874	z	23	12.571	38.556	1.114	2.306	1.5	H2-1
49	49	L2x2x4	0.217	5.874	11	0.006	0	y	17	6.429	30.586	0.691	1.44	1.5	H2-1
50	50	PL1/2x4	0.097	0	3	0.003	5.874	y	23	1.91	64.8	0.675	5.4	2.252	H1-1b
51	51	L2.5x2.5x4	0.105	5.874	11	0.005	0	z	17	12.571	38.556	1.114	2.306	1.5	H2-1
52	52	L2x2x4	0.227	5.874	11	0.006	0	y	17	6.429	30.586	0.691	1.44	1.5	H2-1
53	53	PL1/2x4	0.103	0	3	0.003	5.874	y	23	1.91	64.8	0.675	5.4	2.211	H1-1b
54	54	L2.5x2.5x4	0.103	5.874	3	0.006	5.874	z	11	12.571	38.556	1.114	2.306	1.5	H2-1
55	55	L2x2x4	0.23	5.874	11	0.006	5.874	y	11	6.429	30.586	0.691	1.44	1.5	H2-1
56	56	PL1/2x4	0.107	0	4	0.004	5.874	y	10	1.91	64.8	0.675	5.4	2.209	H1-1b
57	57	L2.5x2.5x4	0.122	5.874	3	0.01	5.874	z	10	12.571	38.556	1.114	2.306	1.5	H2-1
58	58	L2x2x4	0.227	5.874	11	0.01	5.874	y	10	6.429	30.586	0.691	1.44	1.5	H2-1
59	59	PL1/2x4	0.151	0	4	0.003	5.874	y	10	1.91	64.8	0.675	5.4	1.834	H1-1b
60	60	L2.5x2.5x4	0.222	5.874	3	0.017	0	y	8	12.571	38.556	1.114	2.306	1.5	H2-1
61	61	L2x2x4	0.169	5.874	12	0.009	0	z	9	6.429	30.586	0.691	1.44	1.5	H2-1
62	63	PIPE_2.0	0.336	3.229	8	0.041	6.563		7	9.837	32.13	1.872	1.872	3	H1-1b
63	65	PIPE_2.0	0.134	3.229	8	0.04	6.563		7	9.837	32.13	1.872	1.872	3	H1-1b
64	70	PIPE_2.0	0.53	3.229	8	0.056	3.333		3	9.837	32.13	1.872	1.872	2.53	H1-1b
65	73	PIPE_2.0	0.296	3.229	8	0.048	6.563		2	9.837	32.13	1.872	1.872	3	H1-1b
66	76	PIPE_2.0	0.172	2.75	2	0.044	2.75		2	26.521	32.13	1.872	1.872	2.261	H1-1b
67	78	PIPE_2.0	0.336	3.229	8	0.045	6.563		2	9.837	32.13	1.872	1.872	2.685	H1-1b
68	80	PIPE_2.0	0.134	3.229	8	0.047	6.563		2	9.837	32.13	1.872	1.872	3	H1-1b
69	85	PIPE_2.0	0.529	3.229	8	0.044	3.229		8	9.837	32.13	1.872	1.872	2.604	H1-1b
70	88	PIPE_2.0	0.296	3.229	8	0.022	6.667		8	9.837	32.13	1.872	1.872	2.65	H1-1b
71	91	PIPE_2.0	0.135	2.75	9	0.047	2.75		10	26.521	32.13	1.872	1.872	1.928	H1-1b
72	92	L4X4X4	0.376	3.542	9	0.054	3.542	y	10	46.901	62.532	3.138	6.715	1.5	H2-1
73	93	L4X4X4	0.264	3.357	7	0.088	3.542	z	3	46.901	62.532	3.138	6.715	1.5	H2-1
74	94	L4X4X4	0.316	3.357	4	0.133	3.542	y	4	46.901	62.532	3.138	6.809	1.5	H2-1
75	95	L4X4X4	0.399	3.357	12	0.153	3.542	y	13	46.901	62.532	3.138	6.809	1.5	H2-1
76	96	L4X4X4	0.272	3.357	6	0.088	3.542	y	13	46.901	62.532	3.138	6.715	1.5	H2-1
77	97	L4X4X4	0.325	3.542	6	0.036	3.542	z	13	46.901	62.532	3.138	6.715	1.5	H2-1
78	98	L4X4X4	0.241	3.542	5	0.03	3.542	z	7	46.901	62.532	3.138	6.715	1.5	H2-1
79	99	L4X4X4	0.329	3.357	8	0.092	1.734	z	8	46.901	62.532	3.138	6.715	1.5	H2-1

Envelope AISI S100-16: LRFD Member Cold Formed Steel Code Checks

	Member	Shape	Code Check	Loc[ft]	LC	Shear Check	Loc[ft]	Dir	LC	phi*Pn[k]	phi*Tn[k]	phi*Mnyy[k-ft]	phi*Mnzz[k-ft]	phi*Vny[k]	phi*Vnz[k]	Cb	Eqn
1	102	P1000_CFB	0.478	2.167	9	0.16	0.169	y	9	7.982	15.308	0.414	0.672	2.321	4.641	2.988	H1.2-1
2	105	P1000_CFB	0.506	3.081	2	0.162	3.081	y	3	7.982	15.308	0.414	0.672	2.321	4.641	2.709	H1.2-1
3	110	P1000_CFB	0.28	0.667	9	0.067	1.583	y	8	10.704	15.308	0.428	0.672	2.321	4.641	1.82	H1.1-1
4	111	P1000_CFB	0.34	0.667	9	0.183	0.667	y	9	10.704	15.308	0.425	0.672	2.321	4.641	1.758	H1.2-1

Attachment: PC-2022-03 Packet (5952 : AT&T - Special Permit Application)

Envelope AISI S100-16: LRFD Member Cold Formed Steel Code Checks (Continued)

	Member	Shape	Code Check	Loc[ft]	LC	Shear Check	Loc[ft]	Dir	LC	phi*Pn[k]	phi*Tn[k]	phi*Mnyy[k-ft]	phi*Mnzz[k-ft]	phi*Vny[k]	phi*Vnz[k]	Cb	Eqn
5	114	P1000_CFB	0.401	2.167	4	0.12	2.167	y	4	7.982	15.308	0.414	0.672	2.321	4.641	2.866	H1.2-1
6	117	P1000_CFB	0.46	3.081	10	0.148	0.169	y	3	7.982	15.308	0.414	0.672	2.321	4.641	2.743	H1.2-1
7	122	P1000_CFB	0.195	0.667	4	0.065	1.583	y	4	10.704	15.308	0.428	0.672	2.321	4.641	1.887	H1.1-1
8	123	P1000_CFB	0.272	0.667	4	0.149	0.667	y	4	10.704	15.308	0.425	0.672	2.321	4.641	1.775	H1.2-1

Attachment: PC-2022-03 Packet (5952 : AT&T - Special Permit Application)

APPENDIX B

Additional Calculations

Attachment: PC-2022-03 Packet (5952 : AT&T - Special Permit Application)

ASCE 7 Hazards Report

Address:
No Address at This Location

Standard: ASCE/SEI 7-16
Risk Category: II
Soil Class: D - Default (see Section 11.4.3)

Elevation: 1190.07 ft (NAVD 88)
Latitude: 35.549281
Longitude: -97.529208

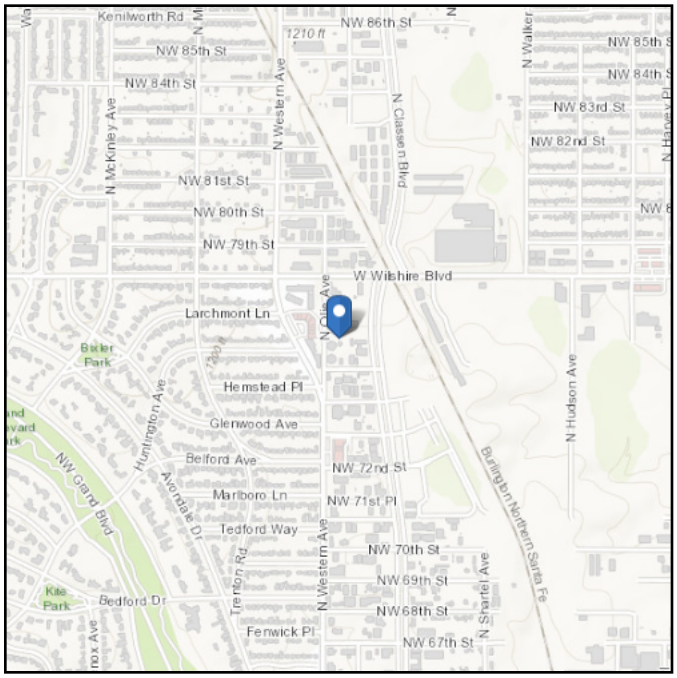

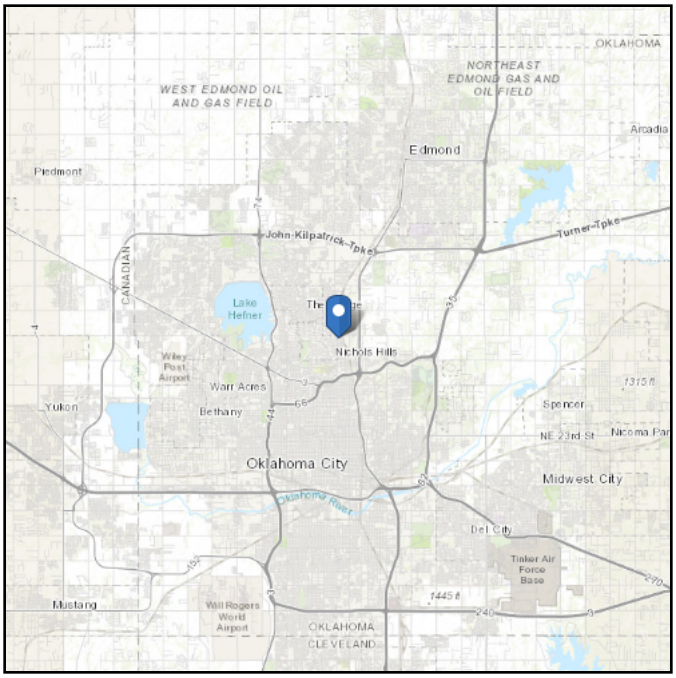

Wind

Results:

Wind Speed	109 Vmph
10-year MRI	75 Vmph
25-year MRI	83 Vmph
50-year MRI	88 Vmph
100-year MRI	94 Vmph

Data Source:	ASCE/SEI 7-16, Fig. 26.5-1B and Figs. CC.2-1–CC.2-4, and Section 26.5.2
Date Accessed:	Wed Feb 09 2022

Value provided is 3-second gust wind speeds at 33 ft above ground for Exposure C Category, based on linear interpolation between contours. Wind speeds are interpolated in accordance with the 7-16 Standard. Wind speeds correspond to approximately a 7% probability of exceedance in 50 years (annual exceedance probability = 0.00143, MRI = 700 years).

Site is not in a hurricane-prone region as defined in ASCE/SEI 7-16 Section 26.2.

Attachment: PC-2022-03 Packet (5952 : AT&T - Special Permit Application)

Seismic

Site Soil Class: D - Default (see Section 11.4.3)

Results:

S_S :	0.302	S_{D1} :	0.128
S_1 :	0.08	T_L :	12
F_a :	1.558	PGA :	0.181
F_v :	2.4	PGA_M :	0.26
S_{MS} :	0.471	F_{PGA} :	1.438
S_{M1} :	0.192	I_e :	1
S_{DS} :	0.314	C_v :	0.901

Seismic Design Category B

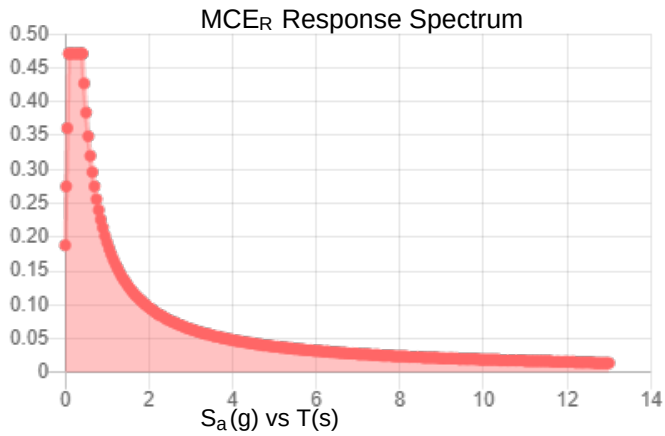

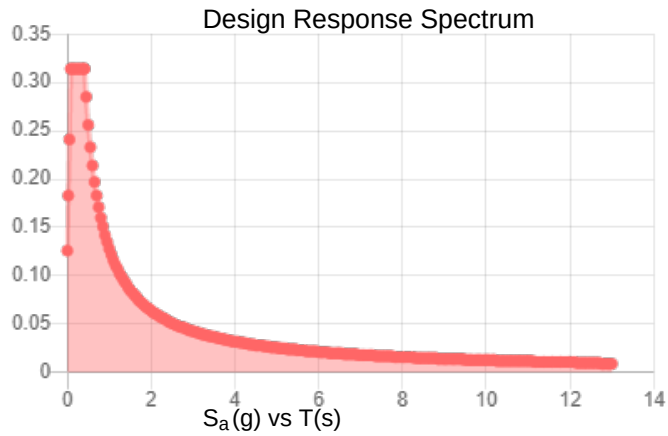

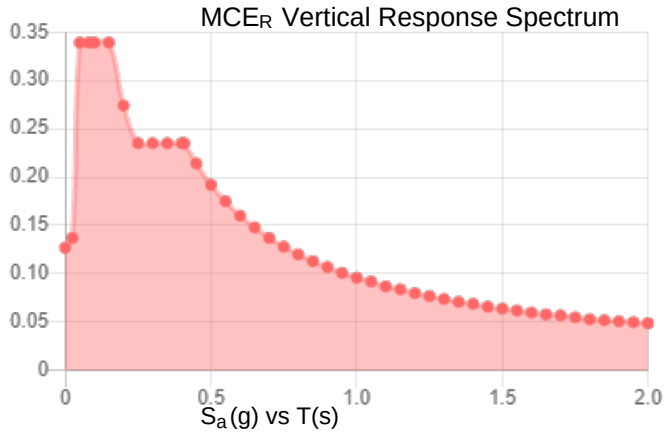

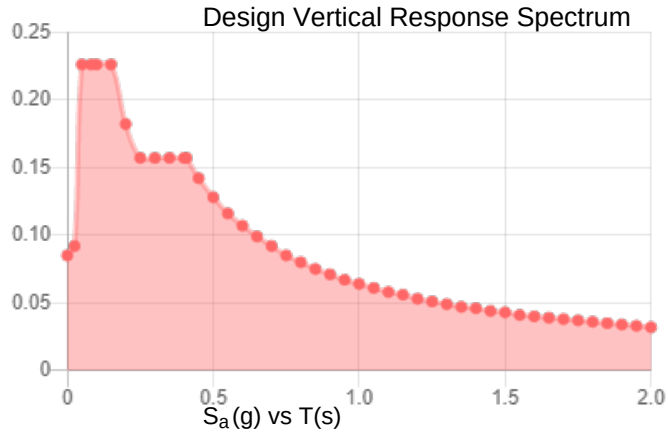

Data Accessed: **Wed Feb 09 2022**

Date Source:

USGS Seismic Design Maps based on ASCE/SEI 7-16 and ASCE/SEI 7-16 Table 1.5-2. Additional data for site-specific ground motion procedures in accordance with ASCE/SEI 7-16 Ch. 21 are available from USGS.

Attachment: PC-2022-03 Packet (5952 : AT&T - Special Permit Application)

Ice

Results:

Ice Thickness:	1.50 in.
Concurrent Temperature:	5 F
Gust Speed	40 mph
Data Source:	Standard ASCE/SEI 7-16, Figs. 10-2 through 10-8
Date Accessed:	Wed Feb 09 2022

Ice thicknesses on structures in exposed locations at elevations higher than the surrounding terrain and in valleys and gorges may exceed the mapped values.

Values provided are equivalent radial ice thicknesses due to freezing rain with concurrent 3-second gust speeds, for a 500-year mean recurrence interval, and temperatures concurrent with ice thicknesses due to freezing rain. Thicknesses for ice accretions caused by other sources shall be obtained from local meteorological studies. Ice thicknesses in exposed locations at elevations higher than the surrounding terrain and in valleys and gorges may exceed the mapped values.

The ASCE 7 Hazard Tool is provided for your convenience, for informational purposes only, and is provided “as is” and without warranties of any kind. The location data included herein has been obtained from information developed, produced, and maintained by third party providers; or has been extrapolated from maps incorporated in the ASCE 7 standard. While ASCE has made every effort to use data obtained from reliable sources or methodologies, ASCE does not make any representations or warranties as to the accuracy, completeness, reliability, currency, or quality of any data provided herein. Any third-party links provided by this Tool should not be construed as an endorsement, affiliation, relationship, or sponsorship of such third-party content by or from ASCE.

ASCE does not intend, nor should anyone interpret, the results provided by this Tool to replace the sound judgment of a competent professional, having knowledge and experience in the appropriate field(s) of practice, nor to substitute for the standard of care required of such professionals in interpreting and applying the contents of this Tool or the ASCE 7 standard.

In using this Tool, you expressly assume all risks associated with your use. Under no circumstances shall ASCE or its officers, directors, employees, members, affiliates, or agents be liable to you or any other person for any direct, indirect, special, incidental, or consequential damages arising from or related to your use of, or reliance on, the Tool or any information obtained therein. To the fullest extent permitted by law, you agree to release and hold harmless ASCE from any and all liability of any nature arising out of or resulting from any use of data provided by the ASCE 7 Hazard Tool.

Attachment: PC-2022-03 Packet (5952 : AT&T - Special Permit Application)

PROJECT	160843.001.01 - Nichols Hills	KSC
SUBJECT	Catwalk Mount Analysis	
DATE	02/24/22	PAGE OF

B+T GRP
1717 S. Boulder, Suite 300
Tulsa, OK 74119
(918) 587-4630

Tower Type		:	Other		
Ground Elevation	z_s	:	1190	ft	[ASCE7 Hazard Tool]
Tower Height		:	152.00	ft	
Mount Elevation		:	126.00	ft	
Antenna Elevation		:	129.00	ft	
Crest Height		:	0	ft	
Risk Category		:	II		[Table 2-1]
Exposure Category		:	C		[Sec. 2.6.5.1.2]
Topography Category		:	1.00		[Sec. 2.6.6.2]
Wind Velocity	V	:	109	mph	[ASCE7 Hazard Tool]
Ice wind Velocity	V_i	:	40	mph	[ASCE7 Hazard Tool]
Service Velocity	V_s	:	30	mph	[ASCE7 Hazard Tool]
Base Ice thickness	t_i	:	1.50	in	[ASCE7 Hazard Tool]
Seismic Design Cat.		:	B		[ASCE7 Hazard Tool]
	S_S	:	0.30		
	S_1	:	0.08		
	S_{DS}	:	0.31		
	S_{D1}	:	0.13		
Gust Factor	G_h	:	1.00		[Sec. 16.6]
Pressure Coefficient	K_z	:	1.34		[Sec. 2.6.5.2]
Topography Factor	K_{zt}	:	1.00		[Sec. 2.6.6]
Elevation Factor	K_e	:	0.96		[Sec. 2.6.8]
Directionality Factor	K_d	:	0.95		[Sec. 16.6]
Shielding Factor	K_a	:	0.90		[Sec. 16.6]
Design Ice Thickness	t_{iz}	:	1.72	in	[Sec. 2.6.10]
Importance Factor	I_e	:	1		[Table 2-3]
Response Coefficient	C_s	:	0.157		[Sec. 2.7.7.1]
Amplification	A_s	:	3		[Sec. 16.7]
	q_z	:	36.77	psf	

Attachment: PC-2022-03 Packet (5952 : AT&T - Special Permit Application)

PROJECT	160843.001.01 - Nichols Hills		KSC
SUBJECT	Catwalk Mount Analysis		
DATE	02/24/22	PAGE	OF

B+T GRP
1717 S. Boulder, Suite 300
Tulsa, OK 74119
(918) 587-4630

Manufacturer	Model	Qty	Aspect Ratio	C_a flat/round	EPA_N (ft^2)	EPA_T (ft^2)	$EPA_{N\text{-}Ice}$ (ft^2)	$EPA_{T\text{-}Ice}$ (ft^2)	$F_{A\ No\ Ice\ (N)}$	$F_{A\ No\ Ice\ (T)}$	$F_{A\ Ice\ (N)}$	$F_{A\ Ice\ (T)}$
Kathrein	80010799	0.5	7.16	1.41	4.99	2.26	6.18	3.37	0.18	0.08	0.03	0.02
Kathrein	80010799	0.5	7.16	1.41	4.99	2.26	6.18	3.37	0.18	0.08	0.03	0.02
Kathrein	80010799	0.5	7.16	1.41	4.99	2.26	6.18	3.37	0.18	0.08	0.03	0.02
Kathrein	80010799	0.5	7.16	1.41	4.99	2.26	6.18	3.37	0.18	0.08	0.03	0.02
ERICSSON	RRUS-32 B66	1	3.89	1.26	1.32	2.28	2.22	3.29	0.06	0.10	0.01	0.01
Ericsson	AIR6449 B77D	0.5	1.91	1.20	1.67	0.85	2.27	1.35	0.07	0.03	0.01	0.00
Ericsson	AIR6449 B77D	0.5	1.91	1.20	1.67	0.85	2.27	1.35	0.07	0.03	0.01	0.00
Ericsson	AIR6419 B77G	0.5	1.77	1.20	1.53	0.65	2.09	1.10	0.06	0.03	0.01	0.00
Ericsson	AIR6419 B77G	0.5	1.77	1.20	1.53	0.65	2.09	1.10	0.06	0.03	0.01	0.00
CCI	TPA65R-BU8D	0.5	4.57	1.29	7.96	2.98	9.40	4.27	0.29	0.11	0.05	0.02
CCI	TPA65R-BU8D	0.5	4.57	1.29	7.96	2.98	9.40	4.27	0.29	0.11	0.05	0.02
ERICSSON	RADIO 4449 B5/B12	1	1.43	1.20	1.08	1.37	1.77	2.12	0.04	0.05	0.01	0.01
ERICSSON	TME-RRUS 32 B30	1	3.89	1.26	1.32	2.28	2.22	3.29	0.06	0.10	0.01	0.01
Kathrein	80010799	0.5	7.16	1.41	4.99	2.26	6.18	3.37	0.18	0.08	0.03	0.02
Kathrein	80010799	0.5	7.16	1.41	4.99	2.26	6.18	3.37	0.18	0.08	0.03	0.02
Kathrein	80010799	0.5	7.16	1.41	4.99	2.26	6.18	3.37	0.18	0.08	0.03	0.02
Kathrein	80010799	0.5	7.16	1.41	4.99	2.26	6.18	3.37	0.18	0.08	0.03	0.02
ERICSSON	RRUS-32 B66	1	3.89	1.26	1.32	2.28	2.22	3.29	0.06	0.10	0.01	0.01

Attachment: PC-2022-03 Packet (5952 : AT&T - Special Permit Application)

PROJECT	160843.001.01 - Nichols Hills	KSC
SUBJECT	Catwalk Mount Analysis	
DATE	02/24/22	PAGE 3 OF

B+T GRP
1717 S. Boulder, Suite 300
Tulsa, OK 74119
(918) 587-4630

Manufacturer	Model	Qty	Aspect Ratio	C_a flat/round	EPA_N (ft^2)	EPA_T (ft^2)	$EPA_{N\text{-}Ice}$ (ft^2)	$EPA_{T\text{-}Ice}$ (ft^2)	$F_{A\ No\ Ice\ (N)}$	$F_{A\ No\ Ice\ (T)}$	$F_{A\ Ice\ (N)}$	$F_{A\ Ice\ (T)}$
Ericsson	AIR6449 B77D	0.5	1.91	1.20	1.67	0.85	2.27	1.35	0.07	0.03	0.01	0.00
Ericsson	AIR6449 B77D	0.5	1.91	1.20	1.67	0.85	2.27	1.35	0.07	0.03	0.01	0.00
Ericsson	AIR6419 B77G	0.5	1.77	1.20	1.53	0.65	2.09	1.10	0.06	0.03	0.01	0.00
Ericsson	AIR6419 B77G	0.5	1.77	1.20	1.53	0.65	2.09	1.10	0.06	0.03	0.01	0.00
CCI	TPA65R-BU8D	0.5	4.57	1.29	7.96	2.98	9.40	4.27	0.29	0.11	0.05	0.02
CCI	TPA65R-BU8D	0.5	4.57	1.29	7.96	2.98	9.40	4.27	0.29	0.11	0.05	0.02
ERICSSON	RADIO 4449 B5/B12	1	1.43	1.20	1.08	1.37	1.77	2.12	0.04	0.05	0.01	0.01
ERICSSON	TME-RRUS 32 B30	1	3.89	1.26	1.32	2.28	2.22	3.29	0.06	0.10	0.01	0.01
ERICSSON	TME-RRUS 4478 B14	1	2.14	1.20	0.88	1.54	1.54	2.33	0.04	0.06	0.00	0.01
ERICSSON	RRUS-32 B2	1	3.89	1.26	1.32	2.28	2.22	3.29	0.06	0.10	0.01	0.01
ERICSSON	TME-RRUS 4478 B14	1	2.14	1.20	0.88	1.54	1.54	2.33	0.04	0.06	0.00	0.01
ERICSSON	RRUS-32 B2	1	3.89	1.26	1.32	2.28	2.22	3.29	0.06	0.10	0.01	0.01
RAYCAP	DC2-48-60-0-9E	1	1.00	1.20	0.73	0.44	1.30	0.91	0.03	0.02	0.00	0.00
RAYCAP	DC2-48-60-0-9E	1	1.00	1.20	0.73	0.44	1.30	0.91	0.03	0.02	0.00	0.00

Attachment: PC-2022-03 Packet (5952 : AT&T - Special Permit Application)

PROJECT	160843.001.01 - Nichols Hills	KSC
SUBJECT	Catwalk Mount Analysis	
DATE	02/24/22	PAGE 4 OF

B+T GRP
1717 S. Boulder, Suite 300
Tulsa, OK 74119
(918) 587-4630

Manufacturer	Model	Qty	Aspect Ratio	C_a flat/round	EPA_N (ft^2)	EPA_T (ft^2)	$EPA_{N\text{-}Ice}$ (ft^2)	$EPA_{T\text{-}Ice}$ (ft^2)	$F_{A\ No\ Ice\ (N)}$	$F_{A\ No\ Ice\ (T)}$	$F_{A\ Ice\ (N)}$	$F_{A\ Ice\ (T)}$
RAYCAP	DC2-48-60-0-9E	1	1.00	1.20	0.73	0.44	1.30	0.91	0.03	0.02	0.00	0.00
RAYCAP	DC2-48-60-0-9E	1	1.00	1.20	0.73	0.44	1.30	0.91	0.03	0.02	0.00	0.00
RAYCAP	FC12-PC6-10E	1	1.05	1.20	1.75	0.75	2.59	1.38	0.07	0.03	0.01	0.00
RAYCAP	FC12-PC6-10E	1	1.05	1.20	1.75	0.75	2.59	1.38	0.07	0.03	0.01	0.00
RAYCAP	DC2-48-60-0-9E	1	1.00	1.20	0.73	0.44	1.30	0.91	0.03	0.02	0.00	0.00
RAYCAP	DC2-48-60-0-9E	1	1.00	1.20	0.73	0.44	1.30	0.91	0.03	0.02	0.00	0.00

Attachment: PC-2022-03 Packet (5952 : AT&T - Special Permit Application)

PROJECT	160843.001.01 - Nichols Hills	KSC
SUBJECT	Catwalk Mount Analysis	
DATE	02/24/22	PAGE 4 OF

B+T GRP
1717 S. Boulder, Suite 300
Tulsa, OK 74119
(918) 587-4630

Manufacturer	Model	Qty	Aspect Ratio	C_a flat/round	EPA_N (ft^2)	EPA_T (ft^2)	$EPA_{N\text{-}Ice}$ (ft^2)	$EPA_{T\text{-}Ice}$ (ft^2)	$F_{A\ No\ Ice\ (N)}$	$F_{A\ No\ Ice\ (T)}$	$F_{A\ Ice\ (N)}$	$F_{A\ Ice\ (T)}$
RAYCAP	DC2-48-60-0-9E	1	1.00	1.20	0.73	0.44	1.30	0.91	0.03	0.02	0.00	0.00
RAYCAP	DC2-48-60-0-9E	1	1.00	1.20	0.73	0.44	1.30	0.91	0.03	0.02	0.00	0.00
RAYCAP	FC12-PC6-10E	1	1.05	1.20	1.75	0.75	2.59	1.38	0.07	0.03	0.01	0.00

Attachment: PC-2022-03 Packet (5952 : AT&T - Special Permit Application)

PROJECT	**160843.001.01 - Nichols Hills, OK**				**KSC**
SUBJECT	**Catwalk Mount Analysis**				
DATE	**02/24/22**	PAGE	1	OF	1

B+T Group
1717 S. Boulder, Suite 300
Tulsa, OK 74119
(918) 587-4630

[REF: AISC 360-05]

Reactions at Bolted Connection

Tension	:	0.697	k
Vertical Shear	:	1.129	k
Horizontal Shear	:	0.704	k
Torsion	:	0.667	k.ft
Moment from Horizontal Forces	:	0.034	k.ft
Moment from Vertical Forces	:	1.779	k.ft

Bolt Parameters

Bolt Grade	:	A307	
Bolt Diameter	:	0.5	in
Nominal Bolt Area	:	0.307	in^2
Bolt spacing, Horizontal	:	6	in
Bolt spacing, Vertical	:	6	in
Bolt edge distance, plate height	:	1.5	in
Bolt edge distance, plate width	:	1.5	in
Total Number of Bolts	:	2	bolts

Summary of Forces

Shear Resultant Force	:	1.33	k
Force from Horz. Moment	:	0.06	k
Force from Vert. Moment	:	3.28	k
Shear Load / Bolt	:	0.67	k
Tension Load / Bolt	:	0.35	k
Resultant from Moments / Bolt	:	3.28	k

Bolt Checks

Nominal Tensile Stress, F_{nt}	:	45.00	ksi	[AISC Table J3.2]
Available Tensile Stress, ΦR_{nt}	:	10.36	k/bolt	[Eq. J3-1]
Unity Check, Bolt Tension	:	**35.07%**		**OKAY**
Nominal Shear Stress, F_{nv}	:	24.00	ksi	[AISC Table J3.2]
Available Shear Stress, ΦR_{nv}	:	5.53	k/bolt	[Eq. J3-1]
Unity Check, Bolt Shear	:	**18.35%**		**OKAY**
Unity Check, Combined	:	**53.41%**		**OKAY**
Available Bearing Strength, ΦR_n	:	36.70	k/bolt	
Unity Check, Bolt Bearing	:	**1.81%**		**OKAY**

Attachment: PC-2022-03 Packet (5952 : AT&T - Special Permit Application)

CITY OF NICHOLS HILLS

NOTICE OF PUBLIC HEARINGS
CITY OF NICHOLS HILLS, OKLAHOMA
CASE NO. PC-2022-04

Notice is hereby given that AT&T, represented by CRB for Nexius, has filed an application ("the Application") with the City of Nichols Hills, Oklahoma for approval of a special permit for the following described property:

> Existing water tower located at the NW corner of Westminster Place and Greystone Avenue in Nichols Hills, Oklahoma.

The zoning of this property is "R-1-60" Single Family Residential. The Application requests a special permit to replace and/or add new antennas and other equipment for AT&T, to be located on or adjacent to the water tower owned by the City of Nichols Hills, Oklahoma. The Application and supporting documentation may be inspected in the office of the City Clerk during regular business hours.

The Application will be considered at public hearings to be held by the Nichols Hills Planning Commission on Tuesday, August 2, 2022 at 5:30 p.m., and by the Nichols Hills City Council on Tuesday, August 9, 2022 at 5:30 p.m. These public hearings will be held in the Council Chambers at Nichols Hills City Hall, 6407 Avondale Drive, Nichols Hills, Oklahoma, 73116.

Any person may address the Nichols Hills Planning Commission and Nichols Hills City Council at the public hearings. Written support for or protest against the proposed special permit may be mailed or hand-delivered to the City Clerk at 6407 Avondale Drive, Nichols Hills, Oklahoma, 73116. Written support or protests must be received by the City Clerk not less than three (3) days before the public hearing.

Attachment: 1 PC-2022-04 Packet (5951 : AT&T - Special Permit Application)

The following map shows the area affected by the Application:

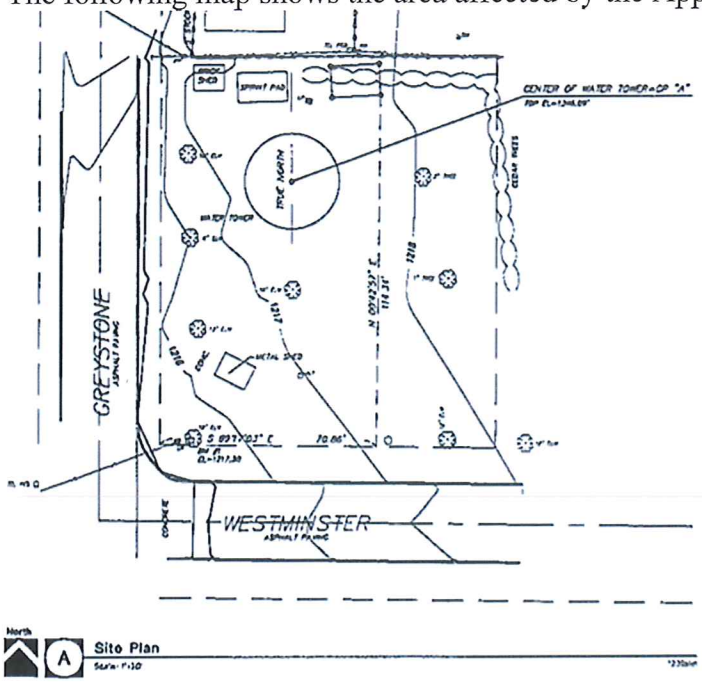

Dated this 19th day of July, 2022.

Amanda Copeland

Amanda Copeland, City Clerk
City of Nichols Hills, Oklahoma

Attachment: 1 PC-2022-04 Packet (5951 : AT&T - Special Permit Application)

CITY OF NICHOLS HILLS, OKLAHOMA

Application for Special Permit
Communication Device

Staff use only
Case # _____
Date filed _____
Fee receipt # _____

Twelve original sets and one electronic version of this completed application (including 12 original sets of the required attachments listed below) and the required fee should be submitted to the Nichols Hills City Clerk, 6407 Avondale Drive, Nichols Hills, Oklahoma 73116.

Applicant is encouraged to consult Sec. 50-127, *Communications Tower and Antenna Regulations,* of the Nichols Hills City Code when completing this Application. Note that Sec. 50-127 does not require a special permit for all communication devices.

This Application requires recommendation for approval by the Nichols Hills Planning Commission and approval of the Nichols Hills City Council.

Attach a separate sheet to provide complete answers if necessary.

Applicant's name: CRB for Nexius on behalf of AT+T

Primary contact: Lynn Ridener

Mailing address: 1900 NW Expressway Suite 800, OKC, OK 73118

Telephone number(s): 580-302-1741

Email address(es): Lynn.Ridener@branchcomm.net

This is an application to: [check all that apply]

- ☐ Construct a communication tower
- ☐ Locate an at-grade dish antenna(s) with a diameter exceeding two meters
- ☐ Locate an antenna or antenna array within a structure as an architectural element
- ☐ Install an additional antenna(s) or antenna array on an existing communications tower, sign structure, or municipal water tower
- ☐ Replace an antenna(s) or antenna array on an existing communications tower, sign structure, or municipal water tower
- ☐ Use the City's utility pole(s) (traffic signal poles, street light poles, and flag poles) associated with a distributed antenna system

Address or descriptive location of proposed device(s) [1]: 1849 East Westminister Place

The following must be attached to this Application:

1. **Proof of authority.** Proof of applicant's authority to make this Application as to the property for which the special permit is desired by attaching a copy of the applicable deed evidencing applicant's ownership, a copy of the applicable lease evidencing applicant's leasehold interest, or an affidavit regarding ownership (a form for which is attached to this Application).

2. **Survey and site map.** Certified survey and detailed site map.

[1] If metes and bounds description, please attach.

Attachment: 1 PC-2022-04 Packet (5951 : AT&T - Special Permit Application)

3. **Project plans.** Detailed and certified project plans.

4. **Structural engineer review.** If a tower or architectural element is included, certified review by a licensed structural engineer.

5. **Scope of proposed work.** A narrative of the need for the proposed device(s) and proposed scope of work in non-technical language in sufficient detail for analysis by the City's Planning Commission and City Council.

6. **List of Owners of Abutting Property.** A report developed from the current records of the Oklahoma County Assessor and/or the Oklahoma County Clerk within the last 30 days, stating the names, addresses, and contact information for the owners of property abutting the proposed site. If the report is not certified by a licensed and bonded abstractor, Applicant will be responsible for the accuracy and completeness of the information in the report.

This Application will be considered officially submitted and filed only after it is examined by the Director of Public Works and the City Clerk and found to have met the applicable requirements of Sec. 50-127 and those set out in this Application and after the fee of $750 as required by Sec. 50-327 of the Nichols Hills City Code has been paid. At that time, the City Clerk will set the Application for hearing before the Nichols Hills Planning Commission and the Nichols Hills City Council. Applicant will be advised of the date and time for those hearings. It is highly recommended that applicant attend (or have a representative attend) the hearings and be prepared to answer questions.

The above statements in this Application and all attachments to it are true and correct.

Submitted and agreed to this 18 day of July, 2022.

Signature: Lynn Ridener

Print applicant's full legal name: Lynn Ridener

Print signatory party's title if applicant is a legal entity: _____

Attachment: 1 PC-2022-04 Packet (5951 : AT&T - Special Permit Application)

Form of affidavit regarding ownership

Affidavit

STATE OF _____

COUNTY OF _____

[Full legal name], being first duly sworn, stated:

1. My name is ***[full legal name]***. My address is ***[full address]***. I am over the age of 18. I am a resident of the State of ***[state]***. I have personal knowledge of the matters stated in this Affidavit.

2. I am the applicant for a special permit for a communication device pursuant to the Nichols Hills City Code.

3. I am the current and legal owner of the property in the City of Nichols Hills with the address of ***[insert address]*** and more particularly described as:

[Insert legal description]

4. This address and legal description accurately describe the property for which the special permit for a communication device is requested.

I declare to the best of my knowledge and belief that the information in this Affidavit is true, correct, and complete.

Executed this _____ day of _____, 202___.

_____
[Full legal name]

Notary Acknowledgment

Subscribed and sworn to before me this _____ day of _____, 202___.

_____
Notary Public

My Commission Expires: _____
Comm. No. _____

This conveyance was approved on the _____ day of _____, 202___, by the City Council of the City of Nichols Hills, Oklahoma, pursuant to the Nichols Hills Subdivision Regulations as adopted by the Nichols Hills City Code.

By: _____
Printed name: _____
Title: _____

Attachment: 1 PC-2022-04 Packet (5951 : AT&T - Special Permit Application)

Market: AR/OK
Cell Site Number: OK1652
Cell Site Name: Casady Square
Fixed Asset Number: 10097837

FIRST AMENDMENT TO LEASE AGREEMENT

THIS FIRST AMENDMENT TO LEASE AGREEMENT ("**First Amendment**"), dated as of the latter of the signature dates below, is by and between The City of Nichols Hills and Nichols Hills Municipal Authority (the "Authority"), a Municipal Trust, having a mailing address of 6407 Avondale, Nichols Hills, Oklahoma 73116 (the **"Landlord"** or **"City"**) and New Cingular Wireless PCS, LLC, a Delaware limited liability company, having a mailing address of 575 Morosgo Drive NE Suite 13-F West Tower, Atlanta GA 30324 ("**Tenant**").

WHEREAS, Landlord and Tenant entered into a Lease Agreement dated June 12, 2012, whereby Landlord leased to Tenant certain Premises, therein described, that are a portion of the Property located at 1849 East Westminster Place, Nichols Hills Oklahoma 73120 ("**Agreement**"); and

WHEREAS, Tenant's use of the Premises is limited to the Antennae Facilities descried in Exhibit C to the Agreement; and

WHEREAS, City ordinances require Tenant to obtain approval of the City prior to adding any Antennae Facilities beyond those described in Exhibit C to the Agreement; and

WHEREAS, Landlord and Tenant desire to amend the Agreement to allow for the installation of additional antennas, associated cables and other communications instruments; and

WHEREAS, Landlord and Tenant desire to adjust the rent in conjunction with the modifications to the Agreement contained herein; and

WHEREAS, Landlord and Tenant desire to amend the Agreement to modify the notice section thereof; and

WHEREAS, Landlord and Tenant, in their mutual interest, wish to amend the Agreement as set forth below accordingly.

NOW THEREFORE, in consideration of the foregoing and other good and valuable consideration, the receipt and sufficiency of which are hereby acknowledged, Landlord and Tenant agree as follows:

1. **Additional Antennas.** In addition to those antennas described in Exhibit C to the Agreement, Landlord consents to the installation and operation of additional antennas, associated cables and equipment as more completely described on attached Exhibit 1-C. Landlord's execution of this

Amedment
to
original lease

Attachment: 1 PC-2022-04 Packet (5951 : AT&T - Special Permit Application)

Amendment will signify Landlord's approval of Exhibit 1-C. Exhibit 1-C hereby replaces page 1 of Exhibit C to the Agreement.

2. **Rent.** Commencing on November 1, 2014, Rent shall be increased by Four Hundred and No/100 Dollars ($400.00) per month, subject to further adjustments as provided in the Agreement.

3. **Notices.** Section 29 of the Agreement is hereby deleted in its entirety and replaced with the following:

NOTICES. All notices, requests, and demands hereunder will be given by first class certified or registered mail, return receipt requested, or by a nationally recognized overnight courier, postage prepaid, to be effective when properly sent and received, refused or returned undelivered. Notices will be addressed to the parties as follows.

If to Tenant: New Cingular Wireless PCS, LLC
By: AT&T Mobility Corporation,
Attn: Network Real Estate Administration
Re: Cell Site #:OK1652, Cell Site Name: Casady Square (OK)
FA No: 10097837
575 Morosgo Drive NE, Suite 13-F West Tower
Atlanta, GA 30324

With the required copy of legal notice sent to Tenant at the address above, a copy to the Legal Department: New Cingular Wireless PCS, LLC
Attn: Legal Department,
Re: Cell Site #:OK1652, Cell Site Name: Casady Square (OK)
FA No: 10097837
208 S. Akard Street
Dallas, TX 75202-4206

A copy sent to the Legal Department is an administrative step which alone does not constitute legal notice.

If to Landlord: City Manager
6407 Avondale Dr.
Nichols Hills, OK 73116

With the required copy of legal notice sent to Landlord at the address above, a copy to the Legal Department: Kendall Parrish
Ron Comingdeer & Associates
6011 N. Robinson
Oklahoma City, OK 73118

Either party hereto may change the place for the giving of notice to it by thirty (30) days prior written notice to the other as provided herein.

Attachment: 1 PC-2022-04 Packet (5951 : AT&T - Special Permit Application)

5. **Other Terms and Conditions Remain.** In the event of any inconsistencies between the Agreement and this First Amendment, the terms of this First Amendment shall control. Except as expressly set forth in this First Amendment, the Agreement otherwise is unmodified and remains in full force and effect. Each reference in the Agreement to itself shall be deemed also to refer to this First Amendment.

6. **Capitalized Terms.** All capitalized terms used but not defined herein shall have the same meanings as defined in the Agreement.

IN WITNESS WHEREOF, the parties have caused their properly authorized representatives to execute and seal this First Amendment on the dates set forth below.

"LANDLORD"
City of Nichols Hills
By: Sody Clements
Name: Sody Clements
Title: Mayor
Date: October 14, 2014

Nichols Hills Municipal Authority
By: Sody Clements
Name: Sody Clements
Title: Chairman
Date: November 12, 2014

"TENANT"
New Cingular Wireless PCS, LLC
By: AT&T Mobility Corporation
Its: Manager
By: B. Callicoat
Name: Brian Callicoat
Title: Area Manager, Real Estate AR/OK
Date: 11-20-14

Attachment: 1 PC-2022-04 Packet (5951 : AT&T - Special Permit Application)

TENANT ACKNOWLEDGEMENT

STATE OF Oklahoma)
)ss:
COUNTY OF Oklahoma)

On the 20 day of November, 2014 before me personally appeared Brian Callicoat, and acknowledged under oath that he is the Area Manager AR/OK of New Cingular Wireless PCS LLC, the limited liability company named in the attached instrument, and as such was authorized to execute this instrument on behalf of the limited liability company.

NICOLE A REED
Notary Public, State of Oklahoma
Commission # 14002417
My Commission Expires March 18, 2018

Notary Public: Nicole A Reed
My Commission Expires: 3-18-18

LANDLORD ACKNOWLEDGEMENT

STATE OF Oklahoma)
) ss:
COUNTY OF Oklahoma)

BE IT REMEMBERED, that on this 12 day of Nov, 2014 before me, the subscriber, a person authorized to take oaths in the State of Oklahoma, personally appeared Jody Clements who, being duly sworn on his/her/their oath, deposed and made proof to my satisfaction that he/she/they is/are the person(s) named in the within instrument; and I, having first made known to him/her/them the contents thereof, he/she/they did acknowledge that he/she/they signed, sealed and delivered the same as his/her/their voluntary act and deed for the purposes therein contained.

SYDNEY J MYERS NOTARY PUBLIC # 07005721 EXP. 06/25/15 STATE OF OKLAHOMA

Notary Public: Sydney J Myers 07005721
My Commission Expires: 6/25/15

STATE OF Oklahoma)
) ss:
COUNTY OF Oklahoma)

BE IT REMEMBERED, that on this 12 day of Nov, 2014 before me, the subscriber, a person authorized to take oaths in the State of Oklahoma, personally appeared Jody Clements who, being duly sworn on his/her/their oath, deposed and made proof to my satisfaction that he/she/they is/are the person(s) named in the within instrument; and I, having first made known to him/her/them the contents thereof, he/she/they did acknowledge that he/she/they signed, sealed and delivered the same as his/her/their voluntary act and deed for the purposes therein contained.

SYDNEY J MYERS NOTARY PUBLIC # 07005721 EXP. 06/25/15 STATE OF OKLAHOMA

Notary Public: Sydney J Myers 07005721
My Commission Expires: 6/25/15

Attachment: 1 PC-2022-04 Packet (5951 : AT&T - Special Permit Application)

EXHIBIT 1-C

Description of Antenna Facilities

9 antenna
3 Tower Mounted Amplifiers
9 Remote Radio Units
2 Surge Suppressors
6 runs of 1-5/8" Coax
4 runs of ¾" Power
2 runs of ½" Fiber
1 run of 3/8" Control Cable
All installed on a new pipe mount placed on the neck of the Water Tower

Plus all ground equipment that will be kept within Tenant's 12' x 20' lease area adjacent to the Water Tower.

Attachment: 1 PC-2022-04 Packet (5951 : AT&T - Special Permit Application)

Notes:

1. THIS EXHIBIT MAY BE REPLACED BY A LAND SURVEY AND/OR CONSTRUCTION DRAWINGS OF THE PREMISES ONCE RECEIVED BY TENANT.
2. ANY SETBACK OF THE PREMISES FROM THE PROPERTY'S BOUNDARIES SHALL BE THE DISTANCE REQUIRED BY THE APPLICABLE GOVERNMENTAL AUTHORITIES.
3. WIDTH OF ACCESS ROAD SHALL BE THE WIDTH REQUIRED BY THE APPLICABLE GOVERNMENTAL AUTHORITIES, INCLUDING POLICE AND FIRE DEPARTMENTS.
4. THE TYPE, NUMBER AND MOUNTING POSITIONS AND LOCATIONS OF ANTENNAS AND TRANSMISSION LINES ARE ILLUSTRATIVE ONLY. ACTUAL TYPES, NUMBERS AND MOUNTING POSITIONS MAY VARY FROM WHAT IS SHOWN ABOVE.

Cell Site No / Name: OK1652 / Casady Square (OK)
FA No.: 10097837
Site Address: 1849 East Westminster Place, Nichols Hills, OK

LEASE AGREEMENT

THIS LEASE entered into as of this 12 day of June 2012, by and between The City of Nichols Hills and Nichols Hills Municipal Authority (the "Authority"), a Municipal Trust having their principal offices at 6407 Avondale, Nichols Hills, Oklahoma 73116 (the "Landlord" or "City"), and New Cingular Wireless PCS, LLC, a Delaware limited liability company, having a mailing address at 12555 Cingular Way, Suite 1300, Alpharetta, GA 30004 (the "Tenant").

Recitals

A. Pursuant to that certain Trust Indenture dated December 29, 1987 between the City of Nichols Hills and the Authority, the Authority has the right to own, finance and operate sanitary sewer and water systems pursuant to the terms therein.

B. Landlord is the owner in fee simple of a parcel of land located at 1849 East Westminster Place in the City of Nichols Hills, Oklahoma County, State of Oklahoma, whose legal description is set forth on the attached Exhibit A (the "Owned Premises") and on which there is located a water tower owned by the Authority ("Water Tower").

C. Tenant desires to lease a portion of the Owned Premises consisting of approximately 240 square feet (the "Leased Premises") together with certain positions on the space on the Water Tower described below and a right-of-way thereto for the installation and operation of certain antennae facilities, which include directional antennae, connecting cables and appurtenances (collectively, "Antennae Facilities") for use in connection with Tenant's communications business. The description and location of the Leased Premises and the Antennae Facilities are more specifically described in Exhibits B and C attached hereto and made a part hereof.

D. Accordingly, the parties are entering into this Lease on the terms and conditions set forth below.

Agreement

In consideration of their mutual covenants, the parties agree as follows:

1. Leased Premises. Landlord leases to Tenant and Tenant leases from Landlord a portion of the Owned Premises, consisting of Leased Premises, as shown on the Site Plan attached as Exhibit B and described more fully below, and certain space on the Water Tower for the purpose of installing, maintaining, repairing, replacing and operating Tenant's Antennae Facilities as described more fully on the attached Exhibit C. Tenant may not add additional equipment and/or antennae from that shown on Exhibit C without the prior written approval of the Landlord.

Landlord reserves the right to require Tenant to relocate its facilities to another location on the Water Tower, provided that Tenant's use of the Leased Premises is not adversely impacted by any such relocation. Tenant shall complete the relocation of its facilities at Tenant's expense and within a reasonable time after written notice from Landlord.

ORIGINAL LEASE

Attachment: 1 PC-2022-04 Packet (5951 : AT&T - Special Permit Application)

Cell Site No / Name : OK1652 / Casady Square (OK)
FA No.: 10097837
Site Address: 1849 East Westminster Place, Nichols Hills, OK

Landlord grants to Tenant the non-exclusive right and easement during the term of this Lease for ingress and egress on foot or by motor vehicle, including trucks, and for the installation and maintenance of utility wires, cable conduits and pipes over, under, or along the twenty foot (20') right of way extending from the nearest public right of way, which is known as Greystone Avenue to the Leased Premises, as such right of way is shown on Exhibit B hereto. Tenant shall have the right to install utilities, at Tenant's expense, and to remove present utilities on the Leased Premises (including but not limited to the installation of emergency power generators). In the event any public utility is unable or unwilling to use the aforementioned right of way, Landlord hereby agrees to grant an additional right of way to Tenant at no additional cost to Tenant.

2. Relocation. Notwithstanding any provision in this Lease to the contrary, Landlord shall have the right, at any time (and from time to time) during the term of this Lease, to relocate the Water Tower at Landlord's expense. Landlord shall provide Tenant ninety (90) days advance notice of its intent to relocate the Water Tower.

3. Term.

a. This Lease shall commence on June 1, 2012 (the "Commencement Date") and end on April 30, 2017 (the "Initial Term"). Upon expiration of the Initial Term, this Lease may be renewed for two (2) additional terms of five (5) years each (each a "Renewal Term"), unless Tenant provides Landlord notice of intention not to renew not less than ninety (90) days prior to the expiration of the then-current Initial Term or Renewal Term. Notwithstanding the foregoing, Landlord may terminate this Lease at any time upon twelve (12) months prior written notice to Tenant.

b. Landlord may terminate this Lease at any time following the adoption by the State or Federal government of a law, rule, regulation or decision to the effect that due (in whole or in part) to a landlord having entered into a lease such as this one, the landlord is required to allow additional antennas or towers (of any sort or description) on its property. In addition to the foregoing right to terminate this Lease, Landlord has the right, without any further liability, to terminate all of Tenant's rights to the Premises upon not less than one hundred eighty (180) days prior written notice to Tenant if:

(1) Landlord is prohibited by any governmental entity from continued use of the Owned Premises during the term of this Lease;

(2) Landlord's right to control or occupy the Owned Premises is terminated due to causes beyond its control;

(3) After May 1, 2017, Landlord determines that the Leased Premises is needed for public purposes and no other location will reasonably fulfill such a need.

4. Rent.

a. Tenant shall pay Landlord as annual rent for the Leased Premises the sum of Thirty-Three Thousand Seven Hundred Seventy and 40/100 Dollars ($33,770.40) ("Base Rent"). Tenant shall pay Landlord Base Rent for the first year on the Commencement Date of

Attachment: 1 PC-2022-04 Packet (5951 : AT&T - Special Permit Application)

this Lease. Thereafter, Tenant shall pay Landlord Base Rent annually in advance on each anniversary of the Commencement Date. Base Rent shall be increased annually as described hereafter.

b. Tenant shall pay Landlord a late payment charge equal to five percent (5%) of the late payment for any payment not paid when due. Any amounts not paid when due shall bear interest until paid at the lesser of the rate of three percent (3%) per month or the highest rate permitted by law.

c. In addition, upon execution of this Lease by Tenant, Tenant shall reimburse Landlord for its reasonable costs and expenses, including legal fees, incurred by Landlord in connection with the negotiation and preparation of this Lease not to exceed $1,500.00.

d. The Base Rent shall be increased annually effective as of each anniversary of the Commencement Date by three percent (3.0%).

e. If this Lease is terminated at a time other than on the last day of the month, Rent shall be prorated as of the date of termination and in the event of termination for any reason other than Tenant's default, all prepaid Rents shall be refunded to the Tenant.

f. Base Rent and all other consideration to be paid or provided by Tenant to Landlord shall constitute "Rent" hereunder and shall be paid or provided without offset.

5. Intentionally Left Blank.

6. Use of Leased Premises.

a. Tenant shall use the Leased Premises for the installation, operation, repair, replacement and maintenance of commercial mobile radio service, which include a concrete pad approximately twelve feet by twenty feet (12' x 20') in size and a prefabricated equipment shelter not to exceed twelve feet by twenty feet (12' x 20') to be located on such concrete pad for the purpose of installing, maintaining and operating communications equipment. Tenant shall use the Water Tower for the installation, operation and maintenance of Antennae Facilities that are "personal wireless service facilities" as such term is defined in §704 of the Federal Telecommunications Act of 1996, Pub. L. No. 104-104, 110 Stat. 56 (1996), partially codified at 47 U.S.C. § 332(c)(7)(C)(2), and for no other purpose. Landlord may permit others to use other portions of the Water Tower. Pursuant to the preceding Tenant shall install and operate its Antennae Facilities in the manner and of the type described in Exhibit C hereto.

b. Tenant shall, at its expense, comply with all present and future federal, state, and local laws, ordinances, rules and regulations (including laws and ordinances relating to health, radio frequency emissions, other radiation and safety) in connection with the use, operation, maintenance, construction and/or installation of the Antennae Facilities and/or the Leased Premises. Landlord agrees to reasonably cooperate with Tenant in obtaining, at Tenant's expense (including reimbursement of Landlord's reasonable attorney and administrative fees), any federal licenses and permits required for or substantially required by Tenant's use of the Leased Premises.

Attachment: 1 PC-2022-04 Packet (5951 : AT&T - Special Permit Application)

Cell Site No / Name : OK1652 / Casady Square (OK)
FA No.: 10097837
Site Address: 1849 East Westminster Place, Nichols Hills, OK

c. Removal.

(1) The Tenant shall remove the Antennae Facilities from the Leased Premises within thirty (30) days after termination of the Lease. Such removal shall be done in a workmanlike and careful manner and without interference or damage to any other equipment, structures or operations on the Leased Premises, including use of the Leased Premises by Landlord or any of Landlord's assignees or lessees. If, however, Tenant requests permission not to remove all or a portion of the improvements, and Landlord consents to such non-removal, title to the affected improvements shall thereupon transfer to Landlord and the same thereafter shall be the sole and entire property of Landlord, and Tenant shall be relieved of its duty to otherwise remove same.

(2) Upon removal of the improvements (or portions thereof) as provided above in subpart (1), Tenant shall restore the affected area of the Leased Premises to the reasonable satisfaction of Landlord.

(3) All costs and expenses for the removal and restoration to be performed by Tenant pursuant to subparts (1) and (2) above shall be borne by Tenant, and Tenant shall hold Landlord harmless from any portion thereof.

7. Construction Standards. Landlord reserves the right to require Tenant to paint the Antennae Facilities in a manner consistent with the color of the Water Tower or to otherwise shield the Antennae Facilities from view.

8. Intentionally Omitted.

9. Equipment Upgrade. Tenant may update or replace the Antennae Facilities from time to time upon prior written notice to Landlord, provided that the replacement facilities are not greater in number or size than the existing facilities and that any change in their location on the Water Tower is approved in writing by Landlord. Tenant shall submit to Landlord a detailed proposal for any change in location for replacement facilities and any supplemental materials as may be requested, for Landlord's evaluation and approval.

10. Maintenance.

a. Tenant shall, at its own expense, maintain the Leased Premises and any equipment on or attached to the Leased Premises in a safe condition, in good repair and in a manner suitable to Landlord so as not to conflict with the use of the Owned Premises or other leasing of space on the Water Tower by Landlord. Tenant shall not interfere with the use of the Water Tower, the Owned Premises, related facilities or other equipment of other tenants.

b. Tenant shall have sole responsibility for the maintenance, repair, and security of its equipment, personal property, Antennae Facilities, and leasehold improvements, and shall keep the same in good repair and condition during the Lease term.

c. Tenant shall keep the Leased Premises free of debris and anything of a dangerous, noxious or offensive nature or which would create a hazard or undue vibration, heat, noise or interference.

Attachment: 1 PC-2022-04 Packet (5951 : AT&T - Special Permit Application)

d. In the event the Landlord or any other tenant undertakes painting, construction or other alterations on the Water Tower, Tenant shall take reasonable measures at Tenant's cost to cover Tenant's equipment, personal property or Antennae Facilities and protect such from paint and debris fallout which may occur during the painting, construction or alteration process.

11. Leased Premises Access,

a. Tenant shall have access to the Leased Premises by means of the access easement described on Exhibit B attached hereto, subject to notice requirements to Landlord in 11 (b) below.

b. Tenant shall have reasonable access to the Leased Premises in order to install, operate, and maintain its Antennae Facilities. Tenant shall provide Landlord twenty-four (24) hours advance notice, except in an emergency by contacting the City Manager at (405) 843-6637 or Public Works at (405) 843-5222.

c. Landlord shall be allowed and granted access to the Leased Premises at reasonable times to examine and inspect the Leased Premises for safety reasons or to ensure that the Tenant's covenants are being met.

12. Utilities. Tenant shall, at its expense, separately meter charges for the consumption of electricity and other utilities associated with its use of the Leased Premises and the Antennae Facilities and shall timely pay all costs associated therewith.

13. License Fees. Tenant shall pay, as they become due and payable, all governmental fees, charges and taxes levied as a result of Tenant's use of the Leased Premises. Tenant shall pay all governmental fees, charges and taxes required for licenses and/or permits required for Tenant's use of the Leased Premises.

14. Approvals: Compliance with Laws. Tenant's use of the Leased Premises is contingent upon its obtaining all certificates, permits, zoning, and other approvals that may be required by any federal, state or local authority. Tenant shall erect, maintain and operate its Antennae Facilities in accordance with standards, statutes, ordinances, rules and regulations now in effect or that may be issued thereafter by the Federal Communications Commission or any other governing bodies. Subject to the foregoing duty of Tenant, Landlord shall have sole responsibility for the maintenance, repair, and security of the Owned Premises, shall keep the same in good repair and condition during the Lease term and shall comply with all federal, state and local laws, orders, rules and regulations relating to Landlord's ownership and use of the Owned Premises, the Water Tower and other improvements on the Owned Premises.

15. Interference.

a. Tenant's installation, operation, and maintenance of its Antennae Facilities shall not damage or interfere in any way with Landlord's operations or related repair and maintenance activities or with such activities of other tenants. Tenant agrees to cease all such actions which materially interfere with Landlord's use of the Water Tower or the Owned Premises immediately upon actual notice of such interference, provided however, in such case, Tenant shall have the right to terminate the Lease. Landlord, at all times during this Lease, reserves the

Attachment: 1 PC-2022-04 Packet (5951 : AT&T - Special Permit Application)

right to take any action it deems necessary, in its sole discretion, to repair, maintain, alter or improve the Leased Premises in connection with its operations as may be necessary, including leasing parts of the Water Tower to others.

b. Before Tenant replaces any Antennae Facilities, Landlord may require Tenant to provide any environmental assessment studies required by the Federal Communications Commission and obtain, at Tenant's expense, an interference study indicating whether Tenant's intended use will interfere with any existing communications facilities on the Water Tower.

c. Landlord does not guarantee to Tenant subsequent noninterference with Tenant's communications operations, provided, however, that in the event any other party except a governmental unit, office or agency requests a lease and/or permission to place any type of additional antennae or transmission facility on the Water Tower, the procedures of this paragraph shall govern to determine whether such antennae or transmission facility will interfere with Tenant's transmission operations.

d. If Landlord receives a request to lease space on the Water Tower from additional users, Landlord shall require such additional user to submit a proposal complete with all technical specifications to enable Landlord and Tenant to review such proposed use for noninterference; however, Landlord shall not be required to provide Tenant with any specifications or information claimed to be of a proprietary nature by the third party. The third party shall be responsible for the reasonable cost of preparing the technical specifications for its proposed transmission facility. Tenant shall have thirty (30) days following receipt of said proposal to make any objections thereto, and failure to make any objection within said thirty (30) day period shall be deemed consent by Tenant to the installation of antennae or transmission facilities pursuant to said proposal. If Tenant gives notice of objection due to interference during such 30 day period and Tenant's objections are verified by Landlord to be valid, then Landlord shall not permit the proposal to proceed until the additional user modifies the proposal in a manner determined, in Landlord's reasonable judgment, to adequately reduce the interference. In that case, Landlord may proceed with the proposal. A governmental unit may be allowed to place antennae or other communications facilities on the Water Tower regardless of potential or actual interference with Tenant's use, provided however, if Tenant's use of the Premises is materially affected, Tenant may terminate the Lease without further obligations hereunder.

e. Tenant's use and operation of its facilities shall not interfere with the use and operation of other communication facilities on the Water Tower which pre-existed Tenant's facilities. If Tenant's facilities cause interference with such pre-existing facilities, Tenant shall take all measures reasonably necessary to correct and eliminate the interference. If the interference cannot be eliminated in a reasonable time, Tenant shall immediately cease operating its facility until the interference has been eliminated. If the interference cannot be eliminated within 30 days, Landlord may terminate this Lease. If a subsequent user interferes with Tenant's facilities, Landlord shall require the user to take all measures reasonably necessary to correct and eliminate the interference. If the interference cannot be eliminated in a reasonable time, Landlord shall require such user to immediately cease operating its facility until the interference has been eliminated. If the interference cannot be eliminated within sixty (60) days, Tenant may

Attachment: 1 PC-2022-04 Packet (5951 : AT&T - Special Permit Application)

enjoin such interference, terminate this Lease or take any other action permitted under applicable law or in equity.

16. Default and Remedies.

a. It shall be a default if either party defaults in the performance of any covenant or condition of this Lease and does not cure such default within thirty (30) days after written notice from the non-defaulting party specifying the default complained of or if Tenant abandons or vacates the Leased Premises; or if either party is adjudicated as bankrupt or makes any assignment for the benefit of creditors, or becomes insolvent.

b. In the event of a default by Tenant, Landlord shall have the right, at its option, in addition to and not exclusive of any other remedy Landlord may have by operation of law, without any further demand or notice, to re-enter the Leased Premises and eject all persons therefrom, and terminate this Lease in which event all amounts currently due hereunder shall become immediately due and payable, Landlord shall make its best efforts to relet the Leased Premises, or any part thereof, upon such terms and conditions as Landlord may deem advisable, and any monies received from such reletting shall be applied first to the expenses of such reletting and collection, including reasonable attorneys' fees, any real estate commissions paid, and thereafter toward payment of all sums due to Landlord hereunder. If a sufficient sum shall not be realized to pay such sums and other charges, Landlord may bring an action to collect any amounts not paid by Tenant hereunder.

c. No re-entry and taking of possession of the Leased Premises by Landlord shall be construed as an election on Landlord's part to terminate this Lease, regardless of the extent of renovations and alterations by Landlord, unless a written notice of such intention is given to Tenant by Landlord. Notwithstanding any reletting without termination, Landlord may at any time thereafter elect to terminate this Lease for such previous breach.

d. If suit shall be brought by Landlord for recovery of possession of the Leased Premises, for the recovery of any rent or any other amount due under the provisions of this Lease, or by either party because of the breach of any other covenant, the breaching party shall pay to the non-breaching party all expenses incurred therefor, including reasonable attorney fees.

17. Cure by Landlord. In the event of any default of this Lease by Tenant, the Landlord may at any time, after notice, cure the default for the account of and at the expense of the Tenant. If Landlord is compelled to pay or elects to pay any sum of money or to do any act which will require the payment of any sum of money or is compelled to incur any expense, including reasonable attorney fees in instituting, prosecuting or defending any action to enforce the Landlord's rights under this Agreement, the sums so paid by Landlord, with all interest, costs and damages shall be deemed to be Base Rent and shall be due from the Tenant to Landlord on the first day of the month following the incurring of the respective expenses.

18. Optional Termination.

a. This Lease may be terminated (i) by Tenant if it is unable to obtain or maintain any license, permit, or other governmental approval necessary for the construction and/or operation

Attachment: 1 PC-2022-04 Packet (5951 : AT&T - Special Permit Application)

of the Antennae Facilities or Tenant's business; (ii) by Landlord if the Landlord decides, in its sole discretion and for any reason, to discontinue use of the Water Tower; (iii) by Landlord if it determines, in its sole discretion and for any reason, that the Water Tower is structurally unsound or otherwise not suitable for Tenant's use, including but not limited to consideration of age of the structure, damage or destruction of all or part of the Water Tower from any source, or factors relating to the condition of the Water Tower; (iv) by Landlord if it determines in its sole discretion that continued use of the Water Tower by Tenant is in fact a threat to health, safety or welfare or violates applicable laws or ordinances; or (v) by Landlord at its sole discretion if Tenant loses its license to provide PCS/cellular service for any reason, including, but not limited to, nonrenewal or cancellation of its license.

b. Upon termination of this Lease for any reason, Tenant shall remove its equipment, personal property, Antennae Facilities, and leasehold improvements from the Leased Premises as required by Section 6c(1) hereof, and shall repair any damage to the Premises caused by such equipment, normal wear and tear excepted; all at Tenant's sole cost and expense. Any such property or facilities which are not removed pursuant to the requirements of Section 6c(1) hereof shall become the property of Landlord.

19. Liquidated Damages: Termination. Notice of Tenant's termination pursuant to paragraph 18 shall be given to Landlord in writing by certified mail, return receipt requested, and shall be effective upon receipt of such notice. All rentals paid for the Lease of the Leased Premises prior to said termination date shall be retained by Landlord. Upon such termination, this Lease shall become null and void and the parties shall have no further obligations to each other, except that rental payments to the Landlord shall continue as liquidated damages for the remainder of the contract year in which such termination occurs.

20. Alteration. Damage or Destruction. If the Water Tower or any portion thereof is altered, destroyed or damaged so as to materially hinder effective use of the Antennae Facilities through no fault or negligence of Tenant, Tenant may elect to terminate this Lease upon thirty (30) days' written notice to Landlord. In such event, Tenant shall promptly remove the Antennae Facilities from the Leased Premises and shall restore the Leased Premises to the same condition as existed prior to this Lease, normal wear and tear and damage from the foregoing casualty excepted. This Lease (and Tenant's obligation to pay rent) shall terminate upon Tenant's fulfillment of the obligations set forth in the preceding sentence, at which termination Tenant shall be entitled to the reimbursement of any Rent prepaid by Tenant. Landlord shall have no obligation to repair any damage to any portion of the Leased Premises.

21, Condemnation. In the event the Owned Premises are taken by eminent domain, this Lease shall terminate as of the date title to the Owned Premises vests in the condemning authority. In the event any portion of the Leased Premises is taken by eminent domain, either party shall have the right to terminate this Lease as of said date of title transfer, by giving thirty (30) days' written notice to the other party. In the event of any taking under the power of eminent domain, Tenant shall not be entitled to any portion of the reward paid for the taking and the Landlord shall receive full amount of such award. Tenant hereby expressly waives any right or claim to any portion thereof although all damages, whether awarded as compensation for diminution in value of the leasehold or to the fee of the Leased Premises, shall belong to Landlord. Tenant shall have the right to claim and recover from the condemning

Attachment: 1 PC-2022-04 Packet (5951 : AT&T - Special Permit Application)

authority, but not from Landlord, such compensation as may be separately awarded or recoverable by Tenant on account of any and all damage to Tenant's business and any costs or expenses incurred by Tenant in moving/removing its equipment, personal property, Antennae Facilities, and leasehold improvements.

22. Indemnity and Insurance.

a. Disclaimer of Liability: Landlord shall not at any time be liable for injury or damage occurring to any person or property from any cause whatsoever arising out of Tenant's construction, maintenance, repair, use, operation, condition or dismantling of the Leased Premises or Tenant's Antennae Facilities, excepting such injury or damage as may be attributable to the acts or omissions of Landlord, its agents, servants or contractors.

b. Indemnification: Tenant shall, at its sole cost and expense, indemnify and hold harmless Landlord, its respective officers, boards, commissions, employees, agents, attorneys, and contractors, elected or appointed, (hereinafter referred to as "Indemnitees"), from and against:

i. Any and all liability, obligation, damages, penalties, claims, liens, costs, charges, losses and expenses (including, without limitation, reasonable fees and expenses of attorneys), which may be imposed upon, incurred by or be asserted against the Indemnitees by reason of any act or omission of Tenant, its personnel, employees, agents, contractors or subcontractors, resulting in personal injury, bodily injury, sickness, disease or death to any person or damage to, loss of or destruction of tangible or intangible property, invasion of privacy and unauthorized use of any trademark, trade name, copyright, patent, service mark or any other right of any person, firm or corporation, which may arise out of or be in any way connected with the construction, installation, operation, maintenance, use or condition of the Leased Premises or Tenant's Antennae Facilities or the Tenant's failure to comply with any federal, state or local statute, ordinance or regulation.

ii Any and all liabilities, obligations, damages, penalties, claims, liens, costs, charges, losses and expenses (including, without limitation, reasonable fees and expenses of attorneys, expert witnesses and other consultants), which are imposed upon, incurred by or asserted against the Indemnitees by reason of any claim or lien arising out of work, labor, materials or supplies provided or supplied to Tenant, its contractors or subcontractors, for the installation, construction, operation, maintenance or use of the Leased Premises or Tenant's Antennae Facilities, and, upon the written request of Landlord, Tenant shall cause such claim or lien covering Landlord's property to be discharged or bonded within thirty (30) days following such request.

c. Assumption of Risk: Tenant undertakes and assumes for its officers, agents, affiliates, contractors and subcontractors and employees (collectively "Tenant" for the purpose of this section), all risk of dangerous conditions, if any, on or about the Owned Premises or the Water Tower, and Tenant hereby agrees to indemnify and hold harmless the Indemnitees against and from any claim asserted or liability imposed upon the Indemnitees for personal injury or property damage to any person (other than from Indemnitee's gross negligence) arising out of

Attachment: 1 PC-2022-04 Packet (5951 : AT&T - Special Permit Application)

the Tenant's installation, operation, maintenance, condition or use of the Leased Premises or Tenant's Antennae Facilities or Tenant's failure to comply with any federal, state or local statute, ordinance or regulation.

d. Defense of Indemnitees: In the event any action or proceeding shall be brought against the Indemnitees by reason of any matter for which the Indemnitees are indemnified hereunder, Tenant shall, upon notice from any of the Indemnitees, at Tenant's sole cost and expense, resist and defend the same; provided however, that Tenant shall not admit liability in any such matter on behalf of the Indemnitees without the written consent of Landlord and provided further that Indemnitees shall not admit liability for, nor enter into any compromise or settlement of, any claim for which they are indemnified hereunder, without the prior written consent of Tenant.

e. Notice, Cooperation and Expenses: Landlord shall give Tenant prompt notice of the making of any claim or the commencement of any action, suit or other proceeding covered by the provisions of the preceding paragraph. Nothing herein shall be deemed to prevent Landlord from cooperating with Tenant and participating in the defense of any litigation by Landlord's own counsel. Tenant shall pay all expenses incurred by Landlord in response to any such actions, suits or proceedings. These expenses shall include all out-of-pocket expenses such as attorney fees and shall also include the reasonable value of any services rendered by the Landlord's attorney, and the actual expenses of Landlord's agents, employees or expert witnesses, and disbursements and liabilities assumed by Landlord in connection with such suits, actions or proceedings but shall not include attorneys' fees for services that are unnecessarily duplicative of services provided Landlord by Tenant.

If Tenant requests Landlord to assist it in such defense then Tenant shall pay all expenses incurred by Landlord in response thereto, including defending itself with regard to any such actions, suits or proceedings. These expenses shall include all out-of-pocket expenses such as attorney fees and shall also include the costs of any services rendered by the Landlord's attorney, and the actual expenses of Landlord's agents, employees or expert witnesses, and disbursements and liabilities assumed by Landlord in connection with such suits, actions or proceedings.

f. Insurance: During the term of the Lease, Tenant shall maintain, or cause to be maintained, in full force and effect and at its sole cost and expense, the following types and limits of insurance:

i. Worker's compensation insurance meeting applicable statutory requirements and employer's liability insurance with minimum limits of One Million Dollars ($1,000,000) for each accident.

ii. Commercial general liability insurance with minimum limits of Five Million Dollars ($5,000,000) as the combined single limit for each occurrence and in the aggregate for bodily injury, personal injury, death and property damage. The policy shall provide blanket contractual liability insurance for all written contracts, and shall include coverage for products and completed operations liability, independent contractor's liability; coverage for property damage from perils of explosion, collapse or damage to

Attachment: 1 PC-2022-04 Packet (5951 : AT&T - Special Permit Application)

underground utilities, commonly known as XCU coverage.

iii. Automobile liability insurance covering all owned, hired, and nonowned vehicles in use by Tenant, its employees and agents, with personal protection insurance and property protection insurance to comply with the provisions of state law with minimum limits of Two Million Dollars ($2,000,000) as the combined single limit for each occurrence for bodily injury and property damage.

iv. Business interruption insurance coverage in an amount sufficient to cover such loss of revenues, for the period of time which it would take, under normal circumstances, to repair or replace that part(s) of the Antennae Facilities which is damaged and caused the loss of revenue.

v. The coverage amounts set forth above may be met by a combination of underlying and umbrella policies so long as in combination the limits equal or exceed those stated.

g. Named Insureds: All required liability policies, except for worker's compensation policies, shall include Landlord as additional insureds (herein referred to as the "Additional Insureds").

h. Evidence of insurance: Certificates of insurance for each insurance policy required to be obtained by Tenant in compliance with this paragraph shall be filed and maintained with Landlord annually during the term of the Lease. Tenant shall immediately advise Landlord of any claim or litigation that may result in liability to Landlord.

i. Insurance Companies: All insurance shall be effected under valid and enforceable policies, insured by insurers licensed to do business by the State of Oklahoma or surplus line carriers on the State of Oklahoma Insurance Commissioner's approved list of companies qualified to do business in the State of Oklahoma. All insurance carriers and surplus line carriers shall be rated A minus or better by A.M. Best Company.

j. Contractors: Tenant shall require that each and every one of its contractors and their subcontractors who perform work on the Leased Premises to carry, in full force and effect, workers' compensation, commercial general liability and automobile liability insurance coverages of the type but not the same limits which Tenant is required to obtain under the terms of this Lease or in the alternative, Tenant shall require that such contractors and subcontractors be named as additional insured parties on Tenant's insurance policies.

23. Hazardous Substance Indemnification. Tenant represents and warrants that its use of the Premises herein will not generate any hazardous substance, and it will not store or dispose on the Premises nor transport to or over the Premises any hazardous substance. Tenant further agrees to hold Landlord harmless from and indemnify Landlord against any release of any such hazardous substance and any damage, loss, or expense or liability resulting from such release including all attorneys' fees, costs and penalties incurred as a result thereof except any release caused by the negligence of Landlord,

Attachment: 1 PC-2022-04 Packet (5951 : AT&T - Special Permit Application)

its employees or agents. "Hazardous substance" shall be interpreted broadly to mean any substance or material defined or designated as hazardous or toxic waste, hazardous or toxic material, hazardous or toxic or radioactive substance, or other similar term by any federal, state or local environmental law, regulation or rule presently in effect or promulgated in the future, *as* such laws, regulations or rules may be amended from time to time; and it shall be interpreted to include, but not be limited to, any substance which after release into the environment will or may reasonably be anticipated to cause sickness, death or disease.

24. Holding Over. Any holding over after the expiration of the term hereof, with the consent of the Landlord, shall be construed to be a tenancy from month to month at two times the rents herein specified (prorated on a monthly basis) and shall otherwise be for the term and on the conditions herein specified, so far as applicable.

25. Subordination to Mortgage. Any mortgage now or subsequently placed upon any property of which the Leased Premises are a part shall be deemed to be prior in time and senior to the rights of the Tenant under this Lease. Tenant subordinates all of its interest in the leasehold estate created by this Lease to the lien of any such mortgage. Tenant shall, at Landlord's request, execute any additional documents necessary to indicate this subordination.

26. Intentionally Omitted.

27. Acceptance of Premises. Tenant accepts the Leased Premises in the condition existing as of the Commencement Date. Landlord makes no representation or warranty with respect to the condition of the Leased Premises and Landlord shall not be liable for any latent or patent defect in the Leased Premises existing at the Commencement Date of this Lease.

28. Estoppel Certificate. Tenant shall, at any time and from time to time upon not less than ten (10) days prior request by Landlord but in no event more frequently than once per year, deliver to Landlord a statement in writing certifying that (a) the Lease is unmodified and in full force (or if there have been modifications, that the Lease is in full force as modified and identify the modifications); (b) the dates to which rent and other charges have been paid; (c) so far as the person making the certificate knows, Landlord is not in default under any provisions of the Lease, if Landlord is in fact not in default at the time the statement is certified; and (d) such other matters as Landlord may reasonably request.

29. Notices. All notices, requests, demands, and other communications hereunder shall be in writing and shall be deemed given if personally delivered or mailed, certified mail, return receipt requested; to the following addresses:

If to Landlord, to:

City Manager
6407 Avondale Dr.
Nichols Hills, OK 73116

With a copy to:

Kendall Parrish

Attachment: 1 PC-2022-04 Packet (5951 : AT&T - Special Permit Application)

Cell Site No/ Name: OK1652 / Casady Square (OK)
FA No.: 10097837
Site Address: 1849 East Westminster Place, Nichols Hills, OK

Comingdeer, Lee & Gooch
6011 N. Robinson
Oklahoma City, OK 73118

If to Tenant, to:

New Cingular Wireless PCS, LLC
Attn: Network Real Estate Administration
Re: Cell Site #: OK1652; Cell Site Name: Casady Square (OK)
Fixed Asset No: 10097837
12555 Cingular Way, Suite 1300
Alpharetta, GA 30004

With a copy to:

New Cingular Wireless PCS, LLC
Attn: Legal Department
Re: Cell Site #: OK1652; Cell Site Name: Casady Square (OK)
Fixed Asset No: 10097837
15 East Midland Avenue
Paramus, NJ 07652

30. Assignment.

a. Tenant may assign this Lease to Tenant's parent companies or any affiliate or subsidiary of Tenant or its parent companies, or to any entity with or into which Tenant is merged or consolidated, or to any entity resulting from a reorganization of Tenant or its parent companies. Otherwise, Tenant may not assign this Lease or sublet the Leased Premises without the prior written consent of Landlord.

b. Nothing in this Lease shall preclude Landlord from leasing other space for communications equipment to any person or entity which may be in competition with Tenant, or any other party.

31. Successors and Assigns. This Lease shall be binding upon and inure to the benefit of the parties, their respective successors, personal representatives and assigns.

32. Non-Waiver. Failure of Landlord to insist on strict performance of any of the conditions, covenants, terms or provisions of this Agreement or to exercise any of its rights hereunder shall not waive such rights, but Landlord shall have the rights to enforce such rights at any time and take such action as might be lawful or authorized hereunder, either in law or equity. The receipt of any sum paid by Tenant to Landlord after a breach of this Agreement shall not be deemed a waiver of such breach unless expressly set forth in writing.

33. Taxes.

Attachment: 1 PC-2022-04 Packet (5951 : AT&T - Special Permit Application)

a. Tenant shall pay all real and personal property taxes (or payments in lieu of taxes) and assessments for the Leased Premises, if any, which become due and payable during the term of this Lease. All such payments shall be made, and evidence of all such payments shall be provided to Landlord, at least ten (10) days prior to the delinquency date of the payment. Tenant shall pay all taxes on its personal property on the Leased Premises.

b. Tenant shall indemnify Landlord from any and all liability, obligation, damages, penalties, claims, liens, costs, charges, losses and expenses (including, without limitation, reasonable fees and expenses of attorneys, expert witnesses and consultants), which may be imposed upon, incurred by or be asserted against Tenant in relation to the taxes owed or assessed on the Leased Premises.

c. If the methods of taxation in effect at the Commencement Date of the Lease are altered so that in lieu of or as a substitute for any portion of the property taxes and special assessments now imposed on property there is imposed a tax upon or against the rentals payable by Tenant to Landlord, Tenant shall pay those amounts in the same manner as provided for the payment of real and personal property taxes.

34. Dispute Resolution.

a. Except as otherwise provided in this Lease, any controversy between the parties arising out of this Lease or breach thereof, is subject to the mediation process described below.

b. A meeting will be held promptly between the parties to attempt in good faith to negotiate a resolution of the dispute. Individuals with decision making authority will attend the meeting regarding the dispute. If within twenty (20) days after such meeting the parties have not succeeded in resolving the dispute, they will, within twenty (20) days thereafter submit the dispute to a mutually acceptable third party mediator who is acquainted with dispute resolution methods. Landlord and Tenant will participate in good faith in the mediation and in the mediation process. The mediation shall be nonbinding. Neither party is entitled to seek or recover punitive damages in considering or fixing any award under these proceedings.

c. The costs of mediation, including any mediators fees, and costs for the use of the facilities during the meetings, shall be born equally by the parties. Each parties costs and expenses will be borne by the party incurring them.

35. Treatment in Bankruptcy. The parties to this Lease hereby expressly agree and acknowledge that it is the intention of both parties that in the event that during the term of this Lease Tenant shall become a debtor in any voluntary or involuntary bankruptcy proceeding (a "Proceeding") under the United States Bankruptcy Code, 11 U.S.C. § 101, et seq. (The "Code"), this Lease is and shall be treated as an "unexpired lease of nonresidential real property" for purposes of Section 365 of the Code, 11 U.S.C. § 365, and, accordingly, shall be subject to the provisions of subsections (d)(3) and (d)(4) of said Section 365.

36. Force Majeure. If a party is delayed or hindered in, or prevented from the performance required under this Lease (except for payment of monetary obligations) by reason of earthquakes, landslides, strikes, lockouts, labor troubles, failure of power, riots, insurrections, war, acts of God or other reasons

Attachment: 1 PC-2022-04 Packet (5951 : AT&T - Special Permit Application)

of like nature, not the fault of the party delayed in performing work or doing acts, such party is excused from such performance for the period of delay. The period for the performance of any such act shall then be extended for the period of such delay. In the event that Tenant invokes this provision because damage to the Leased Premises has hindered, delayed, or prevented Tenant from using the Premises, Tenant may immediately erect any temporary facilities on the Leased Premises necessary to resume service, provided that such temporary facilities do not unreasonably interfere with Landlord's ability to repair or restore the Leased Premises. If, in Landlord's sole and absolute discretion, it elects to repair or restore the Leased Premises, upon completion of such repair or restoration, Tenant is entitled to repair or rebuild the Tower and/or related facility in accordance with the terms agreed upon in this Lease.

37. Miscellaneous,

a. This Lease is not a franchise pursuant to the Oklahoma Constitution, nor is it a permit to use the rights-of-way of the City of Nichols Hills with the sole exception of the right of way for ingress and egress described in section 1 hereof. Any such franchise or permit must be obtained separately from Landlord.

b. Landlord and Tenant each represent and warrant to the other that all necessary authorizations and approvals required for execution and performance of this Lease have been given and that the undersigned individual is duly authorized to execute this Lease and bind the party for which it signs.

c. This Lease constitutes the entire agreement and understanding of the parties and supersedes all offers, negotiations, and other agreements of any kind. There are no representations or understandings of any kind not set forth herein. Any modification of or amendment to this Lease must be in writing and executed by both parties.

d. This Lease and performance hereunder shall be governed, interpreted, construed and regulated by the laws of the State of Oklahoma.

e. If any term, covenant, condition or provision of this Lease shall, to any extent, be invalid or unenforceable, the remainder of this Lease shall not be affected thereby, and shall be valid and enforceable to the fullest extent permitted by law.

f. Landlord hereby expressly disclaims all Warranties of Merchantability and Fitness for a Particular Purpose associated with the Premises. Subject to Landlord's maintenance and compliance obligations expressly provided herein, Tenant accepts the Leased Premises "as is."

g. Tenant shall use the utmost good faith to apply for, obtain, and keep in full force and effect all certificates, permits, licenses, and approvals affecting Tenant's ability to use the Leased Premises.

h. This Lease may be executed in any number of counterparts, each of which shall be an original, but all of which together shall constitute but one instrument.

i. This Lease does not and shall not be construed to establish or create a partnership, joint

Attachment: 1 PC-2022-04 Packet (5951 : AT&T - Special Permit Application)

Cell Site No / Name : OK1652 / Casady Square (OK)
FA No.: 10097837
Site Address: 1849 East Westminster Place, Nichols Hills, OK

venture, franchise or other form of business association between Landlord and Tenant.

Attachment: 1 PC-2022-04 Packet (5951 : AT&T - Special Permit Application)

Cell Site No/ Name: OK1652 / Casady Square (OK)
FA No.: 10097837
Site Address: 1849 East Westminster Place, Nichols Hills, OK

This Lease was executed as of the date first set forth above.

LANDLORD:
City of Nichols Hills

By: E. Peter Hoffman Jr.

Name: E. Peter Hoffman Jr.

Title: Mayor

Date: June 12, 2012

Nichols Hills Municipal Authority

By: E. Peter Hoffman Jr.

Name: E. Peter Hoffman Jr.

Title: Chairman

Date: June 12, 2012

TENANT:
New Cingular Wireless PCS, LLC,
a Delaware limited liability company
By: AT&T Mobility Corporation
Its Manager

By: _____
Name: Kevin L. Lilly

Title: Area Manager, Construction & Engineering AR/OK

Date: 6/1/12

Attachment: 1 PC-2022-04 Packet (5951 : AT&T - Special Permit Application)

EXHIBIT A

LEGAL DESCRIPTION OF OWNED PREMISES

PARENT TRACT DESCRIPTION
Lots Twenty-four (24) and Twenty-five (25), Block One Hundred Eight (108), WILSHIRE SECTION, in plat of Blocks 106 to 109 both inclusive and Blocks 112 and 113, WILSHIRE SECTION, an addition in Oklahoma County, Oklahoma according to the recorded plat thereof.
(WARRANTY DEED RECORDED IN BOOK 1562, PAGE 443, DEED RECORDS OF OKLAHOMA COUNTY, OKLAHOMA.)

Attachment: 1 PC-2022-04 Packet (5951 : AT&T - Special Permit Application)

Cell Site / Name: OK1652 / Casady Square (OK)
FA No: 10097837
Site Address: 1849 East Westminster Place, Nichols Hills OK

EXHIBIT B

LEASED PREMISES

LESSEE'S LEASE SITE DESCRIPTION
A tract of land lying in and being part of Lot 25, Block 108, WILSHIRE SECTION NICHOLS HILLS, An Addition to Oklahoma County, Oklahoma, according to the recorded plat thereof, as described in Book 1562, Page 443, Deed Records of Oklahoma County, Oklahoma; Said tract being more particularly described as follows:
Commencing at a 3/8" iron rod found for the Southwest corner of said Lot 25; Thence N 00°01'43" W on the West line of said Lot 25, a distance of 41.00 feet to a point on said West line; Thence N 89°58'17" E perpendicular to said West line, a distance of 10.00 feet to a 1/2" iron rod with cap set for the Southwest corner, said corner being the Point of Beginning; Thence N 00°01'43" W and parallel with said West line, a distance of 20.00 feet to a 1/2" iron rod with cap set for the Northwest corner; Thence N 89°58'17" E perpendicular to said West line, a distance of 12.00 feet to a 1/2" iron rod with cap set for the Northeast corner; Thence S 00°01'43" E and parallel with said West line, a distance of 20.00 feet to a 1/2" iron rod with cap set for the Southeast corner; Thence S 89°58'17" W perpendicular to said West line, a distance of 12.00 feet to the Point of Beginning, containing 240.00 square feet or 0.006 acres, more or less.

LESSEE'S ACCESS/UTILITY EASEMENT DESCRIPTION
A 12.00 foot wide easement for ingress, egress and utility purposes crossing a part of Lot 25, Block 108, WILSHIRE SECTION NICHOLS HILLS, An Addition to Oklahoma County, Oklahoma, according to the recorded plat thereof, as described in Book 1562, Page 443, Deed Records of Oklahoma County, Oklahoma; Said easement being 6.00 feet on each side of the following described centerline:
Commencing at a 3/8" iron rod found for the Southwest corner of said Lot 25; Thence N 00°01'43" W on the West line of said Lot 25, a distance of 35.00 feet to the Point of Beginning on said West line, also being the East Public Right-of-way line of Greystone Avenue; Thence N 89°58'17" E perpendicular to said West line, a distance of 22.00 feet to the Point of termination 6.00 feet South of the 1/2" iron rod with cap set for the Southeast corner of the above described 0.006 acre Lessee's Lease Site. Side lines of said easement to be shortened or extended such as to begin on the East Public Right-of-way line of Greystone Avenue and terminate 6.00 feet South of the Southeast corner of said 0.006 acre Lessee's Lease Site.

Attachment: 1 PC-2022-04 Packet (5951 : AT&T - Special Permit Application)

Cell Site / Name: OK1652 / Casady Square (OK)
FA No: 10097837
Site Address: 1849 East Westminster Place, Nichols Hills OK

EXHIBIT B

Page 2 of 2

LEASED PREMISES

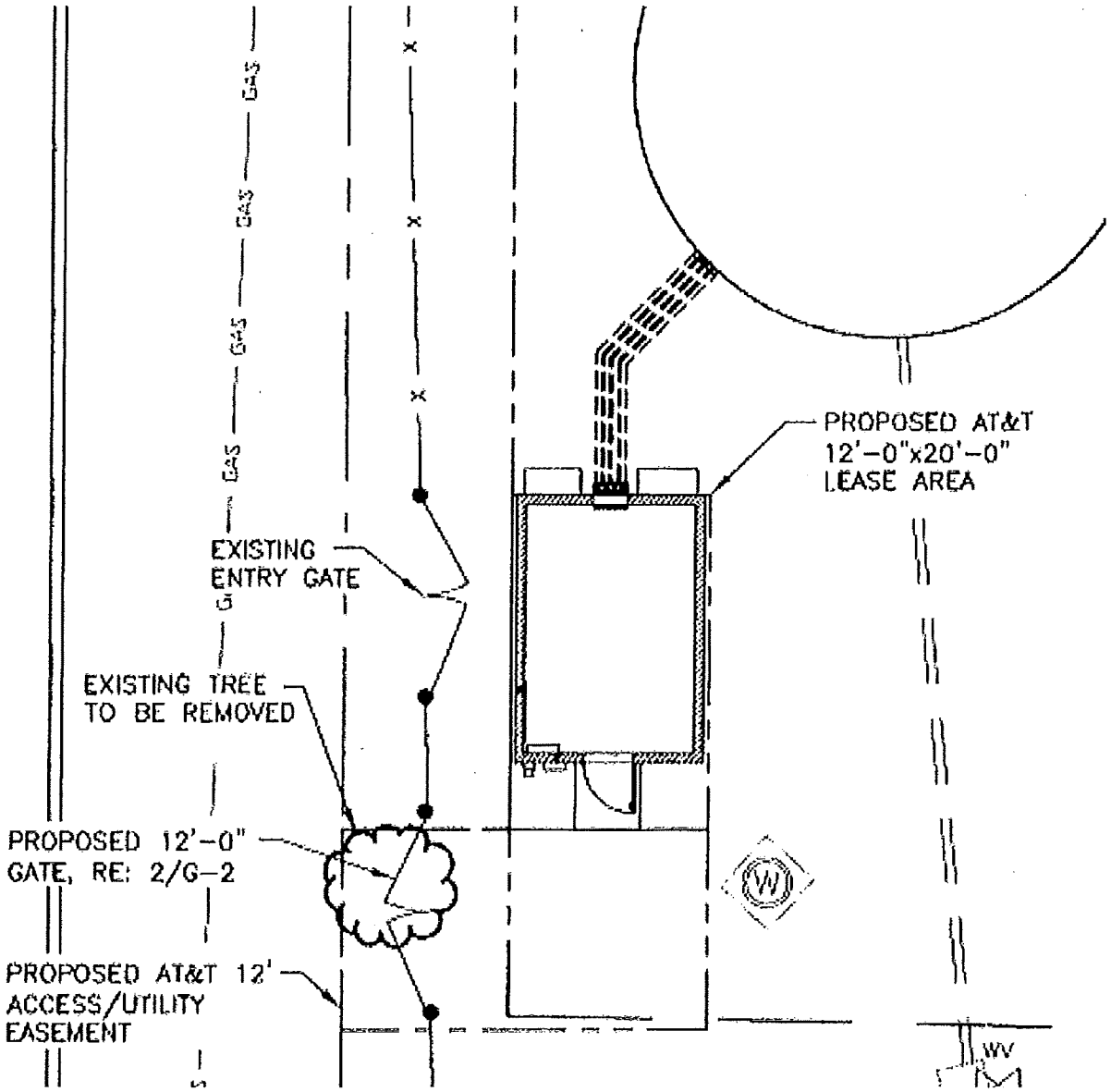

Attachment: 1 PC-2022-04 Packet (5951 : AT&T - Special Permit Application)

EXHIBIT C

Description of Antenna Facilities

6 Antennas

3 Tower Mounted Amplifiers

6 Runs of 1-5/8" Coax

3 Runs of 3/8" Fiber Optic Cable

1 Run of 3/8" Control Cable

All installed on a collar mount placed on the neck of the Water Tower

Plus all ground equipment that will be kept within Tenant's 12' x 20' lease area adjacent to the Water Tower.

Attachment: 1 PC-2022-04 Packet (5951 : AT&T - Special Permit Application)

SURVEY OF A LESSEE'S LEASE SITE LYING WITHIN LOTS 24–25, BLOCK 108, WILSHIRE SECTION NICHOLS HILLS, OKLAHOMA COUNTY, OKLAHOMA

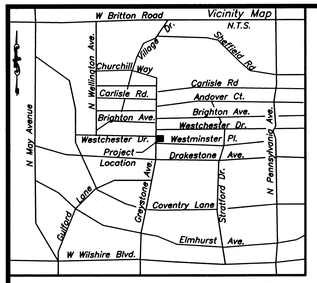

MAGNETIC DECLINATION
Magnetic Declination Information Provided By The National Geophysical Data Center Boulder, Colorado On 12/23/11
Model: IGRF2010

ZONING DATA

ZONED: R–160 (RESIDENTIAL SINGLE FAMILY)
SETBACK: SHOWN PER SUBDIVISION PLAT
PROVIDED BY: KELLY HURLEY, DIRECTOR OF PLANNING & ZONING DEPT.
CITY OF NICHOLS HILLS
6407 AVONDALE DRIVE
NICHOLS HILLS, OK 73116
PHONE: 405–843–5222

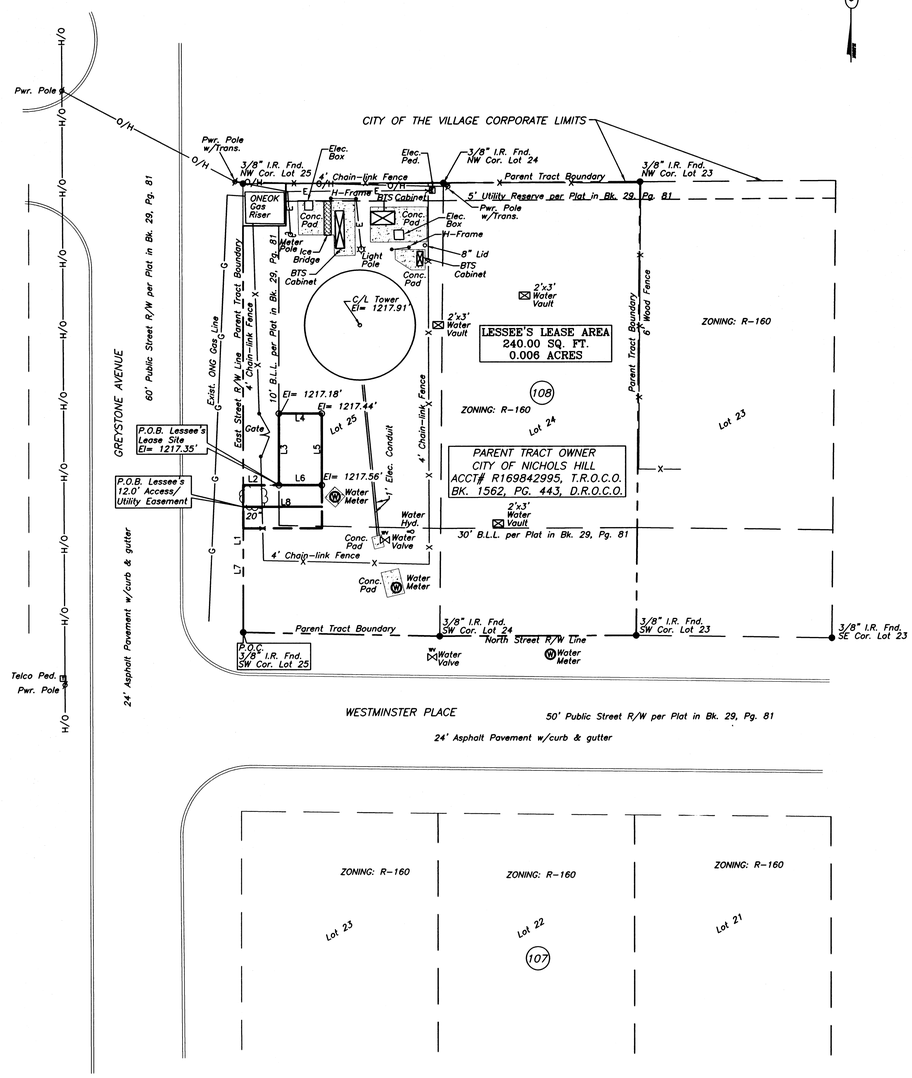

LINE	BEARING	DISTANCE
L1	N 00°01'43" W	41.00'
L2	N 89°58'17" E	10.00'
L3	N 00°01'43" W	20.00'
L4	N 89°58'17" E	12.00'
L5	S 00°01'43" E	20.00'
L6	S 89°58'17" W	12.00'
L7	N 00°01'43" W	35.00'
L8	N 89°58'17" E	22.00'

PROPERTY DESCRIPTION PER PREVIOUSLY RECORDED LEGAL

PARENT TRACT DESCRIPTION
Lots Twenty–four (24) and Twenty–five (25), Block One Hundred Eight (108), WILSHIRE SECTION, in plat of Blocks 106 to 109 both inclusive and Blocks 112 and 113, WILSHIRE SECTION, an addition in Oklahoma County, Oklahoma according to the recorded plat thereof.
(WARRANTY DEED RECORDED IN BOOK 1562, PAGE 443, DEED RECORDS OF OKLAHOMA COUNTY, OKLAHOMA.)

SURVEY OF A LESSEE'S LEASE SITE LYING WITHIN LOTS 24–25, BLOCK 108, WILSHIRE SECTION NICHOLS HILLS, OKLAHOMA COUNTY, OKLAHOMA

LESSEE'S LEASE SITE DESCRIPTION
A tract of land lying in and being part of Lot 25, Block 108, WILSHIRE SECTION NICHOLS HILLS, An Addition to Oklahoma County, Oklahoma, according to the recorded plat thereof, as described in Book 1562, Page 443, Deed Records of Oklahoma County, Oklahoma; Said tract being more particularly described as follows:
Commencing at a 3/8" iron rod found for the Southwest corner of said Lot 25; Thence N 00°01'43" W on the West line of said Lot 25, a distance of 41.00 feet to a point on said West line; Thence N 89°58'17" E perpendicular to said West line, a distance of 10.00 feet to a 1/2" iron rod with cap set for the Southwest corner, said corner being the Point of Beginning; Thence N 00°01'43" W and parallel with said West line, a distance of 20.00 feet to a 1/2" iron rod with cap set for the Northwest corner; Thence N 89°58'17" E perpendicular to said West line, a distance of 12.00 feet to a 1/2" iron rod with cap set for the Northeast corner; Thence S 00°01'43" E and parallel with said West line, a distance of 20.00 feet to a 1/2" iron rod with cap set for the Southeast corner; Thence S 89°58'17" W perpendicular to said West line, a distance of 12.00 feet to the Point of Beginning, containing 240.00 square feet or 0.006 acres, more or less.

LESSEE'S ACCESS/UTILITY EASEMENT DESCRIPTION
A 12.00 foot wide easement for ingress, egress and utility purposes crossing a part of Lot 25, Block 108, WILSHIRE SECTION NICHOLS HILLS, An Addition to Oklahoma County, Oklahoma, according to the recorded plat thereof, as described in Book 1562, Page 443, Deed Records of Oklahoma County, Oklahoma; Said easement being 6.00 feet on each side of the following described centerline:
Commencing at a 3/8" iron rod found for the Southwest corner of said Lot 25; Thence N 00°01'43" W on the West line of said Lot 25, a distance of 35.00 feet to the Point of Beginning on said West line, also being the East Public Right–of–way line of Greystone Avenue; Thence N 89°58'17" E perpendicular to said West line, a distance of 22.00 feet to the Point of termination 6.00 feet South of the 1/2" iron rod with cap set for the Southeast corner of the above described 0.006 acre Lessee's Lease Site. Side lines of said easement to be shortened or extended such as to begin on the East Public Right–of–way line of Greystone Avenue and terminate 6.00 feet South of the Southeast corner of said 0.006 acre Lessee's Lease Site.

I, VIRGIL C. VAUGHN, a Licensed Land Surveyor, certify that this survey meets the minimum standards of accuracy as set by the Oklahoma State Board of Registration of Land Surveyors.

Virgil C. Vaughn, OK. L.S. #405 Date

NOTE: "THIS DOCUMENT IS PRELIMINARY IN NATURE AND IS NOT A FINAL, SIGNED AND SEALED DOCUMENT".

NOTES CONCERNING SURVEY:
1: The Surveyor was not provided with a TITLE REPORT. Nor further abstracting or research was done by the surveyor.

2: Bearings shown hereon are based on the Oklahoma State Plane Coordinate System, North Zone, NAD83 Datum.

3: The elevations shown hereon are based on the NAVD88 Datum.

4: The latitude and longitude shown hereon are based on the NAD83 Datum and meet or exceed the minimum requirements for a FCC/FAA 1A survey which is defined as plus or minus 20 feet horizontal and plus or minus 3 feet vertical. This information was established and determined by GPS on 12/23/2011.

5: The Lessee's Lease Site shown on this survey DOES NOT lie within the 100 year plain and is located within the Flood Zone "X" per the Federal Emergency Management Agency (FEMA) as shown on the Flood Insurance Rate Map (FIRM), Community Panel Number 40109C 0170H, which bears an effective date of December 18, 2009. Flood Zone determination is made through graphic plotting only and no other responsibility is herein assumed for accuracy of the base flood elevation or flood zone areas shown on the FIRM.

6: This survey does not provide any determination concerning wetlands, fault lines, toxic waste or any other environmental issues. Such matters should be directed to an expert consultant.

7: There may be additional buried or underground utilities in the area which the surveyor is unaware of and no liability for such is assumed herein. OKLAHOMA ONE–CALL SYSTEM, INC. (1–800–522–6543)

8: THIS IS NOT A BOUNDARY SURVEY OF THE PARENT TRACT.

TOWER DATA DETAIL
N.T.S.

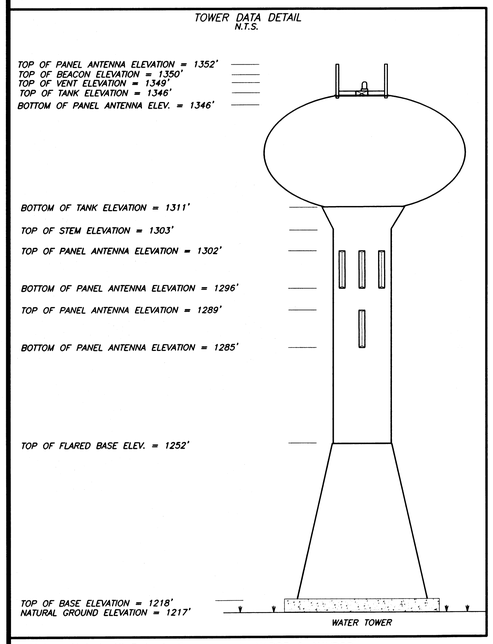

Unless Noted, All Data Is Expressed In NAD83 & NAVD88

LOCATION/DESCRIPTION	LATITUDE	LONGITUDE	ELEVATION
TOWER NAD83/NAVD88	35°33'31.147"	97°33'28.910"	1217.91'
TOWER NAD27/NGVD29	35°33'30.943"	97°33'27.763"	1217.46'

NOTE: 1A data taken from C/L existing tower as shown hereon.

BEFORE YOU DIG !!!
CALL OKIE FOR LOCATION OF UNDERGROUND UTILITIES.
1–800–522–6543

GRAPHIC SCALE
20 0 10 20 40 80
(IN FEET)
1 inch = 20 ft.

THE UTILITIES AS SHOWN ON THIS DRAWING WERE DEVELOPED FROM THE INFORMATION AVAILABLE, THIS IS NOT IMPLIED NOR INTENDED TO BE THE COMPLETE INVENTORY OF UTILITIES IN THIS AREA. IT IS THE CLIENTS RESPONSIBILITY TO VERIFY THE LOCATION OF ALL UTILITIES (WHETHER SHOWN OR NOT) AND PROTECT SAID UTILITIES FROM ANY DAMAGE.

911 ADDRESS: 4403 SW 36TH STREET, OKLAHOMA CITY, OK 73119–2404

Bearings Based on O.S.P.C.
Established GPS: 12/23/2011
Datum: Horz: NAD83 OK North Zone
Vert: Geoid 96

NO.	REVISION	DATE	BY

DATE SURVEYED: 12/23/11	DATE DRAFTED: 12/27/11
FIELD WORK: S.G.	OFFICE WORK: J.L.S.
CHK'D BY: V.C.V.	JOB NO.: 3015.0134
SCALE: 1" = 20'	

LIGHT POLE (U/G ELEC)
LIGHT POLE (O/H ELEC)
POWER POLE
GUY LINE
OVERHEAD ELECTRIC
U/G ELECTRIC
WATER LINE
WATER METER
WATER VALVE
GAS LINE
GAS METER
TELEPHONE LINE
TELEPHONE RISER
SANITARY SEWER MANHOLE
FENCE LINE
STORM SEWER MANHOLE
STORM SEWER LINE
1/2" IRON ROD WITH CAP SET
IRON ROD FOUND

PREPARED BY:
H&S SURVEYING, INC.
Surveying and Telecommunication Company
SERVING THE CENTRAL U.S.
201 N. BICKFORD, EL RENO, OK. 73036
PH: (405) 262–0249 – FAX: (405) 262–5107
CA 1600 (LS) EXPIRES: 6/30/13
HSSURVEYING1@AOL.COM

PREPARED FOR:
at&t

SITE SURVEY OF:
OK1652–F / CASADY SQUARE
LOTS 24–25, BLOCK 108, WILSHIRE SECTION NICHOLS HILLS, OK

PREPARED FOR:
AT&T MOBILITY
10802 EXECUTIVE CENTER DR., STE# 300, LITTLE ROCK, AR 72211

DRAWING NO.
S-1

SHEET 1 OF 1

Attachment: 1 PC-2022-04 Packet (5951: AT&T - Special Permit Application)

DocuSign Envelope ID: 984E5229-2133-4203-B004-EF0739353D77

AT&T Mobility

THE DESIGN SHOWN ON THESE DRAWINGS IS BASED ON INFORMATION GATHERED FROM AT&T RFDS AT&T RFDS V2021_1.00 DATED 10/26/2021.

SITE NAME:	CASADY SQUARE
SITE ID:	OKL01652
FA LOCATION CODE:	10097837
PROJECT:	LTE-5G NR RADIO / ANT MOD RF MOD
TOWER NUMBER:	N/A
PACE ID:	**MROAR038897** / MROAR038811 / MROAR038810 / MROAR040133
ADDRESS:	1849 EAST WESTMINSTER PLACE, OKLAHOMA CITY, OK 73120
TOWER INFO:	129'-0" WATER TANK
SITE COORDINATES:	35.558642° / -97.558022°

PREPARED BY:
NEXIUS SOLUTIONS, INC.
2595 NORTH DALLAS PARKWAY
SUITE 300
FRISCO, TX 75034

CLIENT:
AT&T Mobility
1700 CANTRELL ROAD,
LITTLE ROCK, AR 72223

LICENSED PROFESSIONAL ENGINEER
JACK T. PHIPPS
11626
OKLAHOMA

PE RENEWAL 10/31/22
NEXIUS SOLUTIONS, INC.
OKLAHOMA FIRM NUMBER 7540
RENEWAL DATE 06/30/23
DATE SIGN 06/24/2

SITE INFORMATION

SITE NAME:	CASADY SQUARE
SITE ID:	OKL01652
FA LOCATION CODE:	10097837
ADDRESS:	1849 EAST WESTMINSTER PLACE
CITY, STATE ZIP:	OKLAHOMA CITY, OK 73120
COUNTY:	OKLAHOMA
LATITUDE:	35.558642°
LONGITUDE:	-97.558022°
GROUND ELEVATION:	1218'± AMSL
STRUCTURE TYPE:	WATER TANK
STRUCTURE HEIGHT:	129'-0" A.G.L (ABOVE GROUND LEVEL)
RAD CENTER:	70'-0" A.G.L
APPLICANT:	AT&T MOBILITY 17000 CANTRELL ROAD, STEVEN B. LAMBERT, sl5279@att.com LITTLE ROCK, AR 72223
SITE ACQUISITION:	HAZEL MAURO – SITE ACQUISITION MANAGER 155 INTERNATIONAL BLVD GLENDALE HEIGHTS, IL 60139 hazel.mauro@nexius.com
A&E SERVICES:	NEXIUS SOLUTIONS, INC. 2595 NORTH DALLAS PKWY, SUITE 300 FRISCO, TX 75034 jack.phipps@nexius.com
STRUCTURE OWNER:	DEPARTMENT OF UTILITIES

811 Know what's below. Call before you dig.

TO OBTAIN LOCATION OF PARTICIPANTS UNDERGROUND FACILITIES BEFORE YOU DIG IN OKLAHOMA, CONTACT CALL OKIE
TOLL FREE: 1-800-522-6543 OR
www.callokie.com

OKLAHOMA STATUTE REQUIRES MIN OF 2 WORKING DAYS NOTICE BEFORE YOU EXCAVATE

VICINITY MAP

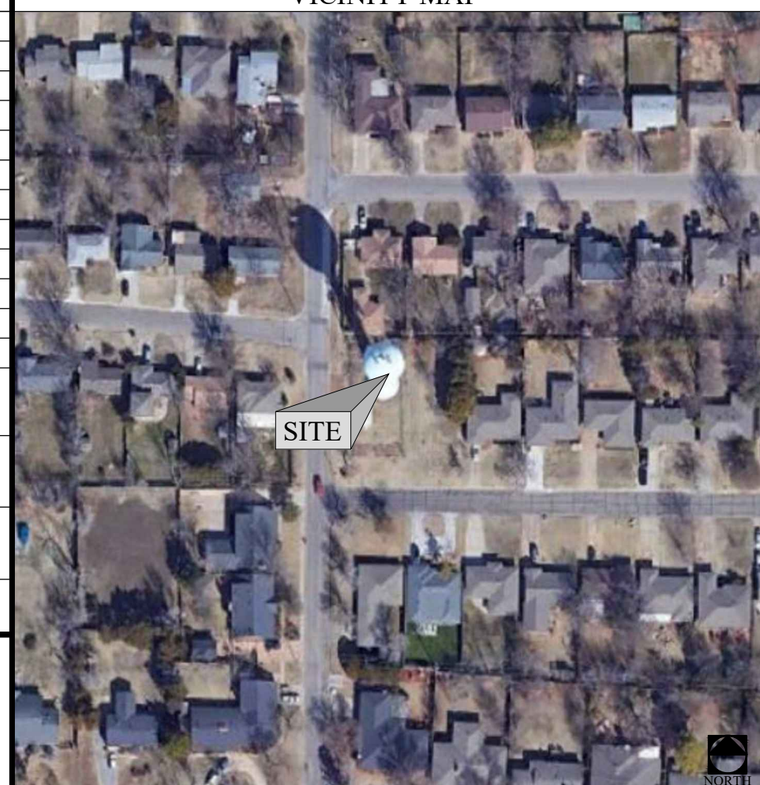

APPLICABLE CODES

ALL WORK SHALL BE PERFORMED AND MATERIALS INSTALLED IN ACCORDANCE WITH CURRENT EDITIONS OF THE FOLLOWING APPLICABLE CODES AS ADOPTED BY THE LOCAL GOVERNING AUTHORITIES.

- 2018 INTERNATIONAL BUILDING CODE
- 2020 NATIONAL ELECTRIC CODE

THESE DRAWINGS ARE DESIGNED TO THE LATEST CODES. THEY ALSO MEET THE ADOPTED CODE REQUIREMENTS OF THE JURISDICTION.

SHEET INDEX

SHEET #	SHEET DESCRIPTION
T-1	TITLE SHEET
C-1	SITE PHOTOS
C-2	DETAILED SITE PLAN
C-3	SHELTER SITE PLAN
C-4	TOWER ELEVATIONS
RF-1	RF SCHEDULE
RF-2	ANTENNA SECTOR PLANS
EQ-1	EQUIPMENT DETAILS
GN-1	GENERAL NOTES

SCOPE OF WORK

ALPHA, BETA, GAMMA:

- ***SAQ TO MAKE SURE 3FT HORIZONTAL SEPARATION BETWEEN CBAND AND LTE ANTENNAS AND A MINIMUM OF 12IN VERTICAL SEPARATION BETWEEN CBAND STACKED ANTENNAS IS MAINTAINED***
- REMOVE 1X SBNHH-1D65C ANTENNA FROM POS4.
- REMOVE 1X EXISTING RRUS-11 B12 FROM POS4. REMOVE 1X EXISTING RRUS-12 B5 FROM POS2.
- ADD 1X NEW TPA65R-BU8DA-K ON POS4.
- ADD 1X NEW RRUS-4449 B5/B12 (LTE 700, LTE 850) ON POS4 MOUNTED ON A NEW DUAL BRACKET. CONNECT PORTS TO ANTENNA ON POS4.
- REMOUNT 1X EXISTING RRUS-32 B30 BACK TO BACK WITH RRUS-4449. CONNECT PORTS TO ANTENNA ON POS4.
- ADD 1X NEW AIR6449 N77D AND 1X NEW AIR6419 N77G ON POS3 MOUNTED ABOVE EACH OTHER STACKED.

POWER:

- REMOVE UMTS TECHNOLOGY. WE CAN REMOVE 6X COAX MAIN LINES IF ATT AGREES.
- REMOVE ALL FC12S, DC2S, SQUIDS, TRUNKS.
- ADD 1X NEW DC9-48-60-24-PC16-EV, ADD 3X NEW 6AWG6 DC TRUNKS @ 150' EACH, AND ADD 1X NEW 24 PAIR FIBER TRUNKS @ 50 (PER SECTOR)
- EXISTING NETSURE 7100-48V DC POWER PLANT.

ANY DEVIATION THAT DIFFERS SUBSTANTIALLY FROM WHAT IS SHOWN ON THE CONSTRUCTION DRAWINGS MUST BE APPROVED BY THE ENGINEER OF RECORD. NO CHANGES THAT ALTER THE CHARACTER OF THE WORK CAN BE MADE DURING CONSTRUCTION WITHOUT ISSUING A CHANGE ORDER.

NEXIUS SOLUTIONS, INC. IS REGISTERED IN OK

FOR CONSTRUCTION

SUBMITTALS

REV	DATE	DESCRIPTION	BY
A	01/18/22	CD FOR REVIEW	WF
0	06/24/22	FINAL CD	WF

SITE INFORMATION:

SITE NAME:
CASADY SQUARE

SITE NUMBER:
OKL01652

SITE ADDRESS:
1849 EAST WESTMINSTER PLACE
OKLAHOMA CITY, OK 73120

SITE COORDINATES:
35.558642° / -97.558022°

SHEET TITLE:
TITLE SHEET

SHEET NUMBER:
T-1

Attachment: 1 PC-2022-04 Packet (5951 : AT&T - Special Permit Application)

THIS DOCUMENT IS THE DESIGN PROPERTY AND COPYRIGHT OF NEXIUS AND FOR THE EXCLUSIVE USE BY THE TITLE CLIENT. DUPLICATION OR USE WITHOUT THE EXPRESS WRITTEN CONSENT OF THE CREATOR IS STRICTLY PROHIBITED. DRAWING SCALES ARE INTENDED FOR 22"x34" SIZE PRINTED MEDIA ONLY. 11"x17" IS DEEMED HALF SCALE, AND ALL OTHER PRINTED SIZES ARE DEEMED "NOT TO SCALE".

DocuSign Envelope ID: 984E5229-2133-4203-B004-EF0739353D77

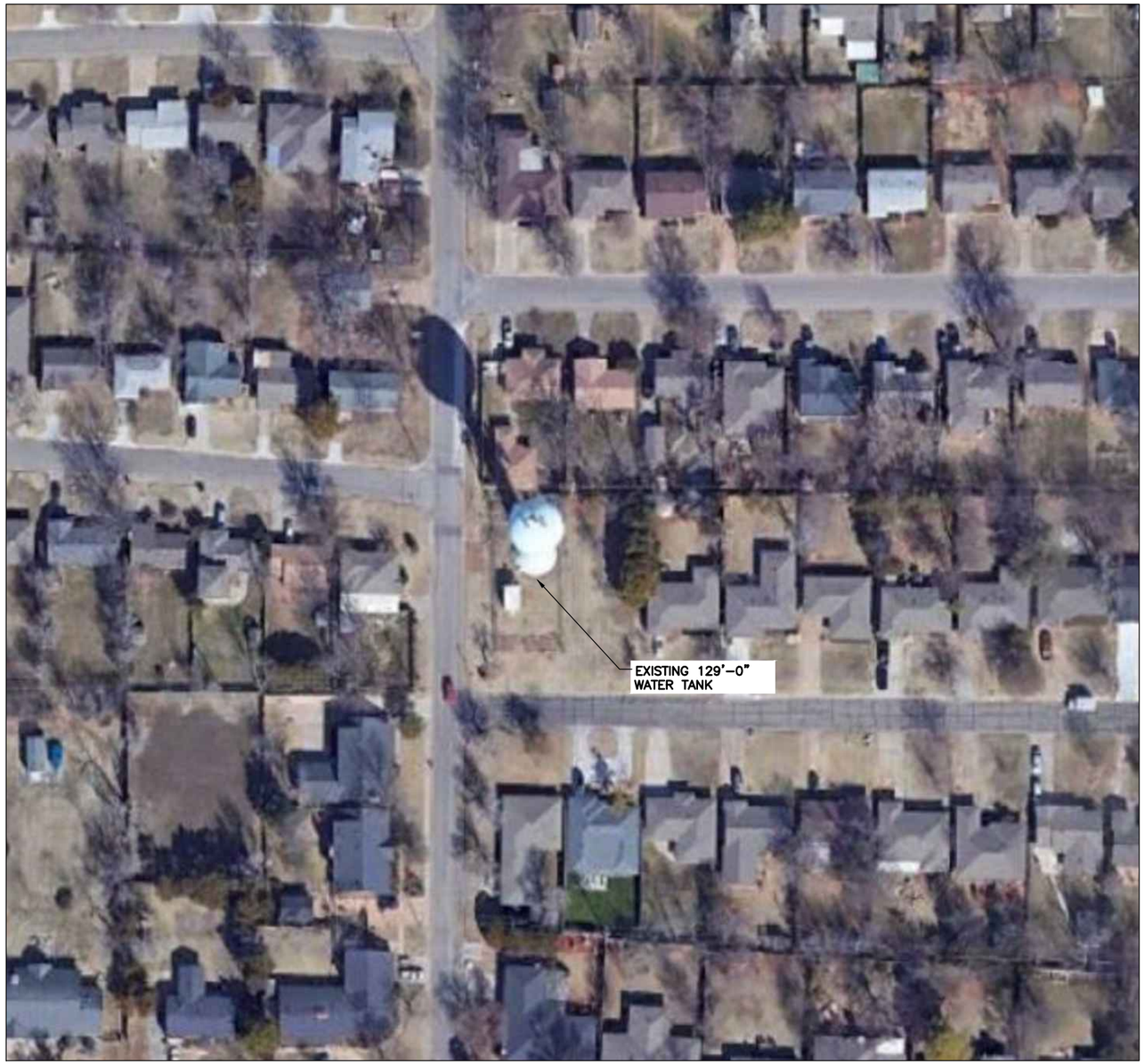

1 OVERALL SITE PLAN
SCALE: 1:100

N

11"x17" SCALE: 1" = 200'-0"
22"x34" SCALE: 1" = 100'-0"

200' 0 200' 400' 800'
100' 0 100' 200' 400'

NOTE:

THIS PLAN WAS CREATED BASED ON INFORMATION GATHERED FROM PREVIOUS DRAWINGS, AERIAL PHOTOGRAPHY, GIS DATA, AND/OR ASSESSORS MAPS PROVIDED BY LOCAL SOURCES. THIS PLAN IS IN NO WAY INTENDED TO BE USED AS A BOUNDARY SURVEY.

2 STRUCTURE PHOTO

PREPARED BY:
nexius
NEXIUS SOLUTIONS, INC.
2595 NORTH DALLAS PARKWAY
SUITE 300
FRISCO, TX 75034

CLIENT:
AT&T Mobility
1700 CANTRELL ROAD,
LITTLE ROCK, AR 72223

LICENSED PROFESSIONAL ENGINEER
JACK T. PHIPPS
11626
OKLAHOMA

PE RENEWAL 10/31/22
DATE SIGN 06/24/
NEXIUS SOLUTIONS, INC.
OKLAHOMA FIRM NUMBER 7540
RENEWAL DATE 06/30/23

NEXIUS SOLUTIONS, INC. IS REGISTERED IN OK

FOR CONSTRUCTION

SUBMITTALS

REV	DATE	DESCRIPTION	BY
A	01/18/22	CD FOR REVIEW	WF
0	06/24/22	FINAL CD	WF

SITE INFORMATION:

SITE NAME:
CASADY SQUARE

SITE NUMBER:
OKL01652

SITE ADDRESS:
1849 EAST WESTMINSTER PLACE
OKLAHOMA CITY, OK 73120

SITE COORDINATES:
35.558642° / -97.558022°

SHEET TITLE:
OVERALL SITE PLAN

SHEET NUMBER:
C-1

THIS DOCUMENT IS THE DESIGN PROPERTY AND COPYRIGHT OF NEXIUS AND FOR THE EXCLUSIVE USE BY THE TITLE CLIENT. DUPLICATION OR USE WITHOUT THE EXPRESS WRITTEN CONSENT OF THE CREATOR IS STRICTLY PROHIBITED. DRAWING SCALES ARE INTENDED FOR 22"x34" SIZE PRINTED MEDIA ONLY. 11"x17" IS DEEMED HALF SCALE, AND ALL OTHER PRINTED SIZES ARE DEEMED "NOT TO SCALE".

Attachment: 1 PC-2022-04 Packet (5951 : AT&T - Special Permit Application)

DocuSign Envelope ID: 984E5229-2133-4203-B004-EF0739353D77

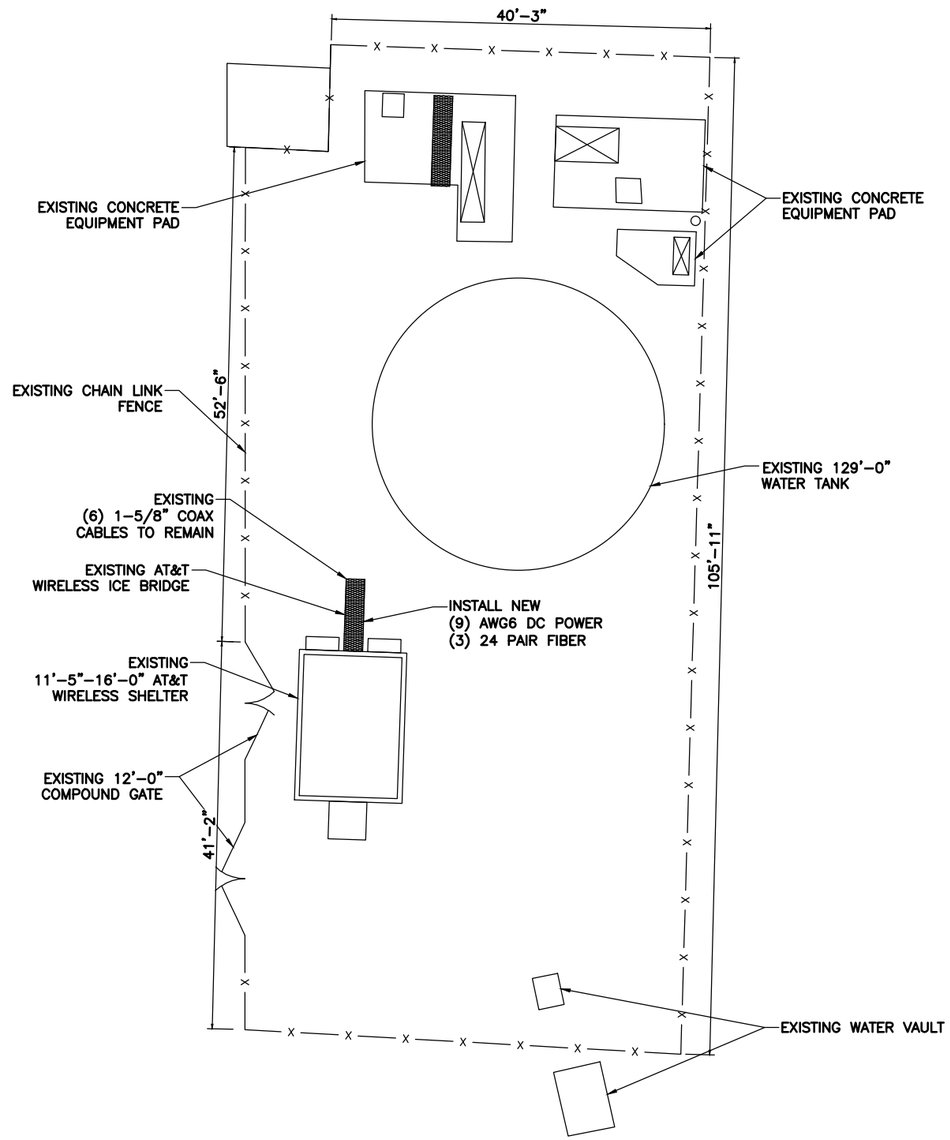

1 DETAILED SITE PLAN
SCALE: 1/8" = 1'-0"

N

11"x17" SCALE: 1/16" = 1'-0"
22"x34" SCALE: 1/8" = 1'-0"

0 8' 16' 32'
0 4' 8' 16'

PREPARED BY:

NEXIUS SOLUTIONS, INC.
2595 NORTH DALLAS PARKWAY
SUITE 300
FRISCO, TX 75034

CLIENT:

AT&T Mobility

1700 CANTRELL ROAD,
LITTLE ROCK, AR 72223

LICENSED PROFESSIONAL ENGINEER
JACK T. PHIPPS
11626
OKLAHOMA

PE RENEWAL 10/31/22
DATE SIGN 06/24/2
NEXIUS SOLUTIONS, INC.
OKLAHOMA FIRM NUMBER 7540
RENEWAL DATE 06/30/23

NEXIUS SOLUTIONS, INC. IS REGISTERED IN OK

FOR CONSTRUCTION

SUBMITTALS

REV	DATE	DESCRIPTION	BY
A	01/18/22	CD FOR REVIEW	WF
0	06/24/22	FINAL CD	WF

SITE INFORMATION:

SITE NAME:
CASADY SQUARE

SITE NUMBER:
OKL01652

SITE ADDRESS:
1849 EAST WESTMINSTER PLACE
OKLAHOMA CITY, OK 73120

SITE COORDINATES:
35.558642° / -97.558022°

SHEET TITLE:
DETAILED SITE PLAN

SHEET NUMBER:
C-2

THIS DOCUMENT IS THE DESIGN PROPERTY AND COPYRIGHT OF NEXIUS AND FOR THE EXCLUSIVE USE BY THE TITLE CLIENT. DUPLICATION OR USE WITHOUT THE EXPRESS WRITTEN CONSENT OF THE CREATOR IS STRICTLY PROHIBITED. DRAWING SCALES ARE INTENDED FOR 22"x34" SIZE PRINTED MEDIA ONLY. 11"x17" IS DEEMED HALF SCALE, AND ALL OTHER PRINTED SIZES ARE DEEMED "NOT TO SCALE".

Attachment: 1 PC-2022-04 Packet (5951 : AT&T - Special Permit Application)

DocuSign Envelope ID: 984E5229-2133-4203-B004-EF0739353D77

RRH BREAKER SCHEDULE					
RRH MANUFACTURER	RRH MODEL	BREAKER SIZE	DC POWER CONSUMPTION	BREAKER AT&T ITEM# VERTIV/ EMERSON	BREAKER AT&T ITEM# WHITE HANDLE	BREAKER QUANTITY
ERICSSON	4449 B5/B12	25 AMP	1,440 W	NEQ.00710		6
ERICSSON	AIR 6449 N77D	50 AMP	1,280 W	NEQ.00710		3
ERICSSON	AIR 6419 N77G	25 AMP	1,280 W	NEQ.00710		3

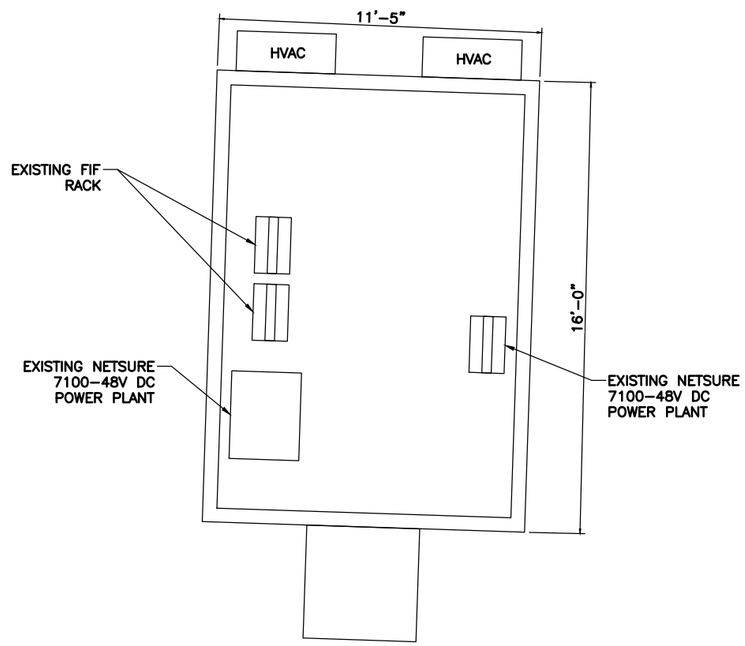

1 SHELTER SITE PLAN
SCALE: 3/8" = 1'–0"

N

11"x17" SCALE: 3/16" = 1'–0" 0 2'–8" 5'–4" 10'–8"
22"x34" SCALE: 3/8" = 1'–0" 0 1'–4" 2'–8" 5'–4"

PREPARED BY:

NEXIUS SOLUTIONS, INC.
2595 NORTH DALLAS PARKWAY
SUITE 300
FRISCO, TX 75034

CLIENT:

AT&T Mobility
1700 CANTRELL ROAD,
LITTLE ROCK, AR 72223

LICENSED PROFESSIONAL ENGINEER
JACK T. PHIPPS
11626
OKLAHOMA

PE RENEWAL 10/31/22 NEXIUS SOLUTIONS, INC. OKLAHOMA FIRM NUMBER 7540 RENEWAL DATE 06/30/23 DATE SIGN 06/24/2

NEXIUS SOLUTIONS, INC. IS REGISTERED IN OK

FOR CONSTRUCTION

SUBMITTALS

REV	DATE	DESCRIPTION	BY
A	01/18/22	CD FOR REVIEW	WF
0	06/24/22	FINAL CD	WF

SITE INFORMATION:

SITE NAME:
CASADY SQUARE

SITE NUMBER:
OKL01652

SITE ADDRESS:
1849 EAST WESTMINSTER PLACE
OKLAHOMA CITY, OK 73120

SITE COORDINATES:
35.558642° / –97.558022°

SHEET TITLE:
SHELTER SITE PLAN

SHEET NUMBER:
C-3

Attachment: 1 PC-2022-04 Packet (5951 : AT&T - Special Permit Application)

THIS DOCUMENT IS THE DESIGN PROPERTY AND COPYRIGHT OF NEXIUS AND FOR THE EXCLUSIVE USE BY THE TITLE CLIENT. DUPLICATION OR USE WITHOUT THE EXPRESS WRITTEN CONSENT OF THE CREATOR IS STRICTLY PROHIBITED. DRAWING SCALES ARE INTENDED FOR 22"x34" SIZE PRINTED MEDIA ONLY. 11"x17" IS DEEMED HALF SCALE, AND ALL OTHER PRINTED SIZES ARE DEEMED "NOT TO SCALE".

DocuSign Envelope ID: 984E5229-2133-4203-B004-EF0739353D77

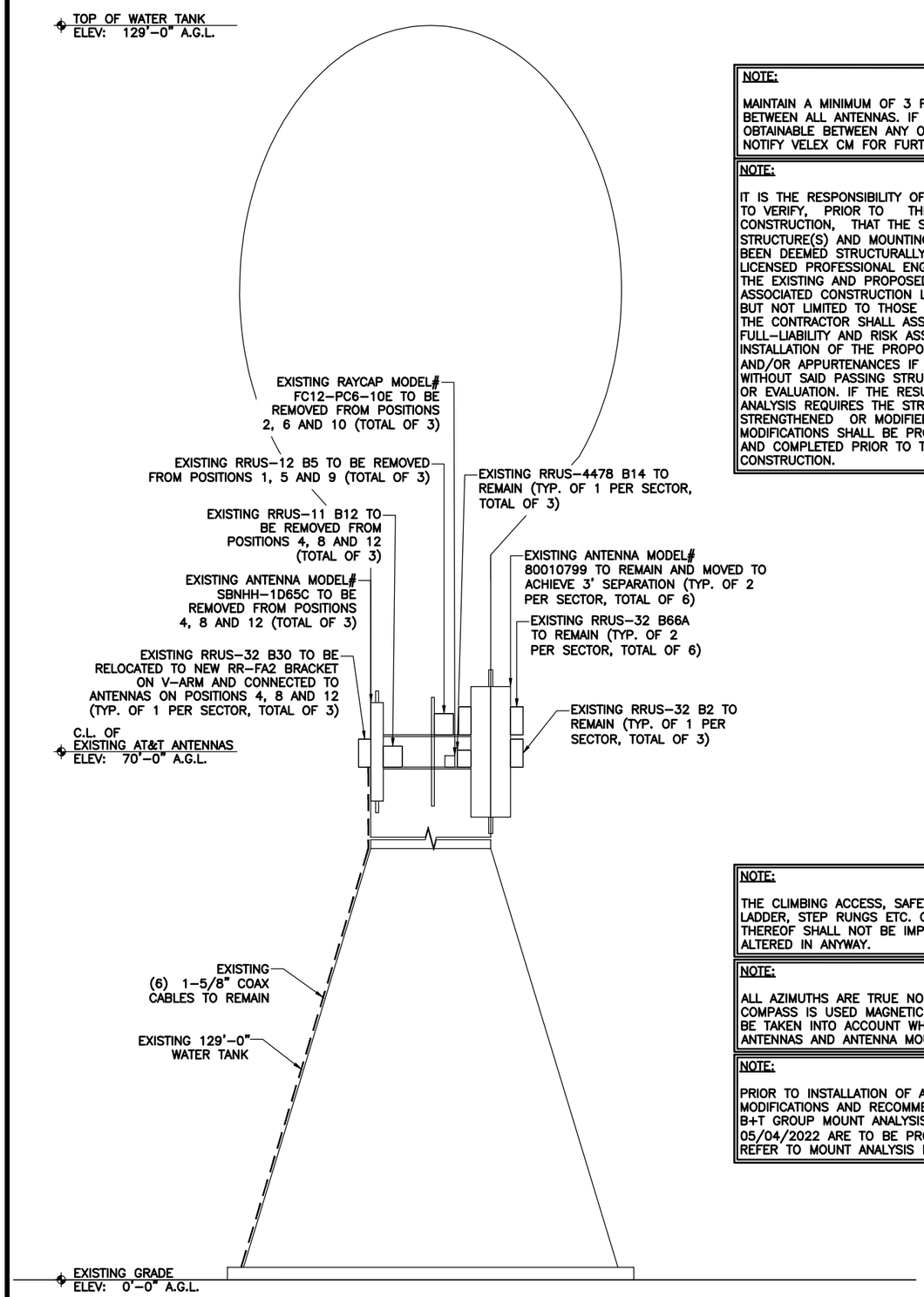

1 TOWER ELEVATION (EXISTING)
SCALE: 3/16" = 1'-0"

11"x17" SCALE: 3/32" = 1'-0"
22"x34" SCALE: 3/16" = 1'-0"
0 5'-4" 10'-8" 21'-4"
0 2'-8" 5'-4" 10'-8"

NOTE:

MAINTAIN A MINIMUM OF 3 FEET SEPARATION BETWEEN ALL ANTENNAS. IF 3 FEET IS NOT OBTAINABLE BETWEEN ANY OF THE ANTENNAS, NOTIFY VELEX CM FOR FURTHER DIRECTION.

NOTE:

IT IS THE RESPONSIBILITY OF THE CONTRACTOR TO VERIFY, PRIOR TO THE ONSET OF CONSTRUCTION, THAT THE SUPPORTING STRUCTURE(S) AND MOUNTING SYSTEM(S) HAVE BEEN DEEMED STRUCTURALLY ADEQUATE BY A LICENSED PROFESSIONAL ENGINEER TO SUPPORT THE EXISTING AND PROPOSED EQUIPMENT AND ASSOCIATED CONSTRUCTION LOADS, INCLUDING BUT NOT LIMITED TO THOSE DEPICTED, HEREIN. THE CONTRACTOR SHALL ASSUME THE FULL-LIABILITY AND RISK ASSOCIATED WITH THE INSTALLATION OF THE PROPOSED EQUIPMENT AND/OR APPURTENANCES IF PERFORMED WITHOUT SAID PASSING STRUCTURAL ANALYSIS OR EVALUATION. IF THE RESULT OF THE ANALYSIS REQUIRES THE STRUCTURE BE STRENGTHENED OR MODIFIED; SUCH MODIFICATIONS SHALL BE PROPERLY INSTALLED AND COMPLETED PRIOR TO THE ONSET OF CONSTRUCTION.

NOTE:

THE CLIMBING ACCESS, SAFETY CLIMB, CLIMBING LADDER, STEP RUNGS ETC. OR ANY PARTS THEREOF SHALL NOT BE IMPEDED, MODIFIED OR ALTERED IN ANYWAY.

NOTE:

ALL AZIMUTHS ARE TRUE NORTH. IF A MAGNETIC COMPASS IS USED MAGNETIC DECLINATION MUST BE TAKEN INTO ACCOUNT WHEN ALIGNING ANTENNAS AND ANTENNA MOUNTS.

NOTE:

PRIOR TO INSTALLATION OF ANY EQUIPMENT, ALL MODIFICATIONS AND RECOMMENDATIONS AS PER B+T GROUP MOUNT ANALYSIS DATED 05/04/2022 ARE TO BE PROPERLY INSTALLED. REFER TO MOUNT ANALYSIS FOR DETAILS

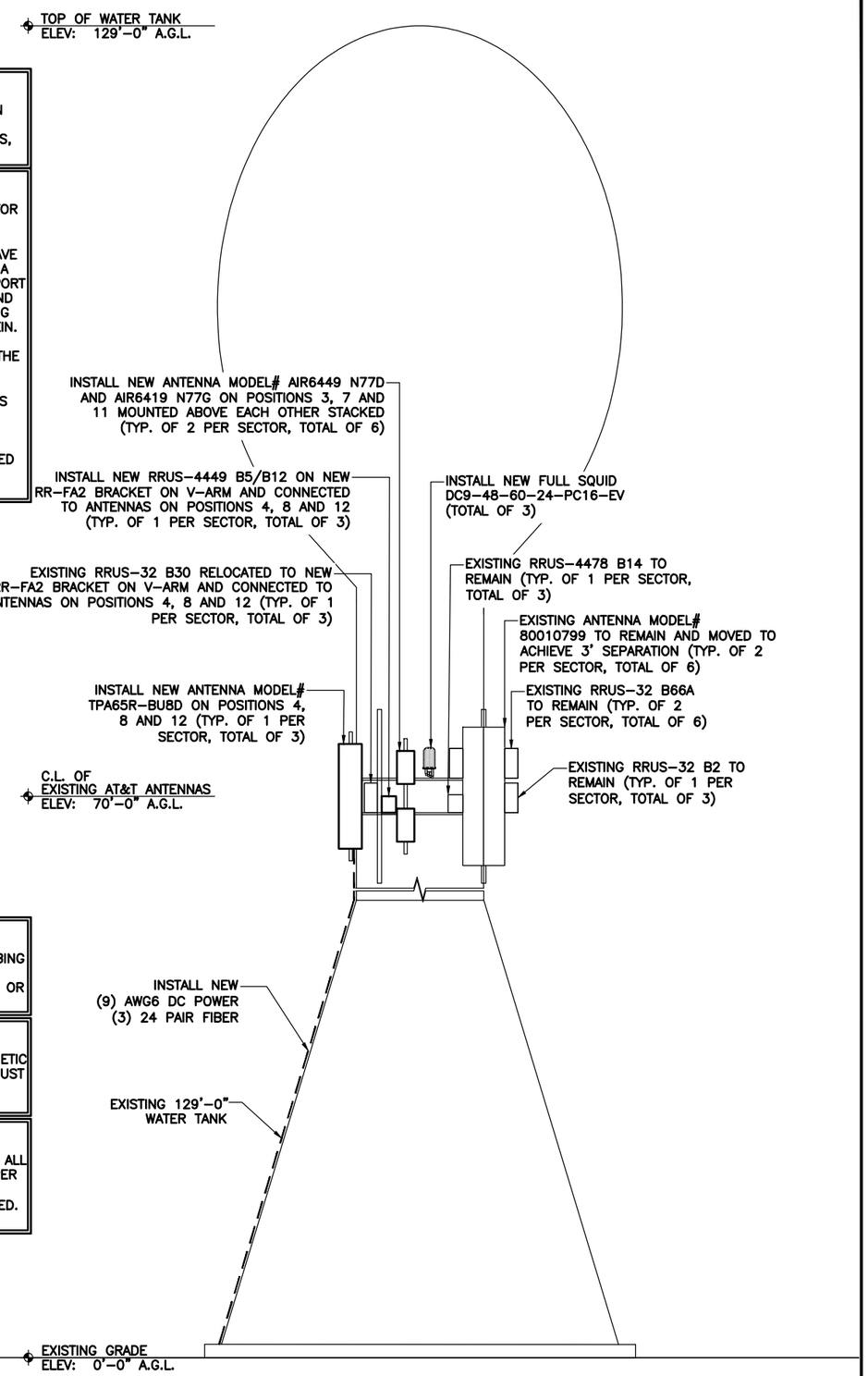

2 TOWER ELEVATION (PROPOSED)
SCALE: 3/16" = 1'-0"

11"x17" SCALE: 3/32" = 1'-0"
22"x34" SCALE: 3/16" = 1'-0"
0 5'-4" 10'-8" 21'-4"
0 2'-8" 5'-4" 10'-8"

PREPARED BY:

nexius
NEXIUS SOLUTIONS, INC.
2595 NORTH DALLAS PARKWAY
SUITE 300
FRISCO, TX 75034

CLIENT:

AT&T Mobility
1700 CANTRELL ROAD,
LITTLE ROCK, AR 72223

LICENSED PROFESSIONAL ENGINEER
JACK T. PHIPPS
11626
OKLAHOMA

PE RENEWAL 10/31/22 NEXIUS SOLUTIONS, INC. OKLAHOMA FIRM NUMBER 7540 RENEWAL DATE 06/30/23 DATE SIGN 06/24/

NEXIUS SOLUTIONS, INC. IS REGISTERED IN OK

FOR CONSTRUCTION

SUBMITTALS

REV	DATE	DESCRIPTION	BY
A	01/18/22	CD FOR REVIEW	WF
0	06/24/22	FINAL CD	WF

SITE INFORMATION:

SITE NAME:
CASADY SQUARE

SITE NUMBER:
OKL01652

SITE ADDRESS:
1849 EAST WESTMINSTER PLACE
OKLAHOMA CITY, OK 73120

SITE COORDINATES:
35.558642° / -97.558022°

SHEET TITLE:
TOWER ELEVATIONS

SHEET NUMBER:
C-4

THIS DOCUMENT IS THE DESIGN PROPERTY AND COPYRIGHT OF NEXIUS AND FOR THE EXCLUSIVE USE BY THE TITLE CLIENT. DUPLICATION OR USE WITHOUT THE EXPRESS WRITTEN CONSENT OF THE CREATOR IS STRICTLY PROHIBITED. DRAWING SCALES ARE INTENDED FOR 22"x34" SIZE PRINTED MEDIA ONLY. 11"x17" IS DEEMED HALF SCALE, AND ALL OTHER PRINTED SIZES ARE DEEMED "NOT TO SCALE".

Attachment: 1 PC-2022-04 Packet (5951 : AT&T - Special Permit Application)

DocuSign Envelope ID: 984E5229-2133-4203-B004-EF0739353D77

THE DESIGN SHOWN ON THESE DRAWINGS IS BASED ON INFORMATION GATHERED FROM AT&T RFDS AT&T RFDS V2021_1.00 DATED 10/26/2021.

EXISTING

SECTOR	ANTENNA TECHNOLOGY	ANTENNA POSITION	MODEL	RAD CENTER (AGL)	AZIMUTH	COAX CABLES	OTHER CABLES	TMA'S	TOWER DIPLEXERS	RRU'S	OTHER DEVICES
ALPHA	LTE-700 / UMTS-850 / 1900 / AWS	#1	(2) 80010799	70'-0"	30°	(6) 1-5/8" COAX	N/A	N/A	N/A	(1) 4478 B14 (1) RRUS-12 B5 (1) RRUS-32 B2 (2) RRUS-32 B66A	(3) FC12-PC6-10E
	N/A	#2	N/A					N/A	N/A	N/A	
	N/A	#3	N/A					N/A	N/A	N/A	
	LTE-700 / WCS	#4	(1) SBNHH-1D65C					N/A	N/A	(1) RRUS-11 B12 (1) RRUS-32 B30	
BETA	LTE-700 / UMTS-850 / 1900 / AWS	#5	(2) 80010799	70'-0"	150°			N/A	N/A	(1) 4478 B14 (1) RRUS-12 B5 (1) RRUS-32 B2 (2) RRUS-32 B66A	
	N/A	#6	N/A					N/A	N/A	N/A	
	N/A	#7	N/A					N/A	N/A	N/A	
	LTE-700 / WCS	#8	(1) SBNHH-1D65C					N/A	N/A	(1) RRUS-11 B12 (1) RRUS-32 B30	
GAMMA	LTE-700 / UMTS-850 / 1900 / AWS	#9	(2) 80010799	70'-0"	260°			N/A	N/A	(1) 4478 B14 (1) RRUS-12 B5 (1) RRUS-32 B2 (2) RRUS-32 B66A	
	N/A	#10	N/A					N/A	N/A	N/A	
	N/A	#11	N/A					N/A	N/A	N/A	
	LTE-700 / WCS	#12	(1) SBNHH-1D65C					N/A	N/A	(1) RRUS-11 B12 (1) RRUS-32 B30	

PROPOSED

SECTOR	ANTENNA TECHNOLOGY	ANTENNA POSITION	MODEL	RAD CENTER (AGL)	AZIMUTH	COAX CABLES	OTHER CABLES	TMA'S	TOWER DIPLEXERS	RRU'S	OTHER DEVICES
ALPHA	LTE-700 / 5G-1900 / AWS	#1	(2) 80010799	70'-0"	30°	(6) 1-5/8" COAX (CAN BE REMOVED IF ATT APPROVES)	(9) AWG6 DC POWER (3) 24 PAIR FIBER	N/A	N/A	(1) 4478 B14 (1) RRUS-32 B2 (2) RRUS-32 B66A	(3) DC9-48-60-24-PC16-EV
	N/A	#2	N/A					N/A	N/A	N/A	
	5G-CBAND	#3	(1) AIR6449 N77D (1) AIR6419 N77G					N/A	N/A	N/A	
	LTE-700 / 5G-850 / WCS	#4	(1) TPA65R-BU8D					N/A	N/A	(1) 4449 B5/B12 (1) RRUS-32 B30	
BETA	LTE-700 / 5G-1900 / AWS	#5	(2) 80010799	70'-0"	150°			N/A	N/A	(1) 4478 B14 (1) RRUS-32 B2 (2) RRUS-32 B66A	
	N/A	#6	N/A					N/A	N/A	N/A	
	5G-CBAND	#7	(1) AIR6449 N77D (1) AIR6419 N77G					N/A	N/A	N/A	
	LTE-700 / 5G-850 / WCS	#8	(1) TPA65R-BU8D					N/A	N/A	(1) 4449 B5/B12 (1) RRUS-32 B30	
GAMMA	LTE-700 / 5G-1900 / AWS	#9	(2) 80010799	70'-0"	260°			N/A	N/A	(1) 4478 B14 (1) RRUS-32 B2 (2) RRUS-32 B66A	
	N/A	#10	N/A					N/A	N/A	N/A	
	5G-CBAND	#11	(1) AIR6449 N77D (1) AIR6419 N77G					N/A	N/A	N/A	
	LTE-700 / 5G-850 / WCS	#12	(1) TPA65R-BU8D					N/A	N/A	(1) 4449 B5/B12 (1) RRUS-32 B30	

PREPARED BY:
nexius
NEXIUS SOLUTIONS, INC.
2595 NORTH DALLAS PARKWAY
SUITE 300
FRISCO, TX 75034

CLIENT:
AT&T Mobility
1700 CANTRELL ROAD,
LITTLE ROCK, AR 72223

LICENSED PROFESSIONAL ENGINEER
JACK T. PHIPPS
11626
OKLAHOMA

PE RENEWAL 10/31/22
NEXIUS SOLUTIONS, INC.
OKLAHOMA FIRM NUMBER 7540
RENEWAL DATE 06/30/23
DATE SIGN 06/24/2

NEXIUS SOLUTIONS, INC. IS REGISTERED IN OK

FOR CONSTRUCTION

SUBMITTALS

REV	DATE	DESCRIPTION	BY
A	01/18/22	CD FOR REVIEW	WF
0	06/24/22	FINAL CD	WF

SITE INFORMATION:

SITE NAME:
CASADY SQUARE

SITE NUMBER:
OKL01652

SITE ADDRESS:
1849 EAST WESTMINSTER PLACE
OKLAHOMA CITY, OK 73120

SITE COORDINATES:
35.558642° / -97.558022°

SHEET TITLE:
RF SCHEDULE

SHEET NUMBER:
RF-1

Attachment: 1 PC-2022-04 Packet (5951 : AT&T - Special Permit Application)

THIS DOCUMENT IS THE DESIGN PROPERTY AND COPYRIGHT OF NEXIUS AND FOR THE EXCLUSIVE USE BY THE TITLE CLIENT. DUPLICATION OR USE WITHOUT THE EXPRESS WRITTEN CONSENT OF THE CREATOR IS STRICTLY PROHIBITED. DRAWING SCALES ARE INTENDED FOR 22"x34" SIZE PRINTED MEDIA ONLY. 11"x17" IS DEEMED HALF SCALE, AND ALL OTHER PRINTED SIZES ARE DEEMED "NOT TO SCALE".

DocuSign Envelope ID: 984E5229-2133-4203-B004-EF0739353D77

NOTES:

1. THIS PLAN WAS CREATED BASED ON INFORMATION GATHERED FROM PREVIOUS DRAWINGS, AERIAL PHOTOGRAPHY, GIS DATA AND/OR ASSESSOR MAPS. THIS PLAN IS IN NO WAY INTENDED TO BE USED AS A BOUNDARY SURVEY.
2. THE CLIMBING ACCESS, SAFETY CLIMB, CLIMBING LADDER, STEP RUNGS ETC. OR ANY PARTS THEREOF SHALL NOT BE IMPEDED, MODIFIED OR ALTERED IN ANYWAY.

NOTE:

MAINTAIN A MINIMUM OF 3 FEET SEPARATION BETWEEN ALL ANTENNAS. IF 3 FEET IS NOT OBTAINABLE BETWEEN ANY OF THE ANTENNAS, NOTIFY VELEX CM FOR FURTHER DIRECTION.

NOTE:

PRIOR TO INSTALLATION OF ANY EQUIPMENT, ALL MODIFICATIONS AND RECOMMENDATIONS AS PER B+T GROUP MOUNT ANALYSIS DATED 05/04/2022 ARE TO BE PROPERLY INSTALLED. REFER TO MOUNT ANALYSIS FOR DETAILS

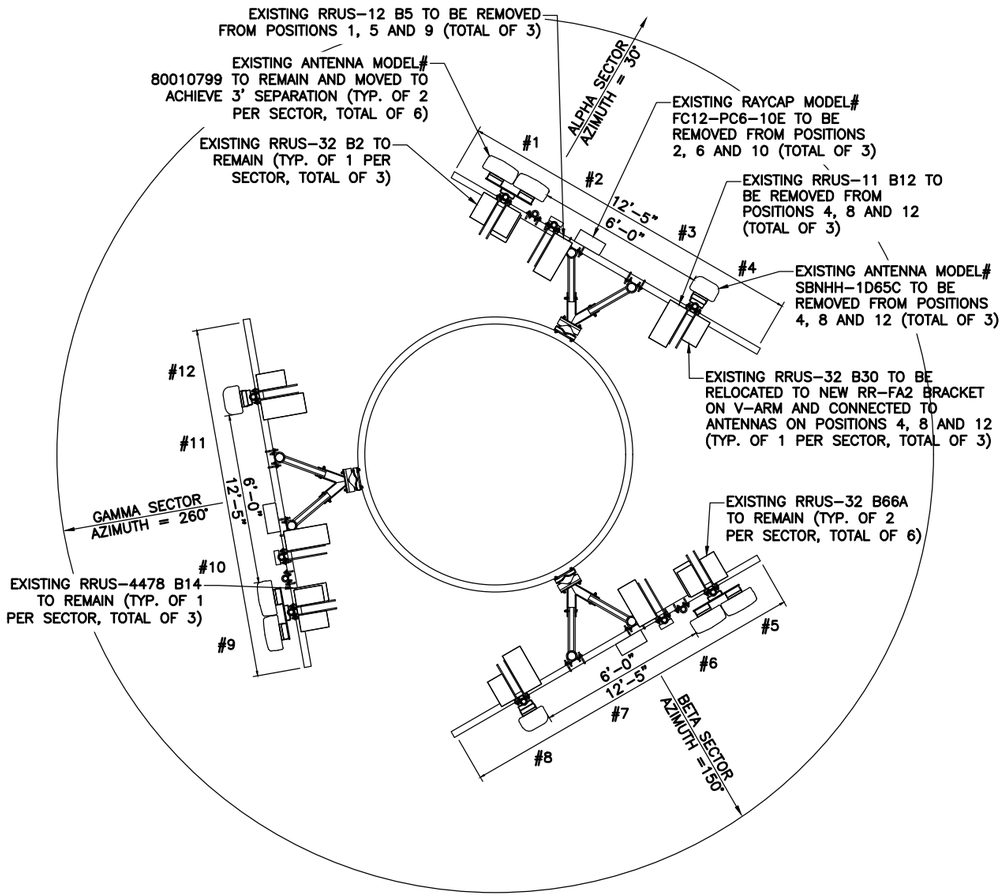

1 ANTENNA PLAN (EXISTING)
SCALE: 3/8" = 1'-0"

11"x17" SCALE: 3/16" = 1'-0"
22"x34" SCALE: 3/8" = 1'-0"
0 2'-8" 5'-4" 10'-8"
0 1'-4" 2'-8" 5'-4"

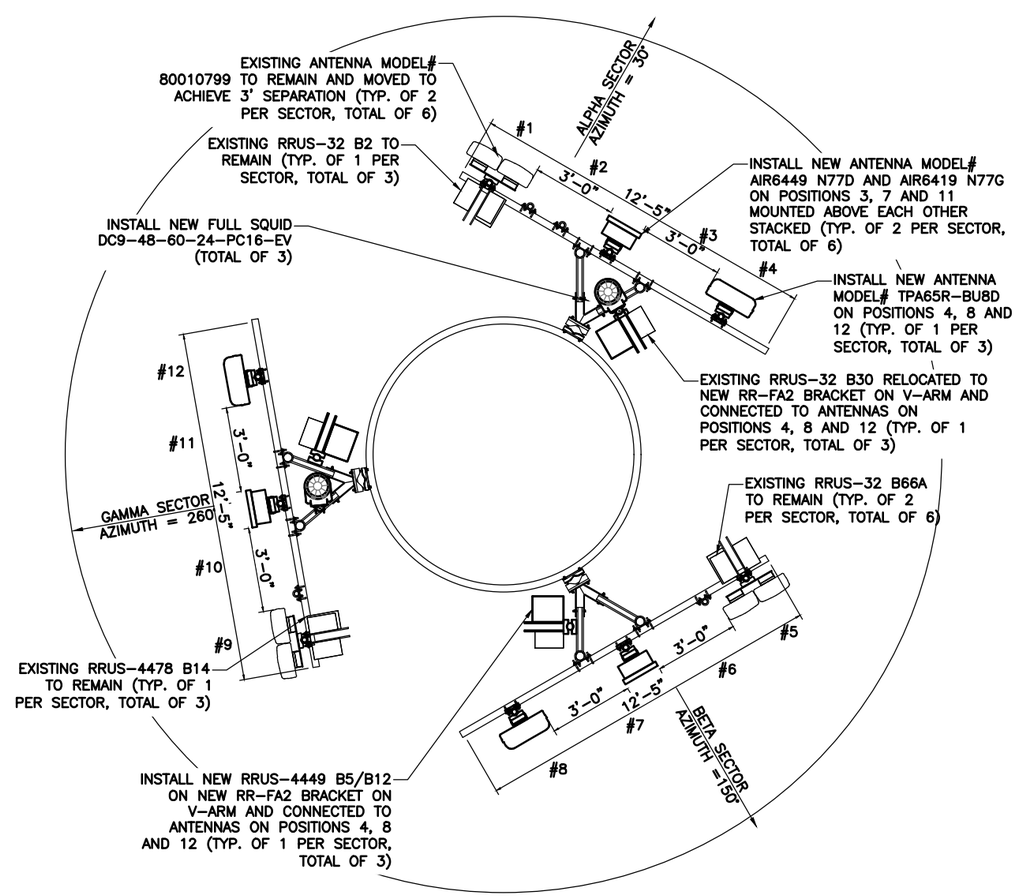

2 ANTENNA PLAN (PROPOSED)
SCALE: 3/8" = 1'-0"

11"x17" SCALE: 3/16" = 1'-0"
22"x34" SCALE: 3/8" = 1'-0"
0 2'-8" 5'-4" 10'-8"
0 1'-4" 2'-8" 5'-4"

N

PREPARED BY:

nexius

NEXIUS SOLUTIONS, INC.
2595 NORTH DALLAS PARKWAY
SUITE 300
FRISCO, TX 75034

CLIENT:

AT&T Mobility

1700 CANTRELL ROAD,
LITTLE ROCK, AR 72223

LICENSED PROFESSIONAL ENGINEER
JACK T. PHIPPS
11626
OKLAHOMA

PE RENEWAL 10/31/22
NEXIUS SOLUTIONS, INC.
OKLAHOMA FIRM NUMBER 7540
RENEWAL DATE 06/30/23
DATE SIGN 06/24/2

NEXIUS SOLUTIONS, INC. IS REGISTERED IN OK

FOR CONSTRUCTION

SUBMITTALS

REV	DATE	DESCRIPTION	BY
A	01/18/22	CD FOR REVIEW	WF
0	06/24/22	FINAL CD	WF

SITE INFORMATION:

SITE NAME:
CASADY SQUARE

SITE NUMBER:
OKL01652

SITE ADDRESS:
1849 EAST WESTMINSTER PLACE
OKLAHOMA CITY, OK 73120

SITE COORDINATES:
35.558642° / -97.558022°

SHEET TITLE:
ANTENNA SECTOR PLAN

SHEET NUMBER:
RF-2

THIS DOCUMENT IS THE DESIGN PROPERTY AND COPYRIGHT OF NEXIUS AND FOR THE EXCLUSIVE USE BY THE TITLE CLIENT. DUPLICATION OR USE WITHOUT THE EXPRESS WRITTEN CONSENT OF THE CREATOR IS STRICTLY PROHIBITED. DRAWING SCALES ARE INTENDED FOR 22"x34" SIZE PRINTED MEDIA ONLY. 11"x17" IS DEEMED HALF SCALE, AND ALL OTHER PRINTED SIZES ARE DEEMED "NOT TO SCALE".

Attachment: 1 PC-2022-04 Packet (5951 : AT&T - Special Permit Application)

DocuSign Envelope ID: 984E5229-2133-4203-B004-EF0739353D77

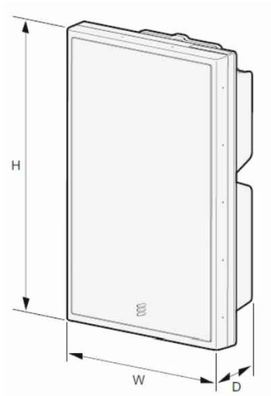

ERICSSON AIR6449	
DIMENSIONS (HxWxD)	32.24"x15.9"x8.1"
WEIGHT	73.6 lbs.

1 ERICSSON – AIR6449 N77D
N.T.S.

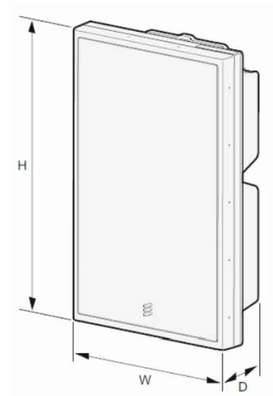

ERICSSON AIR6419	
DIMENSIONS (HxWxD)	32.24"x15.9"x8.1"
WEIGHT	73.6 lbs.

2 ERICSSON – AIR6419 N77G
N.T.S.

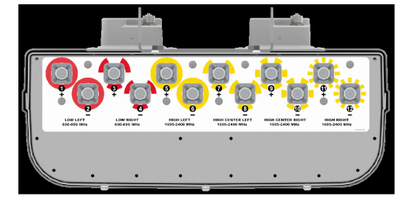

TPA–65R–BU8DA–K	
DIMENSIONS (HxWxD)	96.0"x21.0"x7.8"
WEIGHT	87.5 lbs.

3 TPA–65R–BU8DA–K DETAIL
N.T.S.

RAYCAP DC9–48–60–24–8C–EV	
DIMENSIONS (Hxø)	31.4"x10.24"
WEIGHT	26.2 lbs.

4 RAYCAP – DC9–48–60–24–8C–EV
N.T.S.

ERICSSON RRUS–4449 B5 / B12	
DIMENSIONS (HxWxD)	17.9"x13.2"x9.44"
WEIGHT	71 lbs.

5 ERICSSON – RRUS–4449 B5/B12
N.T.S.

RRU BRACKET RR–FA2	
DIMENSIONS (HxWxD)	22.7"x8.6"x5.5/8"
WEIGHT	40.8 lbs.
ITEM NUMBER	CEQ.14936

6 RRU BRACKET RR–FA2
N.T.S.

PREPARED BY:
nexius
NEXIUS SOLUTIONS, INC.
2595 NORTH DALLAS PARKWAY
SUITE 300
FRISCO, TX 75034

CLIENT:
AT&T Mobility
1700 CANTRELL ROAD,
LITTLE ROCK, AR 72223

LICENSED PROFESSIONAL ENGINEER
JACK T. PHIPPS
11626
OKLAHOMA

PE RENEWAL 10/31/22
NEXIUS SOLUTIONS, INC.
OKLAHOMA FIRM NUMBER 7540
RENEWAL DATE 06/30/23
DATE SIGN 06/24/2

NEXIUS SOLUTIONS, INC. IS REGISTERED IN OK

FOR CONSTRUCTION

SUBMITTALS

REV	DATE	DESCRIPTION	BY
A	01/18/22	CD FOR REVIEW	WI
0	06/24/22	FINAL CD	WI

SITE INFORMATION:

SITE NAME:
CASADY SQUARE

SITE NUMBER:
OKL01652

SITE ADDRESS:
1849 EAST WESTMINSTER PLACE
OKLAHOMA CITY, OK 73120

SITE COORDINATES:
35.558642° / –97.558022°

SHEET TITLE:
EQUIPMENT DETAILS

SHEET NUMBER:
EQ-1

Attachment: 1 PC-2022-04 Packet (5951 : AT&T - Special Permit Application)

THIS DOCUMENT IS THE DESIGN PROPERTY AND COPYRIGHT OF NEXIUS AND FOR THE EXCLUSIVE USE BY THE TITLE CLIENT. DUPLICATION OR USE WITHOUT THE EXPRESS WRITTEN CONSENT OF THE CREATOR IS STRICTLY PROHIBITED. DRAWING SCALES ARE INTENDED FOR 22"x34" SIZE PRINTED MEDIA ONLY. 11"x17" IS DEEMED HALF SCALE, AND ALL OTHER PRINTED SIZES ARE DEEMED "NOT TO SCALE".

DocuSign Envelope ID: 984E5229-2133-4203-B004-EF0739353D77

GENERAL CONSTRUCTION

1. ALL SITE WORK SHALL BE COMPLETED AS INDICATED ON THE DRAWINGS AND PROJECT SPECIFICATIONS.
2. GENERAL CONTRACTOR SHALL VISIT THE SITE AND FAMILIARIZE HIMSELF WITH ALL CONDITIONS AFFECTING THE PROPOSED WORK. GENERAL CONTRACTOR IS RESPONSIBLE FOR FAMILIARIZING HIMSELF WITH ALL CONTRACT DOCUMENTS, FIELD CONDITIONS, DIMENSIONS, AND CONFIRMING THAT THE WORK MAY BE ACCOMPLISHED AS SHOWN PRIOR TO PROCEEDING WITH CONSTRUCTION. ANY DISCREPANCIES SHALL BE BROUGHT TO THE ATTENTION OF THE ENGINEER PRIOR TO THE COMMENCEMENT OF WORK.
3. ALL MATERIALS FURNISHED AND INSTALLED SHALL BE IN STRICT ACCORDANCE WITH ALL APPLICABLE CODES, REGULATIONS, ORDINANCES, AND ISSUE ALL APPROPRIATE NOTICES.
4. ALL WORK CARRIED OUT SHALL COMPLY WITH ALL APPLICABLE MUNICIPAL AND UTILITY COMPANY SPECIFICATIONS AND LOCAL JURISDICTIONAL CODES, ORDINANCES, AND APPLICABLE REGULATIONS.
5. PLANS ARE NOT TO BE SCALED. SPACING BETWEEN EQUIPMENT IS THE MINIMUM REQUIRED CLEARANCE. THEREFORE, IT IS CRITICAL TO FIELD VERIFY DIMENSIONS, SHOULD THERE BE ANY QUESTIONS REGARDING THE CONTRACT DOCUMENTS, THE CONTRACTOR SHALL BE RESPONSIBLE FOR OBTAINING A CLARIFICATION FROM THE ENGINEER PRIOR TO PROCEEDING WITH THE WORK. DETAILS ARE INTENDED TO SHOW DESIGN INTENT. MODIFICATIONS MAY BE REQUIRED TO SUIT JOB DIMENSIONS OR CONDITIONS AND SUCH MODIFICATIONS SHALL BE INCLUDED AS PART OF WORK AND PREPARED BY THE ENGINEER PRIOR TO PROCEEDING WITH WORK.
6. THE CONTRACTOR SHALL INSTALL ALL EQUIPMENT AND MATERIALS IN ACCORDANCE WITH MANUFACTURER'S RECOMMENDATIONS UNLESS SPECIFICALLY STATED OTHERWISE.
7. IF THE SPECIFIED EQUIPMENT CANNOT BE INSTALLED AS SHOWN ON THESE DRAWINGS, THE CONTRACTOR SHALL PROPOSE AN ALTERNATIVE INSTALLATION SPACE FOR APPROVAL BY THE ENGINEER PRIOR TO PROCEEDING.
8. CONTRACTOR SHALL NOTIFY THE GENERAL CONTRACTOR OF ANY EXISTING CONDITIONS THAT DEVIATE FROM THE DRAWINGS PRIOR TO BEGINNING CONSTRUCTION.
9. GENERAL CONTRACTOR SHALL BE RESPONSIBLE FOR THE SAFETY OF WORK AREA, ADJACENT AREAS AND BUILDING OCCUPANTS THAT ARE LIKELY TO BE AFFECTED BY THE WORK UNDER THIS CONTRACT. WORK SHALL CONFIRM TO ALL OSHA REQUIREMENTS AND THE LOCAL JURISDICTION.
10. GENERAL CONTRACTOR SHALL COORDINATE WORK AND SCHEDULE WORK ACTIVITIES WITH OTHER DISCIPLINES.
11. WORK SHALL BE DONE IN A PROFESSIONAL MANNER BY COMPETENT EXPERIENCED PERSONNEL IN ACCORDANCE WITH APPLICABLE CODES AND THE BEST ACCEPTED PRACTICE.
12. SEAL PENETRATIONS THROUGH FIRE RATED AREAS WITH UL LISTED MATERIALS APPROVED BY LOCAL JURISDICTION. CONTRACTOR SHALL KEEP AREA CLEAN, HAZARD FREE, AND DISPOSE OF ALL DEBRIS.
13. CONTRACTOR SHALL PROVIDE WRITTEN NOTICE TO THE CONSTRUCTION MANAGER 48 HOURS PRIOR TO COMMENCEMENT OF WORK.
14. THE CONTRACTOR SHALL PROTECT EXISTING IMPROVEMENTS, PAVEMENTS, CURBS, LANDSCAPING AND STRUCTURES. ANY DAMAGED PART SHALL BE REPAIRED AT CONTRACTOR'S EXPENSE TO THE SATISFACTION OF THE OWNER.
15. THE CONTRACTOR SHALL CONTACT UTILITY LOCATING SERVICES PRIOR TO THE START OF CONSTRUCTION.
16. GENERAL CONTRACTOR SHALL COORDINATE AND MAINTAIN ACCESS FOR ALL TRADES AND CONTRACTORS TO THE SITE AND/OR BUILDING.
17. THE GENERAL CONTRACTOR SHALL BE RESPONSIBLE FOR SECURITY OF THE SITE FOR THE DURATION OF CONSTRUCTION UNTIL JOB COMPLETION.
18. CONTRACTORS SHALL BE RESPONSIBLE FOR OBTAINING ALL PERMITS AND INSPECTIONS REQUIRED FOR CONSTRUCTION. IF CONTRACTOR CANNOT OBTAIN A PERMIT, THEY MUST NOTIFY THE GENERAL CONTRACTOR IMMEDIATELY.
19. THE GENERAL CONTRACTOR SHALL MAINTAIN IN GOOD CONDITION ONE COMPLETE SET OF PLANS WITH ALL REVISIONS, ADDENDA, AND CHANGE ORDERS ON THE PREMISES AT ALL TIMES.
20. THE GENERAL CONTRACTOR SHALL PROVIDE PORTABLE FIRE EXTINGUISHERS WITH A RATING OF NOT LESS THAN 2-A TO 2-A:10-B:C AND SHALL BE WITHIN 25 FEET OF TRAVEL DISTANCE TO ALL PORTIONS OF WHERE THE WORK IS BEING COMPLETED DURING CONSTRUCTION.
21. ALL EXISTING ACTIVE SEWER, WATER, GAS, ELECTRIC, COMMUNICATIONS, AND OTHER UTILITIES SHALL BE PROTECTED AT ALL TIMES, AND WHERE REQUIRED FOR THE PROPER EXECUTION OF THE WORK, SHALL BE RELOCATED AS DIRECTED BY THE ENGINEER. EXTREME CAUTION SHOULD BE USED BY THE CONTRACTOR WHEN EXCAVATING OR DRILLING PIERS AROUND OR NEAR UTILITIES. CONTRACTOR SHALL PROVIDE SAFETY TRAINING FOR THE WORKING CREW. THIS SHALL INCLUDE BUT NOT BE LIMITED TO: FALL PROTECTION, CONFINED SPACE, ELECTRICAL SAFETY, AND TRENCHING / EXCAVATION.
22. ALL EXISTING INACTIVE SEWER, WATER, GAS, ELECTRIC, AND OTHER UTILITIES WHICH INTERFERE WITH THE EXECUTION OF THE WORK, SHALL BE REMOVED, CAPPED, PLUGGED OR OTHERWISE DISCONNECTED AT POINTS WHICH WILL NOT INTERFERE WITH THE EXECUTION OF THE WORK, AS DIRECTED BY THE RESPONSIBLE ENGINEER, AND SUBJECT TO THE APPROVAL OF THE OWNER AND/OR LOCAL UTILITIES.
23. CONTRACTOR SHALL MINIMIZE DISTURBANCE TO THE EXISTING SITE DURING CONSTRUCTION. EROSION CONTROL MEASURES, IF REQUIRED DURING CONSTRUCTION, SHALL BE IN CONFORMANCE WITH THE FEDERAL AND LOCAL JURISDICTION FOR EROSION AND SEDIMENT CONTROL.
24. THE AREAS OF THE OWNER'S PROPERTY DISTURBED BY THE WORK SHALL BE GRADED TO A UNIFORM SLOPE AND STABILIZED TO PREVENT EROSION.
25. NO FILL OR EMBANKMENT MATERIAL SHALL BE PLACED ON FROZEN GROUNDING. FROZEN MATERIALS, SNOW OR ICE SHALL NOT BE PLACED IN ANY FILL OR EMBANKMENT.
26. THE SUBGRADE SHALL BE BROUGHT TO A SMOOTH UNIFORM GRADE AND COMPACTED TO 95 PERCENT STANDARD PROCTOR DENSITY UNDER PAVEMENT AND STRUCTURES AND 80 PERCENT STANDARD PROCTOR DENSITY IN OPEN SPACE.
27. ALL TRENCHES IN PUBLIC RIGHT OF WAY SHALL BE BACKFILLED WITH FLOWABLE FILL OR OTHER MATERIAL PRE-APPROVED BY THE LOCAL JURISDICTION.
28. ALL NECESSARY RUBBISH, STUMPS, DEBRIS, STICKS, STONES, AND OTHER REFUSE SHALL BE REMOVED FROM THE SITE AND DISPOSED OF IN A LAWFUL MANNER.
29. ALL BROCHURES, OPERATING AND MAINTENANCE MANUALS, CATALOGS, SHOP DRAWINGS, AND OTHER DOCUMENTS SHALL BE TURNED OVER TO THE GENERAL CONTRACTOR AT COMPLETION OF CONSTRUCTION AND PRIOR TO PAYMENT.
30. CONTRACTOR SHALL SUBMIT A COMPLETE SET OF AS-BUILT REDLINES TO THE GENERAL CONTRACTOR UPON COMPLETION OF PROJECT AND PRIOR TO FINAL PAYMENT.
31. NO OUTDOOR STORAGE OR SOLID WASTE CONTAINERS ARE PROPOSED.
32. ALL MATERIAL SHALL BE FURNISHED AND WORK SHALL BE PERFORMED IN ACCORDANCE WITH THE LATEST GROUNDING STANDARD.
33. CONTRACTOR SHALL REMOVE ALL TRASH AND DEBRIS FROM THE SITE ON A DAILY BASIS.
34. INFORMATION SHOWN ON THESE DRAWINGS WAS OBTAINED FROM SITE VISITS AND/OR DRAWINGS PROVIDED BY THE SITE OWNER.
35. CONTRACTORS SHALL NOTIFY THE ENGINEER OF ANY DISCREPANCIES PRIOR TO ORDERING MATERIAL OR PROCEEDING WITH CONSTRUCTION.
36. ALL CABLE INSTALLATIONS TO FOLLOW MANUFACTURER'S INSTRUCTIONS AND RECOMMENDATIONS.

ANTENNA MOUNTING

1. DESIGN AND CONSTRUCTION OF ANTENNA SUPPORTS SHALL CONFORM TO CURRENT ANSI/TIA-222 OR APPLICABLE LOCAL CODES.
2. ALL STEEL MATERIALS SHALL BE GALVANIZED AFTER FABRICATION IN ACCORDANCE WITH ASTM A123 "ZINC (HOT-DIP GALVANIZED) COATINGS ON IRON AND STEEL PRODUCTS", UNLESS NOTED OTHERWISE.
3. ALL BOLTS, ANCHORS AND MISCELLANEOUS HARDWARE SHALL BE GALVANIZED IN ACCORDANCE WITH ASTM A153 "ZINC-COATING (HOT-DIP) ON IRON AND STEEL HARDWARE", UNLESS NOTED OTHERWISE.
4. DAMAGED GALVANIZED SURFACES SHALL BE REPAIRED BY COLD GALVANIZING IN ACCORDANCE WITH ASTM A780.
5. ALL ANTENNA MOUNTS SHALL BE INSTALLED WITH LOCK NUTS, DOUBLE NUTS AND SHALL BE TORQUED TO MANUFACTURER'S RECOMMENDATIONS.
6. CONTRACTOR SHALL INSTALL ANTENNA PER MANUFACTURER'S RECOMMENDATION FOR INSTALLATION AND GROUNDING.
7. PRIOR TO SETTING ANTENNA AZIMUTHS AND DOWNTILTS, ANTENNA CONTRACTOR SHALL CHECK THE ANTENNA MOUNT FOR TIGHTNESS AND ENSURE THAT THEY ARE PLUMB. ANTENNA AZIMUTHS SHALL BE SET FROM TRUE NORTH AND BE ORIENTED WITHIN +/- 5% AS DEFINED BY THE RFDS. ANTENNA DOWNTILTS SHALL BE WITHIN +/- 0.5% AS DEFINED BY THE RFDS. REFER TO ND-00246.
8. MAINTAIN A MINIMUM OF 3 FEET SEPARATION BETWEEN ALL ANTENNAS. IF 3 FEET IS NOT OBTAINABLE BETWEEN ANY OF THE ANTENNAS, NOTIFY VELEX CM FOR FURTHER DIRECTION.

TORQUE REQUIREMENTS

1. ALL RF CONNECTIONS SHALL BE TIGHTENED WITH A TORQUE WRENCH AND A TORQUE MARK INDICATED ON BOTH SIDES OF THE CONNECTION.
2. ALL GROUNDING AND ANTENNA HARDWARE SHALL ALL BE TIGHTENED WITH A TORQUE WRENCH AND A TORQUE MARK INDICATED ON THE NUT SIDE STARTING FROM THE THREADS TO THE SOLID SURFACE. TORQUE TO THE FOLLOWING VALUES:
   - 2.1. ALL 5/16" ANTENNA HARDWARE TIGHTENED TO 9 FT-LBS.
   - 2.2. ALL 1/2" ANTENNA HARDWARE TIGHTENED TO 43 FT-LBS.
   - 2.3. ALL DIN-TYPE CONNECTIONS TIGHTENED TO 18-22 FT-LBS.
   - 2.4. ALL N-TYPE CONNECTIONS TIGHTENED TO 15-20 IN-LBS.

COAXIAL CABLE NOTES

1. TYPES AND SIZES OF THE ANTENNA CABLE ARE BASED ON ESTIMATED LENGTHS. PRIOR TO ORDERING CABLE, CONTRACTOR SHALL VERIFY ACTUAL LENGTH BASED ON CONSTRUCTION LAYOUT AND NOTIFY THE PROJECT MANAGER IF ACTUAL LENGTHS EXCEED ESTIMATED LENGTHS.
2. CONTRACTOR SHALL VERIFY THE DOWNTILTS OF EACH ANTENNA WITH A DIGITAL LEVEL.
3. CONTRACTOR SHALL CONFIRM COAX COLOR CODING PRIOR TO CONSTRUCTION. REFER TO "ANTENNA SYSTEM LABELING STANDARD" ND-00027 LATEST VERSION.
4. USE 1/2" COAX ON ANTENNAS UNLESS OTHERWISE SPECIFIED.
5. FILL VOID AROUND CABLES AT CONDUIT OPENING WITH FOAM SEALANT TO PREVENT WATER INTRUSION.
6. ALL COAXIAL CABLE SHALL BE SECURED TO THE DESIGNED SUPPORT STRUCTURE, IN AN APPROVED MANNER, AT DISTANCES NOT TO EXCEED 4'-0".
7. CONTRACTOR SHALL FOLLOW ALL MANUFACTURER'S RECOMMENDATIONS REGARDING BOTH THE INSTALLATION AND GROUNDING OF ALL COAXIAL CABLES, CONNECTORS, ANTENNAS, AND ALL OTHER EQUIPMENT.
8. ALL OUTDOOR RF CONNECTIONS SHALL BE WEATHERPROOFED USING COLD SHRINK OR HEAT SHRINK ON ALL ANTENNA AND RADIO CONNECTIONS,

GENERAL CABLE AND EQUIPMENT NOTES

1. PRIOR TO INSTALLATION CONTRACTOR SHALL VERIFY MAKE AND MODEL OF ANTENNA, DIPLEXERS, AND COAX CONFIGURATION.
2. ALL CONNECTIONS FOR HANGERS, SUPPORTS, BRACING, ETC. SHALL BE INSTALLED PER MANUFACTURER'S RECOMMENDATIONS.
3. CONTRACTOR SHALL REFERENCE THE STRUCTURAL ANALYSIS/DESIGN DRAWINGS FOR DIRECTIONS ON CABLE DISTRIBUTION/ROUTING.
4. IF REQUIRED TO PAINT ANTENNAS AND/OR COAX:
   - 4.1. TEMPERATURE SHALL BE ABOVE 50° F.
   - 4.2. PAINT COLOR MUST BE APPROVED BY BUILDING OWNER/LANDLORD.
   - 4.3. FOR REGULATED TOWERS, FAA/FCC APPROVED PAINT IS REQUIRED.
   - 4.4. DO NOT PAINT OVER COLOR CODING OR ON EQUIPMENT MODEL NUMBERS.
5. ALL PROPOSED GROUND BAR DOWNLEADS ARE TO BE TERMINATED TO THE EXISTING ADJACENT GROUND BAR DOWNLEADS A MINIMUM DISTANCE OF 4'-0" BELOW GROUND BAR. TERMINATIONS MAY BE EXOTHERMIC OR COMPRESSION.
6. NO BOLT THREADS TO PROTRUDE MORE THAN 1-1/2".

PREPARED BY:
nexius
NEXIUS SOLUTIONS, INC.
2595 NORTH DALLAS PARKWAY
SUITE 300
FRISCO, TX 75034

CLIENT:
AT&T Mobility
1700 CANTRELL ROAD,
LITTLE ROCK, AR 72223

LICENSED PROFESSIONAL ENGINEER
JACK T. PHIPPS
11626
OKLAHOMA

PE RENEWAL 10/31/22 — NEXIUS SOLUTIONS, INC. — DATE SIGN 06/24/2
OKLAHOMA FIRM NUMBER 7540
RENEWAL DATE 06/30/23

NEXIUS SOLUTIONS, INC. IS REGISTERED IN OK

FOR CONSTRUCTION

SUBMITTALS

REV	DATE	DESCRIPTION	BY
A	01/18/22	CD FOR REVIEW	WF
0	06/24/22	FINAL CD	WF

SITE INFORMATION:

SITE NAME:
CASADY SQUARE

SITE NUMBER:
OKL01652

SITE ADDRESS:
1849 EAST WESTMINSTER PLACE
OKLAHOMA CITY, OK 73120

SITE COORDINATES:
35.558642° / -97.558022°

SHEET TITLE:
GENERAL NOTES

SHEET NUMBER:
GN-1

Attachment: 1 PC-2022-04 Packet (5951 : AT&T - Special Permit Application)

THIS DOCUMENT IS THE DESIGN PROPERTY AND COPYRIGHT OF NEXIUS AND FOR THE EXCLUSIVE USE BY THE TITLE CLIENT. DUPLICATION OR USE WITHOUT THE EXPRESS WRITTEN CONSENT OF THE CREATOR IS STRICTLY PROHIBITED. DRAWING SCALES ARE INTENDED FOR 22"x34" SIZE PRINTED MEDIA ONLY. 11"x17" IS DEEMED HALF SCALE, AND ALL OTHER PRINTED SIZES ARE DEEMED "NOT TO SCALE".

June 23, 2022

Hazel Mauro
Nexius Solutions, INC
1025 South Beltline Rd.,
Coppell, TX 75019
(913) 710-3999

B+T Group
1717 S. Boulder, Suite 300
Tulsa, OK 74119
(918) 587-4630
towersupport@btgrp.com

Subject:	**Water Tower Structural Letter**	
Carrier Designation:	**Site Number:**	OKL01652
	Site Name:	Casady Square
Engineering Firm Designation:	**B+T Group Project Number:**	160864.003.01
Site Data:	**1849 East Westminster Place, Oklahoma City, OK, 73120, Oklahoma County** **Latitude *35.55864°*, Longitude *-97.55802°*** **Water Tank** **(3) 12.5 ft. Sector Mount**	

Dear Hazel Mauro,

B+T Group is pleased to submit this **"Structural Letter"** to determine the structural integrity of the above-mentioned water tower supported telecommunications site.

The purpose of the assessment is to determine acceptability of the water tower to sufficiently support the telecommunications equipment presented in this report. Based on our professional opinion we have determined the suitability for the structure, under the following load case, to be:

Existing + Proposed Equipment **Sufficient Capacity**
Note: See Table 1 for the proposed and existing loading.

The assessment has been performed in accordance with the ASCE 7 standard and the 2015 International Building Code.

All equipment proposed in this report shall be installed in accordance with the drawings for the determined available structural capacity to be effective.

We at *B+T Group* appreciate the opportunity of providing our continuing professional services to you and *Nexius Solutions, INC.* If you have any questions or need further assistance on this or any other projects, please give us a call.

Structural Letter prepared by: Joseph Variamparampil

Respectfully submitted by: B&T Engineering, Inc.
COA: CA 3590 (PE) Expires: 06/30/2022

LICENSED PROFESSIONAL ENGINEER
BRAD ROBERT MILANOWSKI
17379
OKLAHOMA
6/23/22

Brad R. Milanowski, P.E.

Attachment: 1 PC-2022-04 Packet (5951 : AT&T - Special Permit Application)

TABLE OF CONTENTS

1) INTRODUCTION

2) ASSESSMENT CRITERIA
- Table 1 - Proposed Antenna Information
- Table 2 - Documents Provided

3) ASSESSMENT PROCEDURE
- 3.1) Assessment Method
- 3.2) Assumptions

4) ASSESSMENT RESULTS
- 4.1) Recommendations

Attachment: 1 PC-2022-04 Packet (5951 : AT&T - Special Permit Application)

1) INTRODUCTION

The proposed telecommunications equipment will be located on sector mounts at 70 ft., attached to water tank at 1849 East Westminster Place, Oklahoma City, OK, 73120, Oklahoma County. There are existing telecommunications antennas mounted on the water tower. The proposed antenna loading information was obtained from Nexius Solutions, INC. All information provided to B+T Group was assumed accurate and complete.

2) ASSESSMENT CRITERIA

The structural assessment was performed for this structure in accordance with the 2015 International Building Code and the ASCE 7 Design Standard. The TIA-222-H apply to telecommunications towers. Although telecommunications equipment is present, this structure is primarily a water tower and is more appropriately assessed with the ASCE 7 Standard.

Table 1 – Proposed and Existing Equipment Information

Loading	RAD Center Elev. (ft.)	Position	Qty.	Manufacturer	Model / Type	Note
Proposed	70	3	3	Ericsson	AIR6449 N77	1
			3	Ericsson	AIR6419 N77G	
		4	3	CCI	TPA65R-BU8D	
			3	Ericsson	4449 B5/B12	2
		-	3	Raycap	DC9-48-60-24-PC16-EV	3
Existing	70	1	6	Kathrein	80010799	4
			3	Ericsson	RRUS-32 B2	
			6	Ericsson	RRUS-32 B66A	
		-	3	Ericsson	4478 B14	
		4	3	Ericsson	RRUS-32 B30	

Note:
(1) Proposed Antenna to be installed on the Mount Pipe.
(2) Proposed Equipment to be installed side by side with RRUS Support, directly behind the Antenna.
(3) Proposed Equipment to be installed on Mount
(4) Existing Equipment installed on the Mount.

Table 2 – Documents Provided

Documents	Remarks	Reference	Source
RFDS	Existing Loading Proposed Loading	Date: 12/27/2021	Nexius
Mount Analysis Report	B+T Group	Date: 05/04/2022	Nexius

3) ASSESSMENT PROCEDURE

3.1) Assessment Method

This water tower is a substantial structure designed and fabricated to support thousands of gallons of water in addition to its own self weight. The nature and intended purpose of the structure is substantially greater than the addition of the telecommunication equipment. The proposed equipment will be installed on sector mounts at 70 ft. The mount analysis was not performed as part of the report. Seismically the additional weight of the antennas is approximately 445 lbs. The increase is negligible when compared with the overall structural demand required of the Tower. The proposed antennas will be installed on the sector mounts with pipe mounts.

Attachment: 1 PC-2022-04 Packet (5951 : AT&T - Special Permit Application)

3.2) Assumptions

1) The structure was built in accordance with the designer's specifications.
2) The structure has been maintained and is free of damage.
3) The configuration of antennas, mounts and other appurtenances are as specified in Table 1 and the referenced drawings.
4) All mount components have been assumed to be in sufficient condition to carry their full design capacity for the assessment.
5) All prior structural modifications if any are assumed to be correctly installed and fully effective.

This analysis may be affected if any assumptions are not valid or have been made in error. B+T Group should be notified to determine the effect on the structural integrity of the antenna mounting system.

4) ASSESSMENT RESULTS

4.1) Recommendations

1) The proposed equipment shall be installed on the mounts in accordance with the installation drawings.

Attachment: 1 PC-2022-04 Packet (5951 : AT&T - Special Permit Application)

OKL01652 / NICHOLS HILLS / 5G NR 1SR Cband
Scope of Work

Narrative of the SOW

Alpha, Beta, Gamma:
Remove 1x SBNHH-1D65C antenna from POS4.
Remove 1x existing RRUS-11 B12 from POS4. Remove 1x existing RRUS-12 B5 from POS2.
Add 1x new TPA65R-BU8DA-K on POS4.
Add 1x new RRUS-4449 B5/B12 (LTE 700, LTE 850) on POS4 mounted on a new dual bracket. Connect ports to antenna on POS4.
Remount 1x existing RRUS-32 B30 back to back with RRUS-4449. Connect ports to antenna on POS4.
Add 1x new AIR6449 N77D and 1x new AIR6419 N77G on POS3 mounted above each other stacked.
Remove UMTS technology. We can remove 6x coax main lines if ATT agrees.
Remove all FC12s, DC2s, squids, trunks.
Add 1x new DC9-48-60-24-PC16-EV, add 3x new 6AWG6 DC Trunks @ 150' each, and add 1x new 24 pair fiber trunks @ 50 (per sector)

Attachment: 1 PC-2022-04 Packet (5951 : AT&T - Special Permit Application)

Equipment	Height	Width	Depth	Weight	Status	Quantity
Kathrein 80010799	106"	14.8"	6.7"	108lbs	Current, to remain	6
Commscope SBNHH-1D65C	96"	11.9"	7.1"	49.6lbs	Current, to be removed	3
4478 B14	15"	13.2"	7.3"	59.4lbs	Current, to remain	3
RRUS-32 B2	27.2"	12.1"	7.0"	53lbs	Current, to remain	3
RRUS-12 B5	20.39"	18.5"	7.36"	49.38lbs	Current, to be removed	3
RRUS-32 B66A	27.2"	12.1"	7.0"	53lbs	Current, to remain	6
RRUS-11 B12	19.68"	16.96"	7.1"	55lbs	Current, to be removed	3
RRUS-32 B30	27.2"	12.1"	7.0"	53lbs	Current, to remain	3
Ericsson AIR6449 B77D + AIR6419 B77G	72"	15.9"	8.1"	147.7lbs	Proposed	3
4449 B5/B12	17.9"	13.19"	9.44"	71lbs	Proposed	3
CCI TPA65R-BU8D	96"	21"	7.8"	82.5lbs	Proposed	3

Attachment: 1 PC-2022-04 Packet (5951 : AT&T - Special Permit Application)

Larry Stein
Oklahoma County Assessor's Office

Ownership Radius Report

This Official Report is for Account Number R169842995 and is a 300-foot radius from the outside of the polygon. If the minimum number of different owners was not reached it was extended by 100-foot increments until the required number of different owners was reached, or the maximum distance was reached. This report does not constitute a legal survey or document, for definitive description of real property and ownership; consult the deeds recorded in the Oklahoma County Clerks Office. Official Record of this Certified Radius Report will expire 30 days from the date of creation stamped on the back of this sheet.

Attachment: 1 PC-2022-04 Packet (5951 : AT&T - Special Permit Application)

Attachment: 1 PC-2022-04 Packet (5951 : AT&T - Special Permit Application)

STATE OF OKLAHOMA
COUNTY OF OKLA } ss:

I, the duly elected, qualified and acting County Assessor, in and for the Count and State aforesaid, do hereby certify tha the within and foregoing is a full, true an complete copy of 200ft Radius Re filed in the office of the County Assesso on the 18 day of July, 202 Given under my hand and official seal thi 18 day of July, 2022

County Assessor

Deputy

Oklahoma County Assessor's
300ft Radius Report
7/18/2022

accountno	name1	name2	mailingaddress1	Shape	city	state	zipcode	subname	block	lot	legal	location
R169842680	GILBERT J DANIEL & ALYSON TRS	GILBERT J DANIEL & ALYSON L 2021 TRUST	1827 DRAKESTONE AVE		NICHOLS HILLS	OK	73120	NICHOLS HILLS WILSHIRE	107	000	NICHOLS HILLS WILSHIRE 107 000 LOTS 34 35 & 36	1827 DRAKESTONE AVE NICHOLS HILLS
R169842665	HENRY JOHN A IV CO TRS & ETAL	HAGGARD NINA 2011 JAH III GST EX TRUST	1829 DRAKESTONE AVE		NICHOLS HILLS	OK	73120-4715	NICHOLS HILLS WILSHIRE	107	000	NICHOLS HILLS WILSHIRE 107 000 LOTS 31 THRU 33	1829 DRAKESTONE AVE NICHOLS HILLS
R169842650	ANDERSON MIKE & LIESS		1424 GLENBROOK DR		OKLAHOMA CITY	OK	73118	NICHOLS HILLS WILSHIRE	107	000	NICHOLS HILLS WILSHIRE 107 000 LOTS 28 THRU 30	1831 DRAKESTONE AVE NICHOLS HILLS
R169842640	DUNAGIN FAMILY REV TRUST		1833 DRAKESTONE AVE		NICHOLS HILLS	OK	73120-4715	NICHOLS HILLS WILSHIRE	107	000	NICHOLS HILLS WILSHIRE 107 000 LOTS 25 26 & 27	1833 DRAKESTONE AVE NICHOLS HILLS
R087342367	IKARD SAMUEL JAMES		2601 DRAKESTONE AVE		OKLAHOMA CITY	OK	73120	NICHOLS HILLS SUBURBAN TR	105	013	NICHOLS HILLS SUBURBAN TR 105 013 S130FT	2601 DRAKESTONE AVE OKLAHOMA CITY
R169842635	PARHAM CARPENTER		1835 DRAKESTONE AVE		NICHOLS HILLS	OK	73120-4715	NICHOLS HILLS WILSHIRE	107	024	NICHOLS HILLS WILSHIRE 107 024	1835 DRAKESTONE AVE NICHOLS HILLS
R087342369	BOWMAN EDWARD L & BRITTANY D		8609 GREYSTONE AVE		NICHOLS HILLS	OK	73120-4518	NICHOLS HILLS SUBURBAN TR	105	013	NICHOLS HILLS SUBURBAN TR 105 013 N85FT OF S215FT	8609 GREYSTONE AVE OKLAHOMA CITY
R169842595	TULL JIM S & DANETTA B		1830 WESTMINSTER PL		NICHOLS HILLS	OK	73120-4702	NICHOLS HILLS WILSHIRE	107	016	NICHOLS HILLS WILSHIRE 107 016	1830 WESTMINSTER PL NICHOLS HILLS
R169842600	STEWART ROGER P & SUSAN		1832 WESTMINSTER PL		OKLAHOMA CITY	OK	73120-4702	NICHOLS HILLS WILSHIRE	107	017	NICHOLS HILLS WILSHIRE 107 017	1832 WESTMINSTER PL NICHOLS HILLS
R169842605	CRAZY ARMS INVESTMENTS LLC		PO BOX 13060		OKLAHOMA CITY	OK	73113	NICHOLS HILLS WILSHIRE	107	018	NICHOLS HILLS WILSHIRE 107 018	1834 WESTMINSTER PL NICHOLS HILLS
R169842610	NIKKEL SHERYL L TRS	CARPENTER BARBARA O	1836 WESTMINSTER PL		NICHOLS HILLS	OK	73120	NICHOLS HILLS WILSHIRE	107	019	NICHOLS HILLS WILSHIRE 107 019	1836 WESTMINSTER PL NICHOLS HILLS
R169842615	BENEDICT K HENRY & K ARLENE		1838 WESTMINSTER PL		OKLAHOMA CITY	OK	73120-4702	NICHOLS HILLS WILSHIRE	107	020	NICHOLS HILLS WILSHIRE 107 020	1838 WESTMINSTER PL NICHOLS HILLS
R169842620	GILLEY ERIN		1840 WESTMINSTER PL		OKLAHOMA CITY	OK	73120	NICHOLS HILLS WILSHIRE	107	021	NICHOLS HILLS WILSHIRE 107 021	1840 WESTMINSTER PL NICHOLS HILLS
R169842625	TURNER JENNIFER R		2621 GUILFORD LN		NICHOLS HILLS	OK	73120-4536	NICHOLS HILLS WILSHIRE	107	022	NICHOLS HILLS WILSHIRE 107 022	1842 WESTMINSTER PL NICHOLS HILLS
R169842630	GRAHAM JO LYNN		1844 WESTMINSTER PL		OKLAHOMA CITY	OK	73120-4702	NICHOLS HILLS WILSHIRE	107	023	NICHOLS HILLS WILSHIRE 107 023	1844 WESTMINSTER PL NICHOLS HILLS
R087342360	FOSTER JOSEPH H		2609 DRAKESTONE AVE		OKLAHOMA CITY	OK	73120-4525	NICHOLS HILLS SUBURBAN TR	105	011	NICHOLS HILLS SUBURBAN TR 105 011	2609 DRAKESTONE AVE OKLAHOMA CITY

Oklahoma County Assessor's
300ft Radius Report
7/18/2022

R087342362	ZEDLINER GLOBAL LLC		2520 NW GRAND BLVD		OKLAHOMA CITY	OK	73116	NICHOLS HILLS SUBURBAN TR	105	012	NICHOLS HILLS SUBURBAN TR 105 012	2603 DRAKESTONE AVE OKLAHOMA CITY
R087342370	PITTS JOSEPH & BRENDA		8617 GREYSTONE AVE		OKLAHOMA CITY	OK	73120	NICHOLS HILLS SUBURBAN TR	105	000	NICHOLS HILLS SUBURBAN TR 105 000 PT LOT 13 BEG 215FT N OF SE/C LT 13 TH W TO A POINT ON W LINE SD LT 215FT N OF SW/C TH N TO NW/C SD LT TH E TO NE/C SD LT TH S ALONG E LINE SD LT TO BEG	8617 GREYSTONE AVE OKLAHOMA CITY
R179520005	RML PROPERTIES LLC		1236 NW 49TH ST		OKLAHOMA CITY	OK	73118-5208	VILLAGE REPLAT ADD	134	001	VILLAGE REPLAT ADD 134 001	2100 WESTCHESTER DR VILLAGE
R179520010	FRASER HOMES LLC		4316 WINDSONG WAY		OKLAHOMA CITY	OK	73120-8140	VILLAGE REPLAT ADD	134	002	VILLAGE REPLAT ADD 134 002	2104 WESTCHESTER DR VILLAGE
R179520015	CANTU ARIANNE M		6208 NW 160TH TER		EDMOND	OK	73013-3344	VILLAGE REPLAT ADD	134	003	VILLAGE REPLAT ADD 134 003	2108 WESTCHESTER DR VILLAGE
R179520020	JOHN GALT HOMES LLC		426 NW 5TH ST STE 200		OKLAHOMA CITY	OK	73102-3059	VILLAGE REPLAT ADD	134	004	VILLAGE REPLAT ADD 134 004	2112 WESTCHESTER DR VILLAGE
R179520025	ALCHEMY INVESTMENTS LLC		2116 WESTCHESTER DR		THE VILLAGE	OK	73120	VILLAGE REPLAT ADD	134	005	VILLAGE REPLAT ADD 134 005	2116 WESTCHESTER DR VILLAGE
R169842995	CITY OF NICHOLS HILLS		6407 AVONDALE DR		NICHOLS HILLS	OK	73116-6431	NICHOLS HILLS WILSHIRE	108	000	NICHOLS HILLS WILSHIRE 108 000 LOTS 24 & 25 EXEMPT	0 UNKNOWN NICHOLS HILLS
R169842990	LEWIS CHARLES ALEXANDER		1845 WESTMINSTER PL		NICHOLS HILLS	OK	73120	NICHOLS HILLS WILSHIRE	108	023	NICHOLS HILLS WILSHIRE 108 023	1845 WESTMINSTER PL NICHOLS HILLS
R169842985	LAWP INVESTMENTS LLC		PO BOX 20787		OKLAHOMA CITY	OK	73156	NICHOLS HILLS WILSHIRE	108	022	NICHOLS HILLS WILSHIRE 108 022	1843 WESTMINSTER PL NICHOLS HILLS
R169842980	GUTHERY BILLY B JR TRS	GUTHERY BILLY B LIVING TRUST	13233 SAINT ANDREWS DR		OKLAHOMA CITY	OK	73120-8549	NICHOLS HILLS WILSHIRE	108	021	NICHOLS HILLS WILSHIRE 108 021	1841 WESTMINSTER PL NICHOLS HILLS
R169842975	SAHEB EDWARD F LF EST	RAHANJAM HAIDEH	1839 WESTMINSTER PL		NICHOLS HILLS	OK	73120	NICHOLS HILLS WILSHIRE	108	020	NICHOLS HILLS WILSHIRE 108 020	1839 WESTMINSTER PL NICHOLS HILLS
R169842970	THAD MICHAEL DALE REVOCABLE TRUST		1837 WESTMINISTER PL		OKLAHOMA CITY	OK	73120	NICHOLS HILLS WILSHIRE	108	019	NICHOLS HILLS WILSHIRE 108 019	1837 WESTMINSTER PL NICHOLS HILLS
R169842965	D & G 1835 LLC		2636 NW 153RD ST		EDMOND	OK	73013	NICHOLS HILLS WILSHIRE	108	018	NICHOLS HILLS WILSHIRE 108 018	1835 WESTMINSTER PL NICHOLS HILLS
R179583810	BUTTS EMILY M		2004 WESTCHESTER DR		OKLAHOMA CITY	OK	73120-1133	VILLAGE EXTENDED	146	020	VILLAGE EXTENDED 146 020	2004 WESTCHESTER DR VILLAGE
R179583820	PEREZ LUIS & MARIA		14300 OAKMOND RD		EDMOND	OK	73013-2444	VILLAGE EXTENDED	146	021	VILLAGE EXTENDED 146 021	2008 WESTCHESTER DR VILLAGE
R179583830	GREENWAY HOMES LLC SERIES A		PO BOX 21444		OKLAHOMA CITY	OK	73156-1444	VILLAGE EXTENDED	146	022	VILLAGE EXTENDED 146 022	2012 WESTCHESTER DR VILLAGE
R179583840	PATTERSON MICHELLE		119 DELESPINE ST		MELBOURNE BCH	FL	32951-3863	VILLAGE EXTENDED	146	023	VILLAGE EXTENDED 146 023	2016 WESTCHESTER DR VILLAGE

Oklahoma County Assessor's
300ft Radius Report
7/18/2022

R179583850	GILCREASE JEANNINE REV TRUST		2020 WESTCHESTER DR		OKLAHOMA CITY	OK	73120-1133	VILLAGE EXTENDED	146	024	VILLAGE EXTENDED 146 024	2020 WESTCHESTER DR VILLAGE
R179583860	BURTON TIFFANY R & DANIEL R		PO BOX 20778		OKLAHOMA CITY	OK	73156-0778	VILLAGE EXTENDED	146	025	VILLAGE EXTENDED 146 025	2024 WESTCHESTER DR VILLAGE
R179583870	SCHELL FAMILY TRUST		11515 HILLSDALE DR		EDMOND	OK	73013-0465	VILLAGE EXTENDED	146	026	VILLAGE EXTENDED 146 026	2028 WESTCHESTER DR VILLAGE
R179583880	SUPON CARLA J		PO BOX 20864		OKLAHOMA CITY	OK	73156-0864	VILLAGE EXTENDED	146	027	VILLAGE EXTENDED 146 027	2032 WESTCHESTER DR VILLAGE
R179520720	CG PROPERTIES LLC		3001 PELHAM DR		OKLAHOMA CITY	OK	73120	VILLAGE REPLAT ADD	135	046	VILLAGE REPLAT ADD 135 046	2101 WESTCHESTER DR VILLAGE
R179520710	MULLEN JEFFERY	MULLEN LISA	3018 CREEKVIEW DR		TUTTLE	OK	73089	VILLAGE REPLAT ADD	135	045	VILLAGE REPLAT ADD 135 045	2105 WESTCHESTER DR VILLAGE
R179520700	HANNA VANESSA F & TIMOTHY R		2109 WESTCHESTER DR		OKLAHOMA CITY	OK	73120	VILLAGE REPLAT ADD	135	044	VILLAGE REPLAT ADD 135 044	2109 WESTCHESTER DR VILLAGE
R179520690	TING SQUARE INVESTMENTS INC		409 NW 18TH ST		OKLAHOMA CITY	OK	73103-1905	VILLAGE REPLAT ADD	135	043	VILLAGE REPLAT ADD 135 043	2113 WESTCHESTER DR VILLAGE
R179520680	BJ RESIDENTIAL LLC		1269 MISTY DR NW		PIEDMONT	OK	73078	VILLAGE REPLAT ADD	135	042	VILLAGE REPLAT ADD 135 042	2117 WESTCHESTER DR VILLAGE
R179583340	STONEFLY PROPERTIES LLC		PO BOX 18852		OKLAHOMA CITY	OK	73154-0852	VILLAGE EXTENDED	145	026	VILLAGE EXTENDED 145 026	2033 WESTCHESTER DR VILLAGE
R179583350	NICHOLSON JAMES M & SUSAN B TRS	NICHOLSON FAMILY REV LIVING TRUST	1805 GUILFORD LN		NICHOLS HILLS	OK	73120-4730	VILLAGE EXTENDED	145	027	VILLAGE EXTENDED 145 027	2029 WESTCHESTER DR VILLAGE
R179583360	GARRISON PAIGE & NICOLAAS		2025 WESTCHESTER DR		OKLAHOMA CITY	OK	73120	VILLAGE EXTENDED	145	028	VILLAGE EXTENDED 145 028	2025 WESTCHESTER DR VILLAGE
R179583370	HALL EMILY LOU		PO BOX 82098		OKLAHOMA CITY	OK	73148-0098	VILLAGE EXTENDED	145	029	VILLAGE EXTENDED 145 029	2021 WESTCHESTER DR VILLAGE
R179583380	RENZ MARY E		2017 WESTCHESTER DR		OKLAHOMA CITY	OK	73120	VILLAGE EXTENDED	145	030	VILLAGE EXTENDED 145 030	2017 WESTCHESTER DR VILLAGE
R179583390	MINTON AUDRA M		2013 WESTCHESTER DR		OKLAHOMA CITY	OK	73120-1132	VILLAGE EXTENDED	145	031	VILLAGE EXTENDED 145 031	2013 WESTCHESTER DR VILLAGE
R179583400	HART KELLI		11415 RED ROCK RD		OKLAHOMA CITY	OK	73120	VILLAGE EXTENDED	145	032	VILLAGE EXTENDED 145 032	2009 WESTCHESTER DR VILLAGE
R179520270	KARABINUS CHRISTINE ELIZABETH		2100 BRIGHTON AVE		OKLAHOMA CITY	OK	73120-4812	VILLAGE REPLAT ADD	135	001	VILLAGE REPLAT ADD 135 001	2100 BRIGHTON AVE VILLAGE
R179520300	CELKS LLC		1712 DORCHESTER PL		NICHOLS HILLS	OK	73120-1008	VILLAGE REPLAT ADD	135	004	VILLAGE REPLAT ADD 135 004	2112 BRIGHTON AVE VILLAGE
R179520290	OMNI LAND CORP		PO BOX 3848		EDMOND	OK	73083-3848	VILLAGE REPLAT ADD	135	003	VILLAGE REPLAT ADD 135 003	2108 BRIGHTON AVE VILLAGE
R179520280	CANTU ARIANNE M	CANTU ADRIAN J	2104 BRIGHTON AVE		OKLAHOMA CITY	OK	73120-4812	VILLAGE REPLAT ADD	135	002	VILLAGE REPLAT ADD 135 002	2104 BRIGHTON AVE VILLAGE
R179583330	LOWELL AMANDA M		2032 BRIGHTON AVE		VILLAGE	OK	73120	VILLAGE EXTENDED	145	025	VILLAGE EXTENDED 145 025	2032 BRIGHTON AVE VILLAGE
R179583320	MILES TIMOTHY		2028 BRIGHTON AVE		OKLAHOMA CITY	OK	73120-1115	VILLAGE EXTENDED	145	024	VILLAGE EXTENDED 145 024	2028 BRIGHTON AVE VILLAGE
R179583310	ZEECK REALTY MARKETING LLC		PO BOX 18143		OKLAHOMA CITY	OK	73154	VILLAGE EXTENDED	145	023	VILLAGE EXTENDED 145 023	2024 BRIGHTON AVE VILLAGE

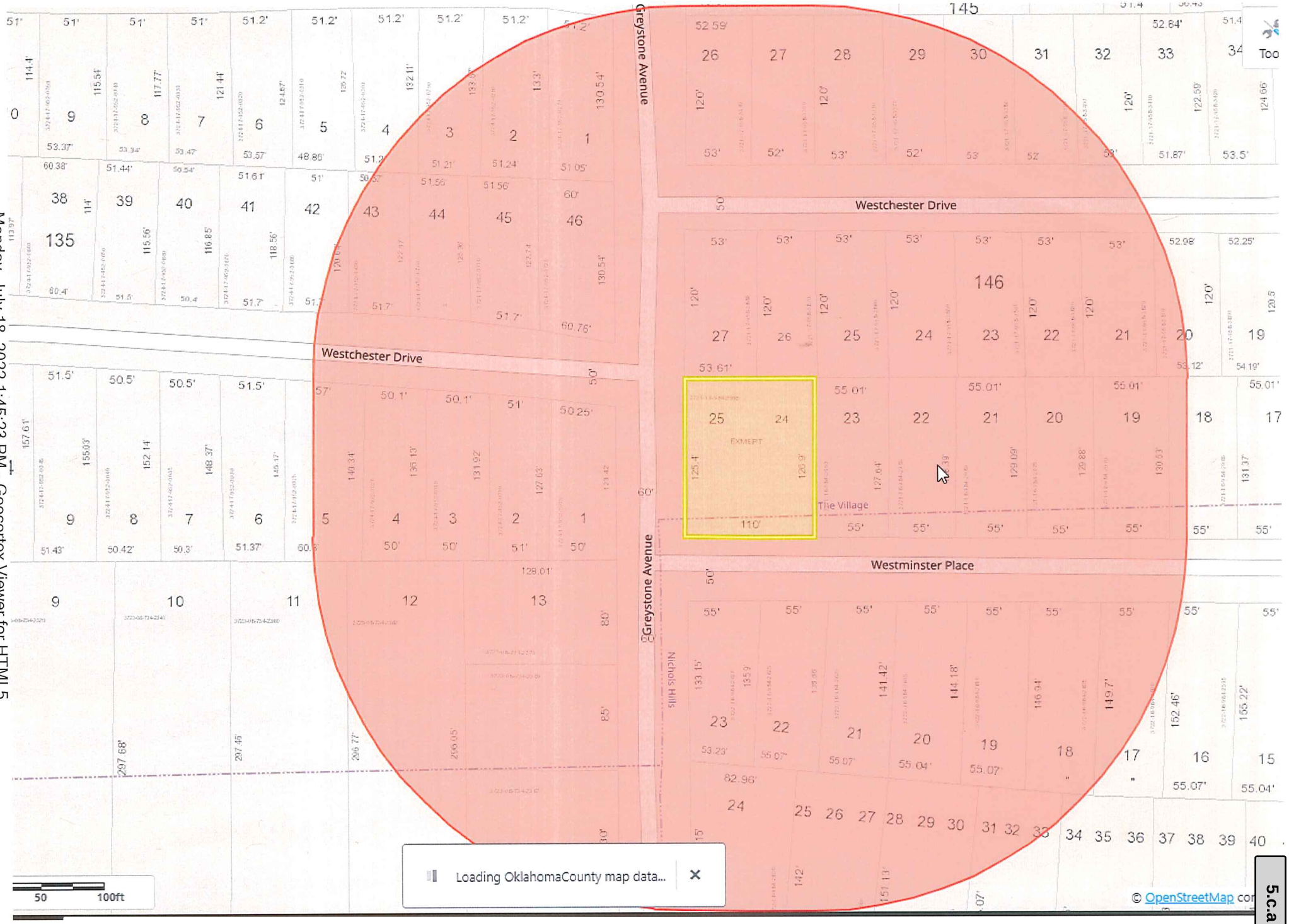

Monday, July 18, 2022 1:45:23 PM - Geocortex Viewer for HTML5

5.c.a

May 4, 2022

Hazel Mauro
Nexius
1025 South Beltline Rd.,
Coppell, TX 75019
(913) 710-3999

B+T Group
1717 S. Boulder, Suite 300
Tulsa, OK 74119
(918) 587- 4630
btwo@btgrp.com

Subject:	**Appurtenance Mount Analysis Report**	
Carrier Designation:	**Site Number:** **Site Name:**	OKL01652 Casady Square
Engineering Firm Designation:	**B+T Group Project Number:**	160864.001.01
Site Data:	**1849 East Westminster Place, Oklahoma City, OK, 73120, Oklahoma County** **Latitude *35.55864°*, Longitude *-97.55802°*** **Water Tank** **(3) 12.5 ft. Sector Mount**	

Dear Mr. Mauro,

B+T Group is pleased to submit this **"Appurtenance Mount Analysis Report"** to determine the structural integrity of the antenna mount on the above-mentioned structure.

The purpose of the analysis is to determine acceptability of the mount's stress level. Based on our analysis we have determined the stress level for the mount under the following load case to be:

Existing + Proposed Equipment Note: See Table 1 for the final loading configuration	**Sufficient Capacity** **(Passing at 71.4%)**

This analysis has been performed in accordance with the ANSI/TIA-222-H Standard.

All the equipment proposed in this report shall be installed in accordance with the drawings for the determined available structural capacity to be effective.

We at *B+T Group* appreciate the opportunity of providing our continuing professional services to you and *Nexius.* If you have any questions or need further assistance on this or any other projects, please give us a call.

Mount structural analysis prepared by: Erik Perez

Respectfully submitted by: B&T Engineering, Inc.
COA: CA 3590 (PE) Expires: 06/30/2022

LICENSED PROFESSIONAL ENGINEER
BRAD ROBERT MILANOWSKI
17379
OKLAHOMA
5/4/22

Brad R. Milanowski, P.E.

Attachment: 1 PC-2022-04 Packet (5951 : AT&T - Special Permit Application)

TABLE OF CONTENTS

1) INTRODUCTION

2) ANALYSIS CRITERIA
Table 1 – Proposed and Existing Equipment Information
Table 2 – Documents Provided

3) ANALYSIS PROCEDURE
3.1) Analysis Method
3.2) Assumptions

4) ANALYSIS RESULTS
Table 3 – Mount Component Stresses vs. Capacity

5) RECOMMENDATIONS

6) APPENDIX A
RISA-3D Output

7) APPENDIX B
Additional Calculations

Attachment: 1 PC-2022-04 Packet (5951 : AT&T - Special Permit Application)

1) INTRODUCTION

The appurtenance mount consists of sector mount designed by Sabre (Part #C10152269) at 70 ft., attached to water tank at 1849 East Westminster Place, Oklahoma City, OK, 73120, Oklahoma County. The proposed antenna loading information was obtained from Nexius. All information provided to B+T Group was assumed accurate and complete.

2) ANALYSIS CRITERIA

The structural analysis was performed for this mount in accordance with the ANSI/TIA-222-H-2017 Structural Standard for Antenna Supporting Structures and Antennas and Small Wind Turbine Support Structures using a 3-second gust wind speed of 109 mph with no ice and 40 mph with 1.5-inch escalated ice thickness. Exposure Category C & Topographic Category 1 and Risk Category II were used in this analysis. In addition, the sector mount has been analyzed for various live loading conditions consisting of a 250-lb man live load applied individually at the midpoint and cantilevered ends of horizontal members as well as a 500-pound man live load applied individually at mount pipe locations using a 3-second gust of 30 mph. The mount was analyzed under 30º increments in the wind direction. The analyzed loading is detailed in Table 1.

Table 1 – Proposed and Existing Equipment Information

Loading	RAD Center Elev. (ft.)	Position	Qty.	Manufacturer	Model / Type	Note
Proposed	70	3	3	Ericsson	AIR6449 N77	1
			3	Ericsson	AIR6419 N77G	
		4	3	CCI	TPA65R-BU8D	
			3	Ericsson	4449 B5/B12	2
		-	3	Raycap	DC9-48-60-24-PC16-EV	3
Existing	70	1	6	Kathrein	80010799	4
			3	Ericsson	RRUS-32 B2	
			6	Ericsson	RRUS-32 B66A	
		-	3	Ericsson	4478 B14	
		4	3	Ericsson	RRUS-32 B30	

Note:
(1) Proposed Antenna to be installed on the Mount Pipe.
(2) Proposed Equipment to be installed side by side with RRUS Support, directly behind the Antenna.
(3) Proposed Equipment to be installed on Mount
(4) Existing Equipment installed on the Mount.

Table 2 – Documents Provided

Documents	Remarks	Reference	Source
RFDS	Existing Loading Proposed Loading	Date: 12/27/2021	Nexius
Previous MA	NB+C Engineering Services	Date: 12/15/2017	Nexius

3) ANALYSIS PROCEDURE

3.1) Analysis Method

RISA-3D (Version 20.0.1), a commercially available analysis software package, was used to create a three-dimensional model of the mount and calculate member stresses and deflections for various loading cases. Selected output from the analysis is included in Appendix A.

Manufacturers drawing were used to create the model.

Attachment: 1 PC-2022-04 Packet (5951 : AT&T - Special Permit Application)

3.2) Assumptions

1. The mount was built in accordance with the manufacturer's specifications.
2. The mount has been maintained in accordance with the manufacturer's specifications and is free of damage.
3. The configuration of antennas and other appurtenances are as specified in Table 1.
4. All mount components have been assumed to be in sufficient condition to carry their full design capacity for the analysis.
5. Mount area and weights are determined from field measurements, standard material properties, and/or manufacturer product data.
   The following assumptions have been included in the analysis of the mount:

Component	Section	Length	Note
Antenna Mount Pipes	2" STD Pipe	8'-0"	In Positions 1,2,3,4,6
	2" STD Pipe	5'-0"	In Positions 5
Unistruts	P1000	-	V-Frames

6. Serviceability with respect to antenna twist, tilt, roll, or lateral translation is not checked and is left to the carrier or tower owner to ensure conformance.
7. All prior structural modifications if any are assumed to be correctly installed and fully effective.
8. All member connections are assumed to have been designed to meet or exceed the load carrying capacity of the connected member unless otherwise specified in this report.
9. The following material grades were assumed (Unless Noted Otherwise):
   a) Connection Bolts : ASTM A325
   b) Steel Pipe : ASTM A53 (GR. 35)
   c) HSS (Round) : ASTM 500 (GR. B-42)
   d) HSS (Rectangular) : ASTM 500 (GR. B-46)
   e) Channel : ASTM A36 (GR. 36)
   f) Steel Solid Rod : ASTM A36 (GR. 36)
   g) Steel Plate : ASTM A36 (GR. 36)
   h) Steel Angle : ASTM A36 (GR. 36)
   i) UNISTRUT : ASTM A570 (GR. 33)

This analysis may be affected if any assumptions are not valid or have been made in error. B+T Group should be notified to determine the effect on the structural integrity of the antenna mounting system.

Attachment: 1 PC-2022-04 Packet (5951 : AT&T - Special Permit Application)

4) ANALYSIS RESULTS

Table 3 – Mount Component Stresses vs. Capacity

Notes	Component	Elevation (ft.)	% Capacity	Pass / Fail
-	Support Angles	70	71.4	Pass
-	Connection Angles	70	32.5	Pass
-	Verticals	70	21.2	Pass
-	Diagonals	70	17.2	Pass
-	Face Horizontals	70	59.3	Pass
	Mount Pipes	70	47.4	Pass
-	Tieback	70	7.9	Pass
-	Vertical Support Pipe	70	40.8	Pass
-	Unistruts	70	24.1	Pass

5) RECOMMENDATIONS

The mount has sufficient capacity to carry the existing and proposed loads and is in compliance with the ANSI/TIA-222-H standard for the proposed, reserved and existing loading. (Refer to the RISA output for the specific members).

Attachment: 1 PC-2022-04 Packet (5951 : AT&T - Special Permit Application)

APPENDIX A

(RISA-3D Output)

Attachment: 1 PC-2022-04 Packet (5951 : AT&T - Special Permit Application)

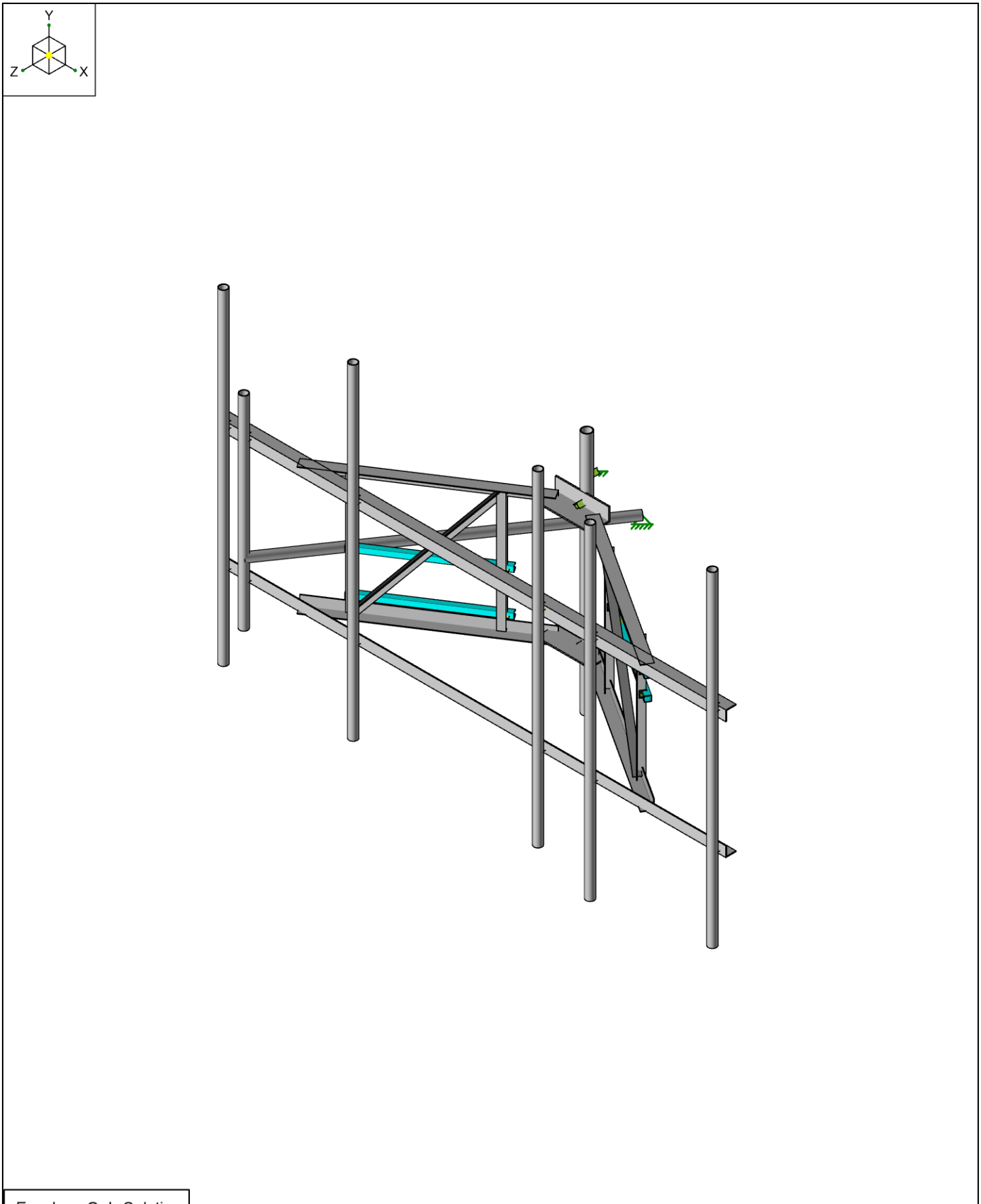

Envelope Only Solution

B+T Group	OKL01652 - CASADY SQUARE	AK1
AK		May 04, 2022
160864.001.01		160864_001_01_CASADY SQUA…

Attachment: 1 PC-2022-04 Packet (5951 : AT&T - Special Permit Application)

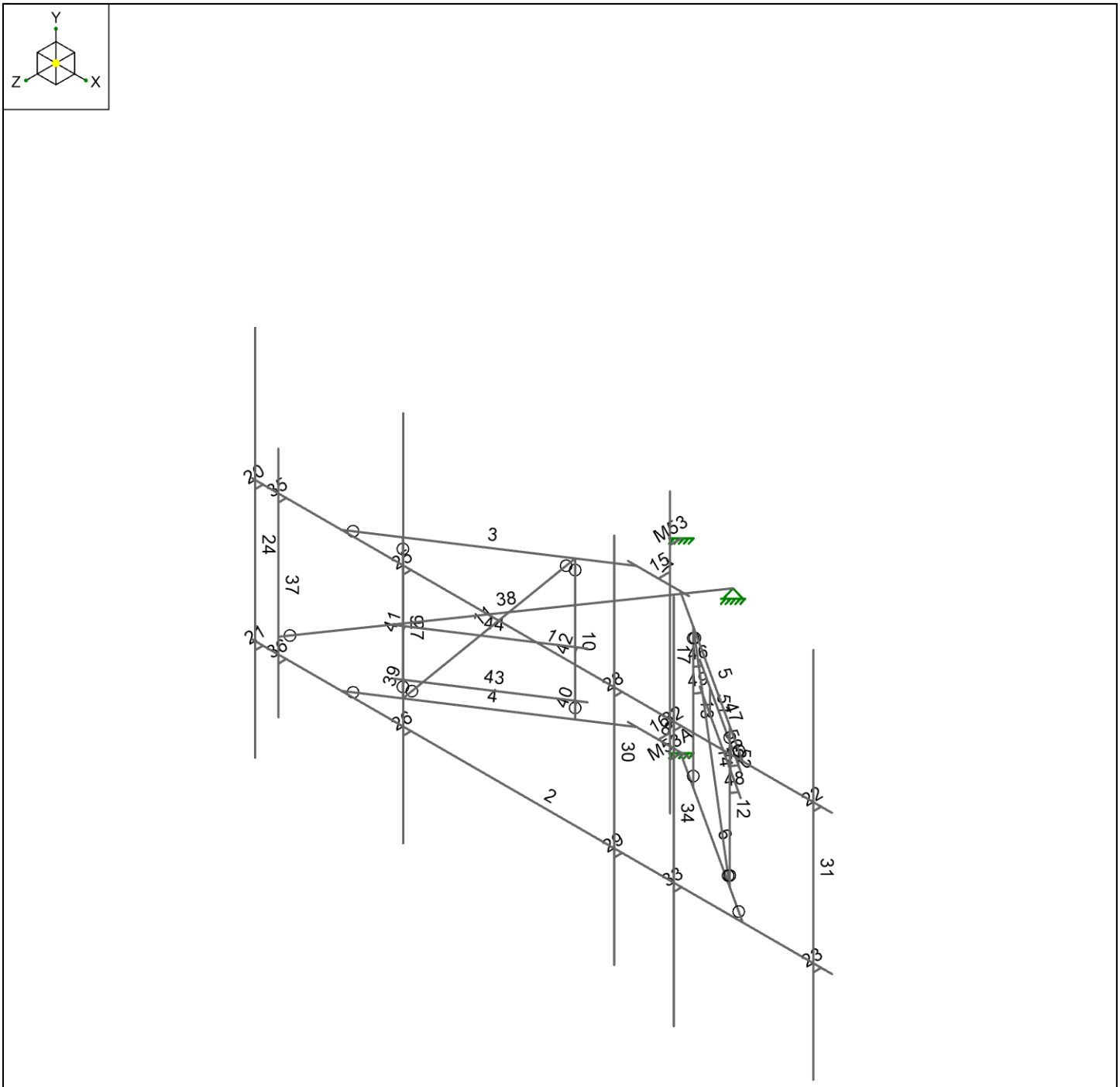

Envelope Only Solution

B+T Group	OKL01652 - CASADY SQUARE	AK2
AK		May 04, 2022
160864.001.01		160864_001_01_CASADY SQUA…

Attachment: 1 PC-2022-04 Packet (5951 : AT&T - Special Permit Application)

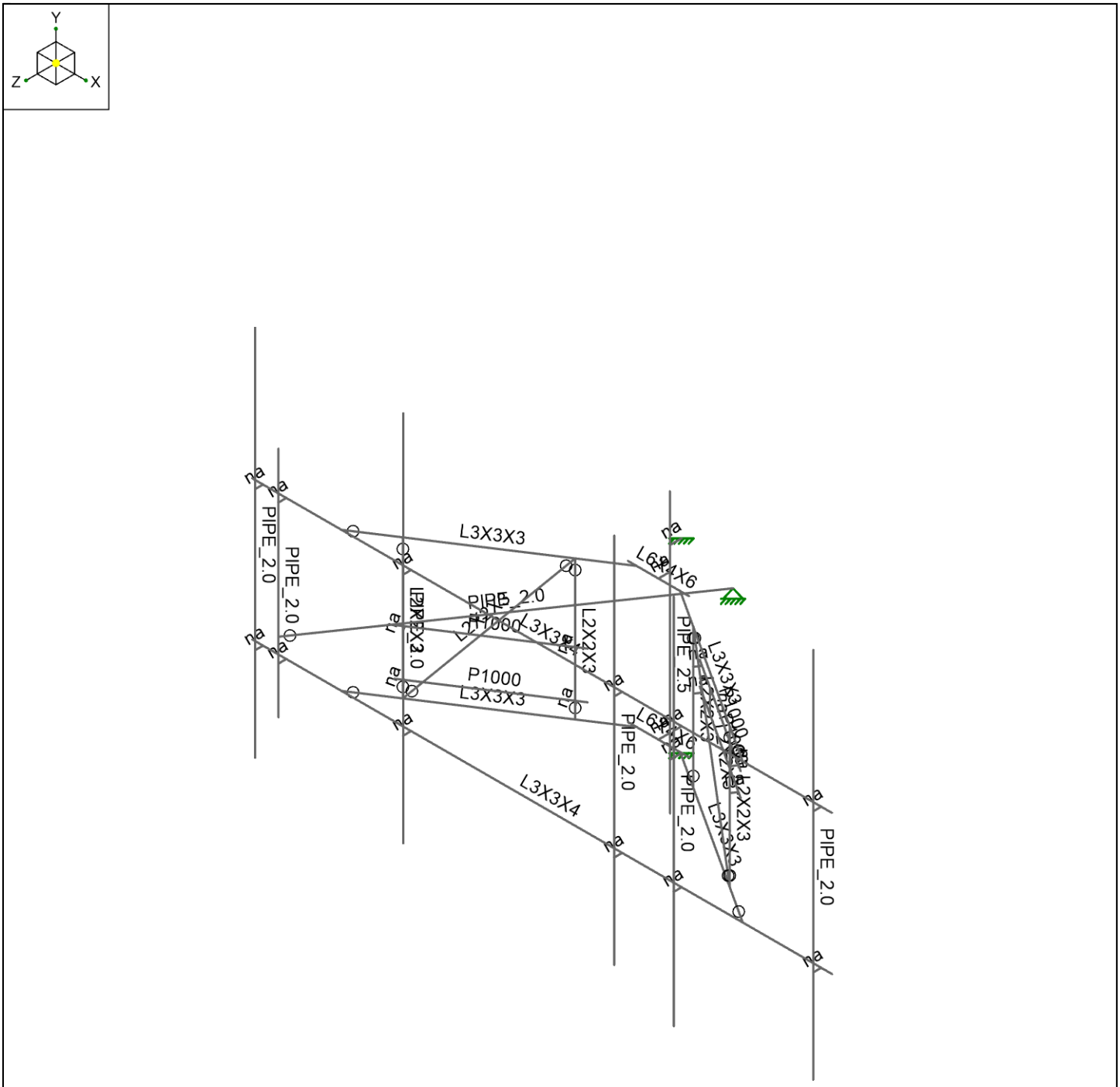

Envelope Only Solution

B+T Group	OKL01652 - CASADY SQUARE	AK3
AK		May 04, 2022
160864.001.01		160864_001_01_CASADY SQUA…

Attachment: 1 PC-2022-04 Packet (5951 : AT&T - Special Permit Application)

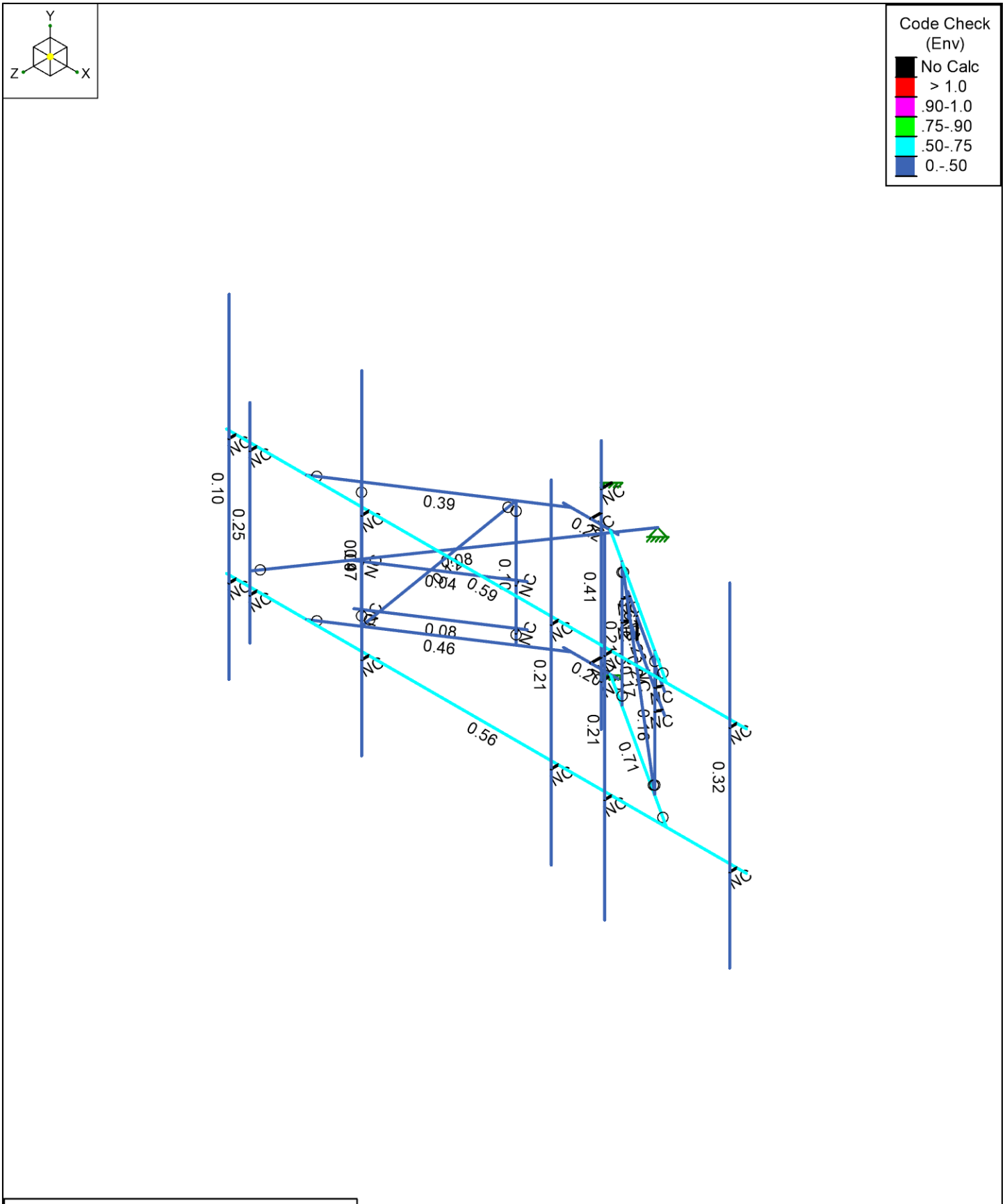

Member Code Checks Displayed (Enveloped)
Envelope Only Solution

B+T Group	OKL01652 - CASADY SQUARE	AK4
AK		May 04, 2022
160864.001.01		160864_001_01_CASADY SQUA…

Attachment: 1 PC-2022-04 Packet (5951 : AT&T - Special Permit Application)

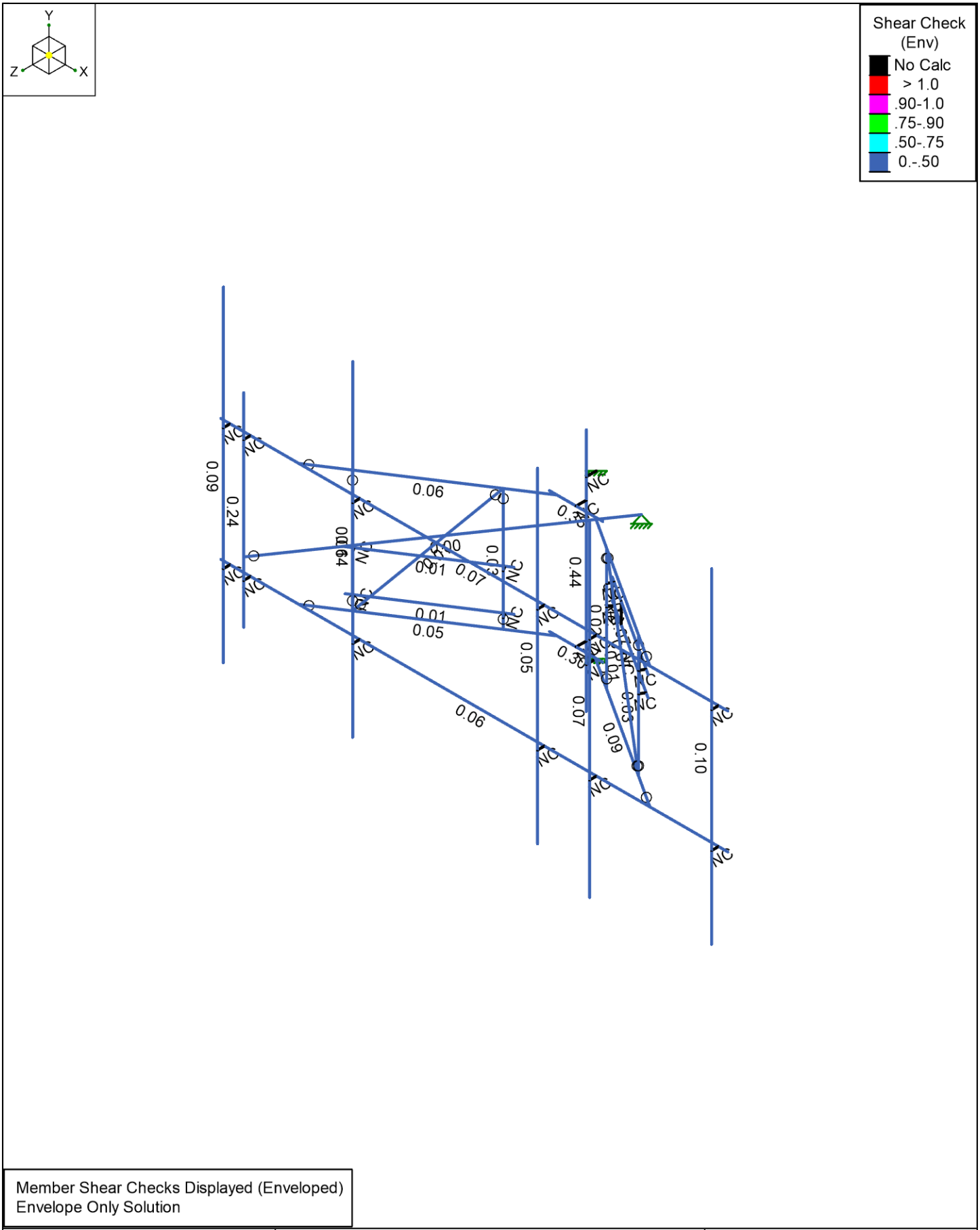

Member Shear Checks Displayed (Enveloped)
Envelope Only Solution

B+T Group	OKL01652 - CASADY SQUARE	AK5
AK		May 04, 2022
160864.001.01		160864_001_01_CASADY SQUA…

Attachment: 1 PC-2022-04 Packet (5951 : AT&T - Special Permit Application)

Node Coordinates

	Label	X [ft]	Y [ft]	Z [ft]	Detach From Diaphragm
1	1	0	-3	2.244792	
2	2	0	0	2.244792	
3	3	4.3125	0	4.744792	
4	4	-4.3125	0	4.744792	
5	5	4.3125	-3	4.744792	
6	6	-4.3125	-3	4.744792	
7	7	-6.229167	-3	4.744792	
8	8	-6.229167	0	4.744792	
9	9	6.229167	-3	4.744792	
10	10	6.229167	0	4.744792	
11	11	-0.65625	-3	2.244792	
12	12	-0.65625	0	2.244792	
13	13	0.65625	-3	2.244792	
14	14	0.65625	0	2.244792	
15	15	-0.46875	-3	2.244792	
16	16	-0.46875	0	2.244792	
17	17	0.46875	-3	2.244792	
18	18	0.46875	0	2.244792	
19	19	-3.513507	0	4.225122	
20	20	-3.513507	-3	4.225122	
21	21	-1.26934	0	2.765501	
22	22	-1.26934	-3	2.765501	
23	23	3.513507	0	4.225122	
24	24	3.513507	-3	4.225122	
25	25	1.26934	0	2.765501	
26	26	1.26934	-3	2.765501	
27	27	0	-3	1.994792	
28	28	0	0	1.994792	
29	29	0	0	0	
30	30	0	1.5	1.994792	
31	31	0	-4.5	1.994792	
32	32	0	-3.25	1.994792	
33	33	0	-3.25	0.75	
34	34	-5.99997	0	4.744792	
35	35	-5.99997	0	4.914158	
36	36	-5.99997	-3	4.744792	
37	37	-5.99997	-3	4.914158	
38	38	5.99997	0	4.744792	
39	39	5.99997	0	4.914158	
40	40	5.99997	-3	4.744792	
41	41	5.99997	-3	4.914158	
42	42	-5.99997	3	4.914158	
43	43	-5.99997	-5	4.914158	
44	44	-2.8167	0	4.744792	
45	45	-2.8167	0	4.914158	
46	46	-2.8167	-3	4.744792	
47	47	-2.8167	-3	4.914158	
48	48	-2.8167	3	4.914158	
49	49	-2.8167	-5	4.914158	
50	50	1.720804	0	4.744792	
51	51	1.720804	0	4.914158	
52	52	1.720804	-3	4.744792	
53	53	1.720804	-3	4.914158	
54	54	1.720804	3	4.914158	
55	55	1.720804	-5	4.914158	

Attachment: 1 PC-2022-04 Packet (5951 : AT&T - Special Permit Application)

Node Coordinates (Continued)

	Label	X [ft]	Y [ft]	Z [ft]	Detach From Diaphragm
56	56	6.00003	3	4.914158	
57	57	6.00003	-5	4.914158	
58	58	3.00003	0	4.744792	
59	59	3.00003	0	4.914158	
60	60	3.00003	-3	4.744792	
61	61	3.00003	-3	4.914158	
62	62	3.00003	2.5	4.914158	
63	63	3.00003	-5.5	4.914158	
64	64	-5.5	0	4.744792	
65	65	-5.5	0	4.914158	
66	66	-5.5	-3	4.744792	
67	67	-5.5	1	4.914158	
68	68	-5.5	-4	4.914158	
69	69	-5.5	-3	4.914158	
70	70	-5.5	-2.5	4.914158	
71	71	-3.587664	-2.749995	4.111111	
72	72	-3.513507	-2.749995	4.225122	
73	73	-1.343495	-2.749995	2.651489	
74	74	-1.26934	-2.749995	2.765501	
75	75	-3.587664	-1.749995	4.111111	
76	76	-3.513507	-1.749995	4.225122	
77	77	-1.343494	-1.749995	2.651489	
78	78	-1.26934	-1.749995	2.765501	
79	79	-3.723011	-2.749995	4.199142	
80	80	-1.208147	-2.749995	2.563458	
81	81	-3.723011	-1.749995	4.199142	
82	82	-1.208147	-1.749995	2.563458	
83	83	3.587663	-0.75	4.111111	
84	84	3.513507	-0.75	4.225122	
85	85	1.343494	-0.75	2.651489	
86	86	1.26934	-0.75	2.765501	
87	87	3.72301	-0.75	4.199142	
88	88	1.208147	-0.75	2.563458	
89	89	3.587663	-1.25	4.111111	
90	90	3.513507	-1.25	4.225122	
91	91	1.343494	-1.25	2.651489	
92	92	1.26934	-1.25	2.765501	
93	93	3.723011	-1.25	4.199142	
94	94	1.208147	-1.25	2.563458	
95	95	1.515545	0	-0.875	
96	96	-1.515545	0	-0.875	
97	97	-1.515545	-2.5	-0.875	
98	98	3.094295	-0.75	3.790221	
99	99	3.094295	-1.25	3.790221	
100	100	1.836863	-0.75	2.972379	
101	101	1.836863	-1.25	2.972379	
102	102	0	0.5	1.994792	
103	103	0	0.5	1.75	
104	104	0	-3.5	1.994792	
105	105	0	-3.5	1.75	

Node Boundary Conditions

	Node Label	X [k/in]	Y [k/in]	Z [k/in]	X Rot [k-ft/rad]	Y Rot [k-ft/rad]	Z Rot [k-ft/rad]
1	2						
2	1						

Attachment: 1 PC-2022-04 Packet (5951 : AT&T - Special Permit Application)

Node Boundary Conditions (Continued)

	Node Label	X [k/in]	Y [k/in]	Z [k/in]	X Rot [k-ft/rad]	Y Rot [k-ft/rad]	Z Rot [k-ft/rad]
3	27						
4	28						
5	97	Reaction	Reaction	Reaction			
6	102						
7	103	Reaction	Reaction	Reaction	Reaction	Reaction	Reaction
8	105	Reaction	Reaction	Reaction	Reaction	Reaction	Reaction

Hot Rolled Steel Properties

	Label	E [ksi]	G [ksi]	Nu	Therm. Coeff. [1e⁵°F⁻¹]	Density [k/ft³]	Yield [ksi]	Ry	Fu [ksi]	Rt
1	A36 Gr.36	29000	11154	0.3	0.65	0.49	36	1.5	58	1.2
2	A572 Gr.50	29000	11154	0.3	0.65	0.49	50	1.1	58	1.2
3	A992	29000	11154	0.3	0.65	0.49	50	1.1	58	1.2
4	A500 Gr.42	29000	11154	0.3	0.65	0.49	42	1.3	58	1.1
5	A500 Gr.46	29000	11154	0.3	0.65	0.49	46	1.2	58	1.1
6	A53 Gr.B	29000	11154	0.3	0.65	0.49	35	1.5	58	1.2
7	A500 Gr.B RND	29000	11154	0.3	0.65	0.527	42	1.4	58	1.3
8	A500 Gr.B Rect	29000	11154	0.3	0.65	0.527	46	1.4	58	1.3
9	A1085	29000	11154	0.3	0.65	0.49	50	1.4	65	1.3

Cold Formed Steel Properties

	Label	E [ksi]	G [ksi]	Nu	Therm. Coeff. [1e⁵°F⁻¹]	Density [k/ft³]	Yield [ksi]	Fu [ksi]
1	A570_33	29500	11346	0.3	0.65	0.49	33	52
2	A607_C1_55	29500	11346	0.3	0.65	0.49	55	70
3	A653 SS Gr33	29500	11346	0.3	0.65	0.49	33	45
4	A653 SS Gr50/1	29500	11346	0.3	0.65	0.49	50	65

Hot Rolled Steel Section Sets

	Label	Shape	Type	Design List	Material	Design Rule	Area [in²]	Iyy [in⁴]	Izz [in⁴]	J [in⁴]
1	F1-H1	L3X3X3	Beam	Single Angle	A572 Gr.50	Typical	1.09	0.948	0.948	0.014
2	F1-H2	L6X4X6	Beam	Single Angle	A36 Gr.36	Typical	3.61	4.86	13.4	0.177
3	F1-V1	L2X2X3	Column	Single Angle	A572 Gr.50	Typical	0.722	0.271	0.271	0.009
4	F1-D1	L2X2X3	VBrace	Single Angle	A572 Gr.50	Typical	0.722	0.271	0.271	0.009
5	MF-H1	L3X3X4	Beam	Single Angle	A572 Gr.50	Typical	1.44	1.23	1.23	0.031
6	MF-P1	PIPE_2.0	Column	Pipe	A53 Gr.B	Typical	1.02	0.627	0.627	1.25
7	Tieback	PIPE_2.0	Beam	Pipe	A53 Gr.B	Typical	1.02	0.627	0.627	1.25
8	FV-1	PIPE_2.5	Column	Pipe	A53 Gr.B	Typical	1.61	1.45	1.45	2.89

Cold Formed Steel Section Sets

	Label	Shape	Type	Design List	Material	Design Rule	Area [in²]	Iyy [in⁴]	Izz [in⁴]	J [in⁴]
1	CF1A	P1000	Beam	CS	A570_33	Typical	0.517	0.165	0.222	0.002

Member Primary Data

	Label	I Node	J Node	Rotate(deg)	Section/Shape	Type	Design List	Material	Design Rule
1	1	8	10	180	MF-H1	Beam	Single Angle	A572 Gr.50	Typical
2	2	7	9	270	MF-H1	Beam	Single Angle	A572 Gr.50	Typical
3	3	4	16	90	F1-H1	Beam	Single Angle	A572 Gr.50	Typical
4	4	6	15		F1-H1	Beam	Single Angle	A572 Gr.50	Typical
5	5	3	18	180	F1-H1	Beam	Single Angle	A572 Gr.50	Typical
6	6	5	17	270	F1-H1	Beam	Single Angle	A572 Gr.50	Typical

Attachment: 1 PC-2022-04 Packet (5951 : AT&T - Special Permit Application)

Member Primary Data (Continued)

	Label	I Node	J Node	Rotate(deg)	Section/Shape	Type	Design List	Material	Design Rule
7	7	14	12	270	F1-H2	Beam	Single Angle	A36 Gr.36	Typical
8	8	11	13	90	F1-H2	Beam	Single Angle	A36 Gr.36	Typical
9	9	19	20	325	F1-V1	Column	Single Angle	A572 Gr.50	Typical
10	10	21	22	325	F1-V1	Column	Single Angle	A572 Gr.50	Typical
11	11	21	20	180	F1-D1	VBrace	Single Angle	A572 Gr.50	Typical
12	12	23	24	135	F1-V1	Column	Single Angle	A572 Gr.50	Typical
13	13	25	26	135	F1-V1	Column	Single Angle	A572 Gr.50	Typical
14	14	25	24	90	F1-D1	VBrace	Single Angle	A572 Gr.50	Typical
15	15	2	28		RIGID	None	None	RIGID	Typical
16	16	1	27		RIGID	None	None	RIGID	Typical
17	17	30	31		FV-1	Column	Pipe	A53 Gr.B	Typical
18	20	34	35		RIGID	None	None	RIGID	Typical
19	21	36	37		RIGID	None	None	RIGID	Typical
20	22	38	39		RIGID	None	None	RIGID	Typical
21	23	40	41		RIGID	None	None	RIGID	Typical
22	24	42	43		MF-P1	Column	Pipe	A53 Gr.B	Typical
23	25	44	45		RIGID	None	None	RIGID	Typical
24	26	46	47		RIGID	None	None	RIGID	Typical
25	27	48	49		MF-P1	Column	Pipe	A53 Gr.B	Typical
26	28	50	51		RIGID	None	None	RIGID	Typical
27	29	52	53		RIGID	None	None	RIGID	Typical
28	30	54	55		MF-P1	Column	Pipe	A53 Gr.B	Typical
29	31	56	57		MF-P1	Column	Pipe	A53 Gr.B	Typical
30	32	58	59		RIGID	None	None	RIGID	Typical
31	33	60	61		RIGID	None	None	RIGID	Typical
32	34	62	63		MF-P1	Column	Pipe	A53 Gr.B	Typical
33	35	64	65		RIGID	None	None	RIGID	Typical
34	36	66	69		RIGID	None	None	RIGID	Typical
35	37	67	68		MF-P1	Column	Pipe	A53 Gr.B	Typical
36	38	70	97		Tieback	Beam	Pipe	A53 Gr.B	Typical
37	39	71	72		RIGID	None	None	RIGID	Typical
38	40	73	74		RIGID	None	None	RIGID	Typical
39	41	75	76		RIGID	None	None	RIGID	Typical
40	42	77	78		RIGID	None	None	RIGID	Typical
41	43	79	80	180	CF1A	Beam	CS	A570_33	Typical
42	44	81	82	180	CF1A	Beam	CS	A570_33	Typical
43	45	83	84		RIGID	None	None	RIGID	Typical
44	46	85	86		RIGID	None	None	RIGID	Typical
45	47	87	88	180	CF1A	Beam	CS	A570_33	Typical
46	48	89	90		RIGID	None	None	RIGID	Typical
47	49	91	92		RIGID	None	None	RIGID	Typical
48	50	93	94	180	CF1A	Beam	CS	A570_33	Typical
49	51	100	101		RIGID	None	None	RIGID	Typical
50	52	98	99		RIGID	None	None	RIGID	Typical
51	M53	102	103		RIGID	None	None	RIGID	Typical
52	M53A	104	105		RIGID	None	None	RIGID	Typical

Member Advanced Data

	Label	I Release	J Release	Physical	Deflection Ratio Options	Seismic DR
1	1			Yes	N/A	None
2	2			Yes	N/A	None
3	3	BenPIN		Yes	N/A	None
4	4	BenPIN		Yes	N/A	None
5	5	BenPIN		Yes	N/A	None
6	6	BenPIN		Yes	N/A	None

Attachment: 1 PC-2022-04 Packet (5951 : AT&T - Special Permit Application)

Member Advanced Data (Continued)

	Label	I Release	J Release	Physical	Deflection Ratio Options	Seismic DR
7	7			Yes	N/A	None
8	8			Yes	N/A	None
9	9	BenPIN	BenPIN	Yes	** NA **	None
10	10	BenPIN	BenPIN	Yes	** NA **	None
11	11	BenPIN	BenPIN	Yes	** NA **	None
12	12	BenPIN	BenPIN	Yes	** NA **	None
13	13	BenPIN	BenPIN	Yes	** NA **	None
14	14	BenPIN	BenPIN	Yes	** NA **	None
15	15			Yes	** NA **	None
16	16			Yes	** NA **	None
17	17			Yes	** NA **	None
18	20			Yes	** NA **	None
19	21			Yes	** NA **	None
20	22			Yes	** NA **	None
21	23			Yes	** NA **	None
22	24			Yes	** NA **	None
23	25			Yes	** NA **	None
24	26			Yes	** NA **	None
25	27			Yes	** NA **	None
26	28			Yes	** NA **	None
27	29			Yes	** NA **	None
28	30			Yes	** NA **	None
29	31			Yes	** NA **	None
30	32			Yes	** NA **	None
31	33			Yes	** NA **	None
32	34			Yes	** NA **	None
33	35			Yes	** NA **	None
34	36			Yes	** NA **	None
35	37			Yes	** NA **	None
36	38	BenPIN		Yes	N/A	None
37	39			Yes	** NA **	None
38	40			Yes	** NA **	None
39	41			Yes	** NA **	None
40	42			Yes	** NA **	None
41	43			Yes	N/A	None
42	44			Yes	N/A	None
43	45			Yes	** NA **	None
44	46			Yes	** NA **	None
45	47			Yes	N/A	None
46	48			Yes	** NA **	None
47	49			Yes	** NA **	None
48	50			Yes	N/A	None
49	51			Yes	** NA **	None
50	52			Yes	** NA **	None
51	M53			Yes	** NA **	None
52	M53A			Yes	** NA **	None

Hot Rolled Steel Design Parameters

	Label	Shape	Length [ft]	Lcomp top [ft]	Channel Conn.	a [ft]	Function
1	1	MF-H1	12.458	Lbyy	N/A	N/A	Lateral
2	2	MF-H1	12.458	Lbyy	N/A	N/A	Lateral
3	3	F1-H1	4.585	Lbyy	N/A	N/A	Lateral
4	4	F1-H1	4.585	Lbyy	N/A	N/A	Lateral
5	5	F1-H1	4.585	Lbyy	N/A	N/A	Lateral
6	6	F1-H1	4.585	Lbyy	N/A	N/A	Lateral

Attachment: 1 PC-2022-04 Packet (5951 : AT&T - Special Permit Application)

Hot Rolled Steel Design Parameters (Continued)

	Label	Shape	Length [ft]	Lcomp top [ft]	Channel Conn.	a [ft]	Function
7	7	F1-H2	1.313	Lbyy	N/A	N/A	Lateral
8	8	F1-H2	1.313	Lbyy	N/A	N/A	Lateral
9	9	F1-V1	3	Lbyy	N/A	N/A	Lateral
10	10	F1-V1	3	Lbyy	N/A	N/A	Lateral
11	11	F1-D1	4.021	Lbyy	N/A	N/A	Lateral
12	12	F1-V1	3	Lbyy	N/A	N/A	Lateral
13	13	F1-V1	3	Lbyy	N/A	N/A	Lateral
14	14	F1-D1	4.021	Lbyy	N/A	N/A	Lateral
15	17	FV-1	6	Lbyy	N/A	N/A	Lateral
16	24	MF-P1	8	Lbyy	N/A	N/A	Lateral
17	27	MF-P1	8	Lbyy	N/A	N/A	Lateral
18	30	MF-P1	8	Lbyy	N/A	N/A	Lateral
19	31	MF-P1	8	Lbyy	N/A	N/A	Lateral
20	34	MF-P1	8	Lbyy	N/A	N/A	Lateral
21	37	MF-P1	5	Lbyy	N/A	N/A	Lateral
22	38	Tieback	7.028	Lbyy	N/A	N/A	Lateral

Cold Formed Steel Design Parameters

	Label	Shape	Length [ft]	Lcomp top [ft]	Function
1	43	CF1A	3	Lbyy	Lateral
2	44	CF1A	3	Lbyy	Lateral
3	47	CF1A	3	Lbyy	Lateral
4	50	CF1A	3	Lbyy	Lateral

Member Point Loads (BLC 1 : Dead)

	Member Label	Direction	Magnitude [k, k-ft]	Location [(ft, %)]
1	31	Y	-0.054	%5
2	31	Y	-0.054	%95
3	31	Y	-0.053	%50
4	31	Y	-0.106	%25
5	31	Y	0	0
6	52	Y	-0.06	%50
7	52	Y	0	0
8	52	Y	0	0
9	52	Y	0	0
10	52	Y	0	0
11	30	Y	-0.037	%5
12	30	Y	-0.037	%35
13	30	Y	-0.037	%60
14	30	Y	-0.037	%95
15	30	Y	0	0
16	27	Y	-0.044	%5
17	27	Y	-0.044	%95
18	27	Y	-0.073	%20
19	27	Y	-0.077	%20
20	27	Y	0	0
21	51	Y	-0.026	%50
22	51	Y	0	0
23	51	Y	0	0
24	51	Y	0	0
25	51	Y	0	0

Attachment: 1 PC-2022-04 Packet (5951 : AT&T - Special Permit Application)

Member Point Loads (BLC 2 : 0 Wind - No Ice)

	Member Label	Direction	Magnitude [k, k-ft]	Location [(ft, %)]
1	31	Z	-0.162	%5
2	31	Z	-0.162	%95
3	31	Z	-0.08	%50
4	31	Z	-0.098	%25
5	31	Z	0	0
6	52	Z	-0.054	%50
7	52	Z	0	0
8	52	Z	0	0
9	52	Z	0	0
10	52	Z	0	0
11	30	Z	-0.062	%5
12	30	Z	-0.062	%35
13	30	Z	-0.062	%60
14	30	Z	-0.062	%95
15	30	Z	0	0
16	27	Z	-0.258	%5
17	27	Z	-0.258	%95
18	27	Z	-0.038	%20
19	27	Z	-0.071	%20
20	27	Z	0	0
21	51	Z	-0.08	%50
22	51	Z	0	0
23	51	Z	0	0
24	51	Z	0	0
25	51	Z	0	0

Member Point Loads (BLC 3 : 90 Wind - No Ice)

	Member Label	Direction	Magnitude [k, k-ft]	Location [(ft, %)]
1	31	X	-0.073	%5
2	31	X	-0.073	%95
3	31	X	-0.046	%50
4	31	X	-0.169	%25
5	31	X	0	0
6	52	X	-0.031	%50
7	52	X	0	0
8	52	X	0	0
9	52	X	0	0
10	52	X	0	0
11	30	X	-0.032	%5
12	30	X	-0.032	%35
13	30	X	-0.032	%60
14	30	X	-0.032	%95
15	30	X	0	0
16	27	X	-0.097	%5
17	27	X	-0.097	%95
18	27	X	-0.048	%20
19	27	X	-0.099	%20
20	27	X	0	0
21	51	X	-0.143	%50
22	51	X	0	0
23	51	X	0	0
24	51	X	0	0
25	51	X	0	0

Attachment: 1 PC-2022-04 Packet (5951 : AT&T - Special Permit Application)

Member Point Loads (BLC 4 : 0 Wind - Ice)

	Member Label	Direction	Magnitude [k, k-ft]	Location [(ft, %)]
1	31	Z	-0.027	%5
2	31	Z	-0.027	%95
3	31	Z	-0.011	%50
4	31	Z	-0.013	%25
5	31	Z	0	0
6	52	Z	-0.007	%50
7	52	Z	0	0
8	52	Z	0	0
9	52	Z	0	0
10	52	Z	0	0
11	30	Z	-0.008	%5
12	30	Z	-0.008	%35
13	30	Z	-0.008	%60
14	30	Z	-0.008	%95
15	30	Z	0	0
16	27	Z	-0.041	%5
17	27	Z	-0.041	%95
18	27	Z	-0.005	%20
19	27	Z	-0.01	%20
20	27	Z	0	0
21	51	Z	-0.011	%50
22	51	Z	0	0
23	51	Z	0	0
24	51	Z	0	0
25	51	Z	0	0

Member Point Loads (BLC 5 : 90 Wind - Ice)

	Member Label	Direction	Magnitude [k, k-ft]	Location [(ft, %)]
1	31	X	-0.015	%5
2	31	X	-0.015	%95
3	31	X	-0.006	%50
4	31	X	-0.023	%25
5	31	X	0	0
6	52	X	-0.004	%50
7	52	X	0	0
8	52	X	0	0
9	52	X	0	0
10	52	X	0	0
11	30	X	-0.004	%5
12	30	X	-0.004	%35
13	30	X	-0.004	%60
14	30	X	-0.004	%95
15	30	X	0	0
16	27	X	-0.019	%5
17	27	X	-0.019	%95
18	27	X	-0.007	%20
19	27	X	-0.013	%20
20	27	X	0	0
21	51	X	-0.019	%50
22	51	X	0	0
23	51	X	0	0
24	51	X	0	0
25	51	X	0	0

Attachment: 1 PC-2022-04 Packet (5951 : AT&T - Special Permit Application)

Member Point Loads (BLC 6 : 0 Wind - Service)

	Member Label	Direction	Magnitude [k, k-ft]	Location [(ft, %)]
1	31	Z	-0.012	%5
2	31	Z	-0.012	%95
3	31	Z	-0.006	%50
4	31	Z	-0.007	%25
5	31	Z	0	0
6	52	Z	-0.004	%50
7	52	Z	0	0
8	52	Z	0	0
9	52	Z	0	0
10	52	Z	0	0
11	30	Z	-0.005	%5
12	30	Z	-0.005	%35
13	30	Z	-0.005	%60
14	30	Z	-0.005	%95
15	30	Z	0	0
16	27	Z	-0.02	%5
17	27	Z	-0.02	%95
18	27	Z	-0.003	%20
19	27	Z	-0.005	%20
20	27	Z	0	0
21	51	Z	-0.006	%50
22	51	Z	0	0
23	51	Z	0	0
24	51	Z	0	0
25	51	Z	0	0

Member Point Loads (BLC 7 : 90 Wind - Service)

	Member Label	Direction	Magnitude [k, k-ft]	Location [(ft, %)]
1	31	X	-0.006	%5
2	31	X	-0.006	%95
3	31	X	-0.004	%50
4	31	X	-0.013	%25
5	31	X	0	0
6	52	X	-0.002	%50
7	52	X	0	0
8	52	X	0	0
9	52	X	0	0
10	52	X	0	0
11	30	X	-0.002	%5
12	30	X	-0.002	%35
13	30	X	-0.002	%60
14	30	X	-0.002	%95
15	30	X	0	0
16	27	X	-0.007	%5
17	27	X	-0.007	%95
18	27	X	-0.004	%20
19	27	X	-0.008	%20
20	27	X	0	0
21	51	X	-0.011	%50
22	51	X	0	0
23	51	X	0	0
24	51	X	0	0
25	51	X	0	0

Attachment: 1 PC-2022-04 Packet (5951 : AT&T - Special Permit Application)

Member Point Loads (BLC 8 : Ice)

	Member Label	Direction	Magnitude [k, k-ft]	Location [(ft, %)]
1	31	Y	-0.191	%5
2	31	Y	-0.191	%95
3	31	Y	-0.07	%50
4	31	Y	-0.14	%25
5	31	Y	0	0
6	52	Y	-0.046	%50
7	52	Y	0	0
8	52	Y	0	0
9	52	Y	0	0
10	52	Y	0	0
11	30	Y	-0.052	%5
12	30	Y	-0.052	%35
13	30	Y	-0.052	%60
14	30	Y	-0.052	%95
15	30	Y	0	0
16	27	Y	-0.207	%5
17	27	Y	-0.207	%95
18	27	Y	-0.045	%20
19	27	Y	-0.088	%20
20	27	Y	0	0
21	51	Y	-0.117	%50
22	51	Y	0	0
23	51	Y	0	0
24	51	Y	0	0
25	51	Y	0	0

Member Point Loads (BLC 9 : 0 Seismic)

	Member Label	Direction	Magnitude [k, k-ft]	Location [(ft, %)]
1	31	Z	-0.051	%5
2	31	Z	-0.051	%95
3	31	Z	-0.025	%50
4	31	Z	-0.025	%25
5	31	Z	0	0
6	52	Z	-0.028	%50
7	52	Z	0	0
8	52	Z	0	0
9	52	Z	0	0
10	52	Z	0	0
11	30	Z	-0.035	%5
12	30	Z	-0.035	%35
13	30	Z	-0.035	%60
14	30	Z	-0.035	%95
15	30	Z	0	0
16	27	Z	-0.042	%5
17	27	Z	-0.042	%95
18	27	Z	-0.035	%20
19	27	Z	-0.037	%20
20	27	Z	0	0
21	51	Z	-0.012	%50
22	51	Z	0	0
23	51	Z	0	0
24	51	Z	0	0
25	51	Z	0	0

Attachment: 1 PC-2022-04 Packet (5951 : AT&T - Special Permit Application)

Member Point Loads (BLC 10 : 90 Seismic)

	Member Label	Direction	Magnitude [k, k-ft]	Location [(ft, %)]
1	31	X	-0.051	%5
2	31	X	-0.051	%95
3	31	X	-0.025	%50
4	31	X	-0.025	%25
5	31	X	0	0
6	52	X	-0.028	%50
7	52	X	0	0
8	52	X	0	0
9	52	X	0	0
10	52	X	0	0
11	30	X	-0.035	%5
12	30	X	-0.035	%35
13	30	X	-0.035	%60
14	30	X	-0.035	%95
15	30	X	0	0
16	27	X	-0.042	%5
17	27	X	-0.042	%95
18	27	X	-0.035	%20
19	27	X	-0.037	%20
20	27	X	0	0
21	51	X	-0.012	%50
22	51	X	0	0
23	51	X	0	0
24	51	X	0	0
25	51	X	0	0

Member Point Loads (BLC 15 : Maint LL 1)

	Member Label	Direction	Magnitude [k, k-ft]	Location [(ft, %)]
1	1	Y	-0.25	%95

Member Point Loads (BLC 16 : Maint LL 2)

	Member Label	Direction	Magnitude [k, k-ft]	Location [(ft, %)]
1	2	Y	-0.25	%95

Member Point Loads (BLC 17 : Maint LL 3)

	Member Label	Direction	Magnitude [k, k-ft]	Location [(ft, %)]
1	3	Y	-0.25	%50

Member Point Loads (BLC 18 : Maint LL 4)

	Member Label	Direction	Magnitude [k, k-ft]	Location [(ft, %)]
1	4	Y	-0.25	%50

Member Point Loads (BLC 19 : Maint LL 5)

	Member Label	Direction	Magnitude [k, k-ft]	Location [(ft, %)]
1	5	Y	-0.25	%50

Attachment: 1 PC-2022-04 Packet (5951 : AT&T - Special Permit Application)

Member Point Loads (BLC 20 : Maint LL 6)

	Member Label	Direction	Magnitude [k, k-ft]	Location [(ft, %)]
1	6	Y	-0.25	%50

Member Distributed Loads (BLC 2 : 0 Wind - No Ice)

	Member Label	Direction	Start Magnitude [k/ft, F, ksf, k-ft/ft]	End Magnitude [k/ft, F, ksf, k-ft/ft]	Start Location [(ft, %)]	End Location [(ft, %)]
1	1	Z	-0.015	-0.015	0	%100
2	2	Z	-0.015	-0.015	0	%100
3	3	Z	-0.013	-0.013	0	%100
4	4	Z	-0.013	-0.013	0	%100
5	5	Z	-0.013	-0.013	0	%100
6	6	Z	-0.013	-0.013	0	%100
7	7	Z	-0.012	-0.012	0	%100
8	8	Z	-0.012	-0.012	0	%100
9	9	Z	-0.009	-0.009	0	%100
10	10	Z	-0.009	-0.009	0	%100
11	11	Z	-0.01	-0.01	0	%100
12	12	Z	-0.009	-0.009	0	%100
13	13	Z	-0.009	-0.009	0	%100
14	14	Z	-0.01	-0.01	0	%100
15	17	Z	-0.008	-0.008	0	%100
16	24	Z	-0.007	-0.007	0	%100
17	27	Z	-0.007	-0.007	0	%100
18	30	Z	-0.007	-0.007	0	%100
19	31	Z	-0.007	-0.007	0	%100
20	34	Z	-0.007	-0.007	0	%100
21	37	Z	-0.007	-0.007	0	%100
22	38	Z	-0.007	-0.007	0	%100
23	43	Z	-0.008	-0.008	0	%100
24	44	Z	-0.008	-0.008	0	%100
25	47	Z	-0.008	-0.008	0	%100
26	50	Z	-0.008	-0.008	0	%100

Member Distributed Loads (BLC 3 : 90 Wind - No Ice)

	Member Label	Direction	Start Magnitude [k/ft, F, ksf, k-ft/ft]	End Magnitude [k/ft, F, ksf, k-ft/ft]	Start Location [(ft, %)]	End Location [(ft, %)]
1	1	X	-0.015	-0.015	0	%100
2	2	X	-0.015	-0.015	0	%100
3	3	X	-0.013	-0.013	0	%100
4	4	X	-0.013	-0.013	0	%100
5	5	X	-0.013	-0.013	0	%100
6	6	X	-0.013	-0.013	0	%100
7	7	X	-0.012	-0.012	0	%100
8	8	X	-0.012	-0.012	0	%100
9	9	X	-0.009	-0.009	0	%100
10	10	X	-0.009	-0.009	0	%100
11	11	X	-0.01	-0.01	0	%100
12	12	X	-0.009	-0.009	0	%100
13	13	X	-0.009	-0.009	0	%100
14	14	X	-0.01	-0.01	0	%100
15	17	X	-0.008	-0.008	0	%100
16	24	X	-0.007	-0.007	0	%100
17	27	X	-0.007	-0.007	0	%100
18	30	X	-0.007	-0.007	0	%100
19	31	X	-0.007	-0.007	0	%100

Attachment: 1 PC-2022-04 Packet (5951 : AT&T - Special Permit Application)

Member Distributed Loads (BLC 3 : 90 Wind - No Ice) (Continued)

	Member Label	Direction	Start Magnitude [k/ft, F, ksf, k-ft/ft]	End Magnitude [k/ft, F, ksf, k-ft/ft]	Start Location [(ft, %)]	End Location [(ft, %)]
20	34	X	-0.007	-0.007	0	%100
21	37	X	-0.007	-0.007	0	%100
22	38	X	-0.007	-0.007	0	%100
23	43	X	-0.008	-0.008	0	%100
24	44	X	-0.008	-0.008	0	%100
25	47	X	-0.008	-0.008	0	%100
26	50	X	-0.008	-0.008	0	%100

Member Distributed Loads (BLC 4 : 0 Wind - Ice)

	Member Label	Direction	Start Magnitude [k/ft, F, ksf, k-ft/ft]	End Magnitude [k/ft, F, ksf, k-ft/ft]	Start Location [(ft, %)]	End Location [(ft, %)]
1	1	Z	-0.004	-0.004	0	%100
2	2	Z	-0.004	-0.004	0	%100
3	3	Z	-0.004	-0.004	0	%100
4	4	Z	-0.004	-0.004	0	%100
5	5	Z	-0.004	-0.004	0	%100
6	6	Z	-0.004	-0.004	0	%100
7	7	Z	-0.004	-0.004	0	%100
8	8	Z	-0.004	-0.004	0	%100
9	9	Z	-0.003	-0.003	0	%100
10	10	Z	-0.003	-0.003	0	%100
11	11	Z	-0.004	-0.004	0	%100
12	12	Z	-0.003	-0.003	0	%100
13	13	Z	-0.003	-0.003	0	%100
14	14	Z	-0.004	-0.004	0	%100
15	17	Z	-0.001	-0.001	0	%100
16	24	Z	-0.001	-0.001	0	%100
17	27	Z	-0.001	-0.001	0	%100
18	30	Z	-0.001	-0.001	0	%100
19	31	Z	-0.001	-0.001	0	%100
20	34	Z	-0.001	-0.001	0	%100
21	37	Z	-0.001	-0.001	0	%100
22	38	Z	-0.001	-0.001	0	%100
23	43	Z	-0.003	-0.003	0	%100
24	44	Z	-0.003	-0.003	0	%100
25	47	Z	-0.003	-0.003	0	%100
26	50	Z	-0.003	-0.003	0	%100

Member Distributed Loads (BLC 5 : 90 Wind - Ice)

	Member Label	Direction	Start Magnitude [k/ft, F, ksf, k-ft/ft]	End Magnitude [k/ft, F, ksf, k-ft/ft]	Start Location [(ft, %)]	End Location [(ft, %)]
1	1	X	-0.004	-0.004	0	%100
2	2	X	-0.004	-0.004	0	%100
3	3	X	-0.004	-0.004	0	%100
4	4	X	-0.004	-0.004	0	%100
5	5	X	-0.004	-0.004	0	%100
6	6	X	-0.004	-0.004	0	%100
7	7	X	-0.004	-0.004	0	%100
8	8	X	-0.004	-0.004	0	%100
9	9	X	-0.003	-0.003	0	%100
10	10	X	-0.003	-0.003	0	%100
11	11	X	-0.004	-0.004	0	%100
12	12	X	-0.003	-0.003	0	%100
13	13	X	-0.003	-0.003	0	%100
14	14	X	-0.004	-0.004	0	%100

Attachment: 1 PC-2022-04 Packet (5951 : AT&T - Special Permit Application)

Member Distributed Loads (BLC 5 : 90 Wind - Ice) (Continued)

	Member Label	Direction	Start Magnitude [k/ft, F, ksf, k-ft/ft]	End Magnitude [k/ft, F, ksf, k-ft/ft]	Start Location [(ft, %)]	End Location [(ft, %)]
15	17	X	-0.001	-0.001	0	%100
16	24	X	-0.001	-0.001	0	%100
17	27	X	-0.001	-0.001	0	%100
18	30	X	-0.001	-0.001	0	%100
19	31	X	-0.001	-0.001	0	%100
20	34	X	-0.001	-0.001	0	%100
21	37	X	-0.001	-0.001	0	%100
22	38	X	-0.001	-0.001	0	%100
23	43	X	-0.003	-0.003	0	%100
24	44	X	-0.003	-0.003	0	%100
25	47	X	-0.003	-0.003	0	%100
26	50	X	-0.003	-0.003	0	%100

Member Distributed Loads (BLC 6 : 0 Wind - Service)

	Member Label	Direction	Start Magnitude [k/ft, F, ksf, k-ft/ft]	End Magnitude [k/ft, F, ksf, k-ft/ft]	Start Location [(ft, %)]	End Location [(ft, %)]
1	1	Z	-0.001	-0.001	0	%100
2	2	Z	-0.001	-0.001	0	%100
3	3	Z	-0.001	-0.001	0	%100
4	4	Z	-0.001	-0.001	0	%100
5	5	Z	-0.001	-0.001	0	%100
6	6	Z	-0.001	-0.001	0	%100
7	7	Z	-0.0009	-0.0009	0	%100
8	8	Z	-0.0009	-0.0009	0	%100
9	9	Z	-0.0006	-0.0006	0	%100
10	10	Z	-0.0006	-0.0006	0	%100
11	11	Z	-0.0007	-0.0007	0	%100
12	12	Z	-0.0006	-0.0006	0	%100
13	13	Z	-0.0006	-0.0006	0	%100
14	14	Z	-0.0007	-0.0007	0	%100
15	17	Z	-0.0003	-0.0003	0	%100
16	24	Z	-0.0003	-0.0003	0	%100
17	27	Z	-0.0003	-0.0003	0	%100
18	30	Z	-0.0003	-0.0003	0	%100
19	31	Z	-0.0003	-0.0003	0	%100
20	34	Z	-0.0003	-0.0003	0	%100
21	37	Z	-0.0003	-0.0003	0	%100
22	38	Z	-0.0003	-0.0003	0	%100
23	43	Z	-0.0006	-0.0006	0	%100
24	44	Z	-0.0006	-0.0006	0	%100
25	47	Z	-0.0006	-0.0006	0	%100
26	50	Z	-0.0006	-0.0006	0	%100

Member Distributed Loads (BLC 7 : 90 Wind - Service)

	Member Label	Direction	Start Magnitude [k/ft, F, ksf, k-ft/ft]	End Magnitude [k/ft, F, ksf, k-ft/ft]	Start Location [(ft, %)]	End Location [(ft, %)]
1	1	X	-0.001	-0.001	0	%100
2	2	X	-0.001	-0.001	0	%100
3	3	X	-0.001	-0.001	0	%100
4	4	X	-0.001	-0.001	0	%100
5	5	X	-0.001	-0.001	0	%100
6	6	X	-0.001	-0.001	0	%100
7	7	X	-0.0009	-0.0009	0	%100
8	8	X	-0.0009	-0.0009	0	%100
9	9	X	-0.0006	-0.0006	0	%100

Attachment: 1 PC-2022-04 Packet (5951 : AT&T - Special Permit Application)

Member Distributed Loads (BLC 7 : 90 Wind - Service) (Continued)

	Member Label	Direction	Start Magnitude [k/ft, F, ksf, k-ft/ft]	End Magnitude [k/ft, F, ksf, k-ft/ft]	Start Location [(ft, %)]	End Location [(ft, %)]
10	10	X	-0.0006	-0.0006	0	%100
11	11	X	-0.0007	-0.0007	0	%100
12	12	X	-0.0006	-0.0006	0	%100
13	13	X	-0.0006	-0.0006	0	%100
14	14	X	-0.0007	-0.0007	0	%100
15	17	X	-0.0003	-0.0003	0	%100
16	24	X	-0.0003	-0.0003	0	%100
17	27	X	-0.0003	-0.0003	0	%100
18	30	X	-0.0003	-0.0003	0	%100
19	31	X	-0.0003	-0.0003	0	%100
20	34	X	-0.0003	-0.0003	0	%100
21	37	X	-0.0003	-0.0003	0	%100
22	38	X	-0.0003	-0.0003	0	%100
23	43	X	-0.0006	-0.0006	0	%100
24	44	X	-0.0006	-0.0006	0	%100
25	47	X	-0.0006	-0.0006	0	%100
26	50	X	-0.0006	-0.0006	0	%100

Member Distributed Loads (BLC 8 : Ice)

	Member Label	Direction	Start Magnitude [k/ft, F, ksf, k-ft/ft]	End Magnitude [k/ft, F, ksf, k-ft/ft]	Start Location [(ft, %)]	End Location [(ft, %)]
1	1	Y	-0.012	-0.012	0	%100
2	2	Y	-0.012	-0.012	0	%100
3	3	Y	-0.012	-0.012	0	%100
4	4	Y	-0.012	-0.012	0	%100
5	5	Y	-0.012	-0.012	0	%100
6	6	Y	-0.012	-0.012	0	%100
7	7	Y	-0.017	-0.017	0	%100
8	8	Y	-0.017	-0.017	0	%100
9	9	Y	-0.009	-0.009	0	%100
10	10	Y	-0.009	-0.009	0	%100
11	11	Y	-0.009	-0.009	0	%100
12	12	Y	-0.009	-0.009	0	%100
13	13	Y	-0.009	-0.009	0	%100
14	14	Y	-0.009	-0.009	0	%100
15	17	Y	-0.009	-0.009	0	%100
16	24	Y	-0.008	-0.008	0	%100
17	27	Y	-0.008	-0.008	0	%100
18	30	Y	-0.008	-0.008	0	%100
19	31	Y	-0.008	-0.008	0	%100
20	34	Y	-0.008	-0.008	0	%100
21	37	Y	-0.008	-0.008	0	%100
22	38	Y	-0.008	-0.008	0	%100
23	43	Y	-0.008	-0.008	0	%100
24	44	Y	-0.008	-0.008	0	%100
25	47	Y	-0.008	-0.008	0	%100
26	50	Y	-0.008	-0.008	0	%100

Member Distributed Loads (BLC 9 : 0 Seismic)

	Member Label	Direction	Start Magnitude [k/ft, F, ksf, k-ft/ft]	End Magnitude [k/ft, F, ksf, k-ft/ft]	Start Location [(ft, %)]	End Location [(ft, %)]
1	1	Z	-0.002	-0.002	0	%100
2	2	Z	-0.002	-0.002	0	%100
3	3	Z	-0.002	-0.002	0	%100
4	4	Z	-0.002	-0.002	0	%100

Attachment: 1 PC-2022-04 Packet (5951 : AT&T - Special Permit Application)

Member Distributed Loads (BLC 9 : 0 Seismic) (Continued)

	Member Label	Direction	Start Magnitude [k/ft, F, ksf, k-ft/ft]	End Magnitude [k/ft, F, ksf, k-ft/ft]	Start Location [(ft, %)]	End Location [(ft, %)]
5	5	Z	-0.002	-0.002	0	%100
6	6	Z	-0.002	-0.002	0	%100
7	7	Z	-0.006	-0.006	0	%100
8	8	Z	-0.006	-0.006	0	%100
9	9	Z	-0.001	-0.001	0	%100
10	10	Z	-0.001	-0.001	0	%100
11	11	Z	-0.001	-0.001	0	%100
12	12	Z	-0.001	-0.001	0	%100
13	13	Z	-0.001	-0.001	0	%100
14	14	Z	-0.001	-0.001	0	%100
15	17	Z	-0.003	-0.003	0	%100
16	24	Z	-0.002	-0.002	0	%100
17	27	Z	-0.002	-0.002	0	%100
18	30	Z	-0.002	-0.002	0	%100
19	31	Z	-0.002	-0.002	0	%100
20	34	Z	-0.002	-0.002	0	%100
21	37	Z	-0.002	-0.002	0	%100
22	38	Z	-0.002	-0.002	0	%100
23	43	Z	-0.0008	-0.0008	0	%100
24	44	Z	-0.0008	-0.0008	0	%100
25	47	Z	-0.0008	-0.0008	0	%100
26	50	Z	-0.0008	-0.0008	0	%100

Member Distributed Loads (BLC 10 : 90 Seismic)

	Member Label	Direction	Start Magnitude [k/ft, F, ksf, k-ft/ft]	End Magnitude [k/ft, F, ksf, k-ft/ft]	Start Location [(ft, %)]	End Location [(ft, %)]
1	1	X	-0.002	-0.002	0	%100
2	2	X	-0.002	-0.002	0	%100
3	3	X	-0.002	-0.002	0	%100
4	4	X	-0.002	-0.002	0	%100
5	5	X	-0.002	-0.002	0	%100
6	6	X	-0.002	-0.002	0	%100
7	7	X	-0.006	-0.006	0	%100
8	8	X	-0.006	-0.006	0	%100
9	9	X	-0.001	-0.001	0	%100
10	10	X	-0.001	-0.001	0	%100
11	11	X	-0.001	-0.001	0	%100
12	12	X	-0.001	-0.001	0	%100
13	13	X	-0.001	-0.001	0	%100
14	14	X	-0.001	-0.001	0	%100
15	17	X	-0.003	-0.003	0	%100
16	24	X	-0.002	-0.002	0	%100
17	27	X	-0.002	-0.002	0	%100
18	30	X	-0.002	-0.002	0	%100
19	31	X	-0.002	-0.002	0	%100
20	34	X	-0.002	-0.002	0	%100
21	37	X	-0.002	-0.002	0	%100
22	38	X	-0.002	-0.002	0	%100
23	43	X	-0.0008	-0.0008	0	%100
24	44	X	-0.0008	-0.0008	0	%100
25	47	X	-0.0008	-0.0008	0	%100
26	50	X	-0.0008	-0.0008	0	%100

Attachment: 1 PC-2022-04 Packet (5951 : AT&T - Special Permit Application)

Node Loads and Enforced Displacements (BLC 11 : Live Load a)

	Node Label	L, D, M	Direction	Magnitude [(k, k-ft), (in, rad), (k*s²/ft, k*s²*ft)]
1	36	L	Y	-0.5

Node Loads and Enforced Displacements (BLC 12 : Live Load b)

	Node Label	L, D, M	Direction	Magnitude [(k, k-ft), (in, rad), (k*s²/ft, k*s²*ft)]
1	46	L	Y	-0.5

Node Loads and Enforced Displacements (BLC 13 : Live Load c)

	Node Label	L, D, M	Direction	Magnitude [(k, k-ft), (in, rad), (k*s²/ft, k*s²*ft)]
1	52	L	Y	-0.5

Node Loads and Enforced Displacements (BLC 14 : Live Load d)

	Node Label	L, D, M	Direction	Magnitude [(k, k-ft), (in, rad), (k*s²/ft, k*s²*ft)]
1	60	L	Y	-0.5

Node Loads and Enforced Displacements (BLC 39 : Live Load e)

	Node Label	L, D, M	Direction	Magnitude [(k, k-ft), (in, rad), (k*s²/ft, k*s²*ft)]
1	40	L	Y	-0.5

Basic Load Cases

	BLC Description	Category	Y Gravity	Nodal	Point	Distributed
1	Dead	DL	-1		25	
2	0 Wind - No Ice	WLZ			25	26
3	90 Wind - No Ice	WLX			25	26
4	0 Wind - Ice	WLZ			25	26
5	90 Wind - Ice	WLX			25	26
6	0 Wind - Service	WLZ			25	26
7	90 Wind - Service	WLX			25	26
8	Ice	OL1			25	26
9	0 Seismic	ELZ			25	26
10	90 Seismic	ELX			25	26
11	Live Load a	LL		1		
12	Live Load b	LL		1		
13	Live Load c	LL		1		
14	Live Load d	LL		1		
15	Maint LL 1	LL			1	
16	Maint LL 2	LL			1	
17	Maint LL 3	LL			1	
18	Maint LL 4	LL			1	
19	Maint LL 5	LL			1	
20	Maint LL 6	LL			1	
21	Maint LL 7	LL				
22	Maint LL 8	LL				
23	Maint LL 9	LL				
24	Maint LL 10	LL				
25	Maint LL 11	LL				
26	Maint LL 12	LL				
27	Maint LL 13	LL				
28	Maint LL 14	LL				

Attachment: 1 PC-2022-04 Packet (5951 : AT&T - Special Permit Application)

Basic Load Cases (Continued)

	BLC Description	Category	Y Gravity	Nodal	Point	Distributed
29	Maint LL 15	LL				
30	Maint LL 16	LL				
31	Maint LL 17	LL				
32	Maint LL 18	LL				
33	Maint LL 19	LL				
34	Maint LL 20	LL				
35	Maint LL 21	LL				
36	Maint LL 22	LL				
37	Maint LL 23	LL				
38	Maint LL 24	LL				
39	Live Load e	LL		1		

Load Combinations

	Description	Solve	P-Delta	BLC	Factor	BLC	Factor	BLC	Factor	BLC	Factor
1	1.4 Dead	Yes	Y	1	1.4						
2	1.2 D + 1.0 - 0 W	Yes	Y	1	1.2	2	1				
3	1.2 D + 1.0 - 30 W	Yes	Y	1	1.2	2	0.866	3	0.5		
4	1.2 D + 1.0 - 60 W	Yes	Y	1	1.2	3	0.866	2	0.5		
5	1.2 D + 1.0 - 90 W	Yes	Y	1	1.2	3	1				
6	1.2 D + 1.0 - 120 W	Yes	Y	1	1.2	3	0.866	2	-0.5		
7	1.2 D + 1.0 - 150 W	Yes	Y	1	1.2	2	-0.866	3	0.5		
8	1.2 D + 1.0 - 180 W	Yes	Y	1	1.2	2	-1				
9	1.2 D + 1.0 - 210 W	Yes	Y	1	1.2	2	-0.866	3	-0.5		
10	1.2 D + 1.0 - 240 W	Yes	Y	1	1.2	3	-0.866	2	-0.5		
11	1.2 D + 1.0 - 270 W	Yes	Y	1	1.2	3	-1				
12	1.2 D + 1.0 - 300 W	Yes	Y	1	1.2	3	-0.866	2	0.5		
13	1.2 D + 1.0 - 330 W	Yes	Y	1	1.2	2	0.866	3	-0.5		
14	1.2 D + 1.0 - 0 W/Ice	Yes	Y	1	1.2	4	1			8	1
15	1.2 D + 1.0 - 30 W/Ice	Yes	Y	1	1.2	4	0.866	5	0.5	8	1
16	1.2 D + 1.0 - 60 W/Ice	Yes	Y	1	1.2	5	0.866	4	0.5	8	1
17	1.2 D + 1.0 - 90 W/Ice	Yes	Y	1	1.2	5	1			8	1
18	1.2 D + 1.0 - 120 W/Ice	Yes	Y	1	1.2	5	0.866	4	-0.5	8	1
19	1.2 D + 1.0 - 150 W/Ice	Yes	Y	1	1.2	4	-0.866	5	0.5	8	1
20	1.2 D + 1.0 - 180 W/Ice	Yes	Y	1	1.2	4	-1			8	1
21	1.2 D + 1.0 - 210 W/Ice	Yes	Y	1	1.2	4	-0.866	5	-0.5	8	1
22	1.2 D + 1.0 - 240 W/Ice	Yes	Y	1	1.2	5	-0.866	4	-0.5	8	1
23	1.2 D + 1.0 - 270 W/Ice	Yes	Y	1	1.2	5	-1			8	1
24	1.2 D + 1.0 - 300 W/Ice	Yes	Y	1	1.2	5	-0.866	4	0.5	8	1
25	1.2 D + 1.0 - 330 W/Ice	Yes	Y	1	1.2	4	0.866	5	-0.5	8	1
26	1.2 D + 1.0 E - 0	Yes	Y	1	1.2	9	1				
27	1.2 D + 1.0 E - 30	Yes	Y	1	1.2	9	0.866	10	0.5		
28	1.2 D + 1.0 E - 60	Yes	Y	1	1.2	10	0.866	9	0.5		
29	1.2 D + 1.0 E - 90	Yes	Y	1	1.2	10	1				
30	1.2 D + 1.0 E - 120	Yes	Y	1	1.2	10	0.866	9	-0.5		
31	1.2 D + 1.0 E - 150	Yes	Y	1	1.2	9	-0.866	10	0.5		
32	1.2 D + 1.0 E - 180	Yes	Y	1	1.2	9	-1				
33	1.2 D + 1.0 E - 210	Yes	Y	1	1.2	9	-0.866	10	-0.5		
34	1.2 D + 1.0 E - 240	Yes	Y	1	1.2	10	-0.866	9	-0.5		
35	1.2 D + 1.0 E - 270	Yes	Y	1	1.2	10	-1				
36	1.2 D + 1.0 E - 300	Yes	Y	1	1.2	10	-0.866	9	0.5		
37	1.2 D + 1.0 E - 330	Yes	Y	1	1.2	9	0.866	10	-0.5		
38	1.2 D + 1.5 LL a + Service - 0 W	Yes	Y	1	1.2	6	1			11	1.5
39	1.2 D + 1.5 LL a + Service - 30 W	Yes	Y	1	1.2	6	0.866	7	0.5	11	1.5
40	1.2 D + 1.5 LL a + Service - 60 W	Yes	Y	1	1.2	7	0.866	6	0.5	11	1.5
41	1.2 D + 1.5 LL a + Service - 90 W	Yes	Y	1	1.2	7	1			11	1.5

Attachment: 1 PC-2022-04 Packet (5951 : AT&T - Special Permit Application)

Load Combinations (Continued)

	Description	Solve	P-Delta	BLC	Factor	BLC	Factor	BLC	Factor	BLC	Factor
42	1.2 D + 1.5 LL a + Service - 120 W	Yes	Y	1	1.2	7	0.866	6	-0.5	11	1.5
43	1.2 D + 1.5 LL a + Service - 150 W	Yes	Y	1	1.2	6	-0.866	7	0.5	11	1.5
44	1.2 D + 1.5 LL a + Service - 180 W	Yes	Y	1	1.2	6	-1			11	1.5
45	1.2 D + 1.5 LL a + Service - 210 W	Yes	Y	1	1.2	6	-0.866	7	-0.5	11	1.5
46	1.2 D + 1.5 LL a + Service - 240 W	Yes	Y	1	1.2	7	-0.866	6	-0.5	11	1.5
47	1.2 D + 1.5 LL a + Service - 270 W	Yes	Y	1	1.2	7	-1			11	1.5
48	1.2 D + 1.5 LL a + Service - 300 W	Yes	Y	1	1.2	7	-0.866	6	0.5	11	1.5
49	1.2 D + 1.5 LL a + Service - 330 W	Yes	Y	1	1.2	6	0.866	7	-0.5	11	1.5
50	1.2 D + 1.5 LL b + Service - 0 W	Yes	Y	1	1.2	6	1			12	1.5
51	1.2 D + 1.5 LL b + Service - 30 W	Yes	Y	1	1.2	6	0.866	7	0.5	12	1.5
52	1.2 D + 1.5 LL b + Service - 60 W	Yes	Y	1	1.2	7	0.866	6	0.5	12	1.5
53	1.2 D + 1.5 LL b + Service - 90 W	Yes	Y	1	1.2	7	1			12	1.5
54	1.2 D + 1.5 LL b + Service - 120 W	Yes	Y	1	1.2	7	0.866	6	-0.5	12	1.5
55	1.2 D + 1.5 LL b + Service - 150 W	Yes	Y	1	1.2	6	-0.866	7	0.5	12	1.5
56	1.2 D + 1.5 LL b + Service - 180 W	Yes	Y	1	1.2	6	-1			12	1.5
57	1.2 D + 1.5 LL b + Service - 210 W	Yes	Y	1	1.2	6	-0.866	7	-0.5	12	1.5
58	1.2 D + 1.5 LL b + Service - 240 W	Yes	Y	1	1.2	7	-0.866	6	-0.5	12	1.5
59	1.2 D + 1.5 LL b + Service - 270 W	Yes	Y	1	1.2	7	-1			12	1.5
60	1.2 D + 1.5 LL b + Service - 300 W	Yes	Y	1	1.2	7	-0.866	6	0.5	12	1.5
61	1.2 D + 1.5 LL b + Service - 330 W	Yes	Y	1	1.2	6	0.866	7	-0.5	12	1.5
62	1.2 D + 1.5 LL c + Service - 0 W	Yes	Y	1	1.2	6	1			13	1.5
63	1.2 D + 1.5 LL c + Service - 30 W	Yes	Y	1	1.2	6	0.866	7	0.5	13	1.5
64	1.2 D + 1.5 LL c + Service - 60 W	Yes	Y	1	1.2	7	0.866	6	0.5	13	1.5
65	1.2 D + 1.5 LL c + Service - 90 W	Yes	Y	1	1.2	7	1			13	1.5
66	1.2 D + 1.5 LL c + Service - 120 W	Yes	Y	1	1.2	7	0.866	6	-0.5	13	1.5
67	1.2 D + 1.5 LL c + Service - 150 W	Yes	Y	1	1.2	6	-0.866	7	0.5	13	1.5
68	1.2 D + 1.5 LL c + Service - 180 W	Yes	Y	1	1.2	6	-1			13	1.5
69	1.2 D + 1.5 LL c + Service - 210 W	Yes	Y	1	1.2	6	-0.866	7	-0.5	13	1.5
70	1.2 D + 1.5 LL c + Service - 240 W	Yes	Y	1	1.2	7	-0.866	6	-0.5	13	1.5
71	1.2 D + 1.5 LL c + Service - 270 W	Yes	Y	1	1.2	7	-1			13	1.5
72	1.2 D + 1.5 LL c + Service - 300 W	Yes	Y	1	1.2	7	-0.866	6	0.5	13	1.5
73	1.2 D + 1.5 LL c + Service - 330 W	Yes	Y	1	1.2	6	0.866	7	-0.5	13	1.5
74	1.2 D + 1.5 LL d + Service - 0 W	Yes	Y	1	1.2	6	1			14	1.5
75	1.2 D + 1.5 LL d + Service - 30 W	Yes	Y	1	1.2	6	0.866	7	0.5	14	1.5
76	1.2 D + 1.5 LL d + Service - 60 W	Yes	Y	1	1.2	7	0.866	6	0.5	14	1.5
77	1.2 D + 1.5 LL d + Service - 90 W	Yes	Y	1	1.2	7	1			14	1.5
78	1.2 D + 1.5 LL d + Service - 120 W	Yes	Y	1	1.2	7	0.866	6	-0.5	14	1.5
79	1.2 D + 1.5 LL d + Service - 150 W	Yes	Y	1	1.2	6	-0.866	7	0.5	14	1.5
80	1.2 D + 1.5 LL d + Service - 180 W	Yes	Y	1	1.2	6	-1			14	1.5
81	1.2 D + 1.5 LL d + Service - 210 W	Yes	Y	1	1.2	6	-0.866	7	-0.5	14	1.5
82	1.2 D + 1.5 LL d + Service - 240 W	Yes	Y	1	1.2	7	-0.866	6	-0.5	14	1.5
83	1.2 D + 1.5 LL d + Service - 270 W	Yes	Y	1	1.2	7	-1			14	1.5
84	1.2 D + 1.5 LL d + Service - 300 W	Yes	Y	1	1.2	7	-0.866	6	0.5	14	1.5
85	1.2 D + 1.5 LL d + Service - 330 W	Yes	Y	1	1.2	6	0.866	7	-0.5	14	1.5
86	1.2 D + 1.5 LL Maint (1)	Yes	Y	1	1.2					15	1.5
87	1.2 D + 1.5 LL Maint (2)	Yes	Y	1	1.2					16	1.5
88	1.2 D + 1.5 LL Maint (3)	Yes	Y	1	1.2					17	1.5
89	1.2 D + 1.5 LL Maint (4)	Yes	Y	1	1.2					18	1.5
90	1.2 D + 1.5 LL Maint (5)	Yes	Y	1	1.2					19	1.5
91	1.2 D + 1.5 LL Maint (6)	Yes	Y	1	1.2					20	1.5
92	1.2 D + 1.5 LL Maint (7)	Yes	Y	1	1.2					21	1.5
93	1.2 D + 1.5 LL Maint (8)	Yes	Y	1	1.2					22	1.5
94	1.2 D + 1.5 LL Maint (9)	Yes	Y	1	1.2					23	1.5
95	1.2 D + 1.5 LL Maint (10)	Yes	Y	1	1.2					24	1.5
96	1.2 D + 1.5 LL Maint (11)	Yes	Y	1	1.2					25	1.5

Attachment: 1 PC-2022-04 Packet (5951 : AT&T - Special Permit Application)

Load Combinations (Continued)

	Description	Solve	P-Delta	BLC	Factor	BLC	Factor	BLC	Factor	BLC	Factor
97	1.2 D + 1.5 LL Maint (12)	Yes	Y	1	1.2					26	1.5
98	1.2 D + 1.5 LL Maint (13)	Yes	Y	1	1.2					27	1.5
99	1.2 D + 1.5 LL Maint (14)	Yes	Y	1	1.2					28	1.5
100	1.2 D + 1.5 LL Maint (15)	Yes	Y	1	1.2					29	1.5
101	1.2 D + 1.5 LL Maint (16)	Yes	Y	1	1.2					30	1.5
102	1.2 D + 1.5 LL Maint (17)	Yes	Y	1	1.2					31	1.5
103	1.2 D + 1.5 LL Maint (18)	Yes	Y	1	1.2					32	1.5
104	1.2 D + 1.5 LL Maint (19)	Yes	Y	1	1.2					33	1.5
105	1.2 D + 1.5 LL Maint (20)	Yes	Y	1	1.2					34	1.5
106	1.2 D + 1.5 LL Maint (21)	Yes	Y	1	1.2					35	1.5
107	1.2 D + 1.5 LL Maint (22)	Yes	Y	1	1.2					36	1.5
108	1.2 D + 1.5 LL Maint (23)	Yes	Y	1	1.2					37	1.5
109	1.2 D + 1.5 LL Maint (24)	Yes	Y	1	1.2					38	1.5
110	1.2 D + 1.5 LL e + Service - 0 W	Yes	Y	1	1.2	6	1			39	1.5
111	1.2 D + 1.5 LL e + Service - 30 W	Yes	Y	1	1.2	6	0.866	7	0.5	39	1.5
112	1.2 D + 1.5 LL e + Service - 60 W	Yes	Y	1	1.2	7	0.866	6	0.5	39	1.5
113	1.2 D + 1.5 LL e + Service - 90 W	Yes	Y	1	1.2	7	1			39	1.5
114	1.2 D + 1.5 LL e + Service - 120 W	Yes	Y	1	1.2	7	0.866	6	-0.5	39	1.5
115	1.2 D + 1.5 LL e + Service - 150 W	Yes	Y	1	1.2	6	-0.866	7	0.5	39	1.5
116	1.2 D + 1.5 LL e + Service - 180 W	Yes	Y	1	1.2	6	-1			39	1.5
117	1.2 D + 1.5 LL e + Service - 210 W	Yes	Y	1	1.2	6	-0.866	7	-0.5	39	1.5
118	1.2 D + 1.5 LL e + Service - 240 W	Yes	Y	1	1.2	7	-0.866	6	-0.5	39	1.5
119	1.2 D + 1.5 LL e + Service - 270 W	Yes	Y	1	1.2	7	-1			39	1.5
120	1.2 D + 1.5 LL e + Service - 300 W	Yes	Y	1	1.2	7	-0.866	6	0.5	39	1.5
121	1.2 D + 1.5 LL e + Service - 330 W	Yes	Y	1	1.2	6	0.866	7	-0.5	39	1.5

Envelope Node Reactions

	Node Label		X [k]	LC	Y [k]	LC	Z [k]	LC	MX [k-ft]	LC	MY [k-ft]	LC	MZ [k-ft]	LC
1	97	max	0.755	12	0.043	24	1.131	6	0	121	0	121	0	121
2		min	-0.769	6	0.013	6	-1.121	12	0	1	0	1	0	1
3	103	max	1.201	5	2.199	19	0.846	2	0.763	8	1.198	5	0.455	5
4		min	-2.066	11	0.649	13	-3.302	20	-0.698	2	-1.445	11	-0.621	11
5	105	max	1.835	5	2.107	25	3.246	25	0.669	13	1.136	5	0.523	11
6		min	-0.948	11	0.625	7	-0.562	7	-0.576	7	-0.962	11	-0.7	5
7	Totals:	max	2.315	5	4.311	18	2.821	2						
8		min	-2.315	11	1.493	12	-2.821	8						

Envelope AISC 15TH (360-16): LRFD Member Steel Code Checks

	Member	Shape	Code Check	Loc[ft]	LC	Shear Check	Loc[ft]	Dir	LC	phi*Pnc [k]	phi*Pnt [k]	phi*Mn y-y [k-ft]	phi*Mn z-z [k-ft]	Cb	Eqn
1	1	L3X3X4	0.593	10.512	8	0.069	1.947	z	13	4.981	64.8	2.345	3.34	1.5	H2-1
2	2	L3X3X4	0.559	1.947	6	0.063	0.649	z	6	4.981	64.8	2.345	3.34	1.5	H2-1
3	3	L3X3X3	0.385	0.955	18	0.058	4.585	z	18	24.382	49.05	1.833	3.341	1.5	H2-1
4	4	L3X3X3	0.459	0.955	24	0.051	4.585	y	18	24.382	49.05	1.833	3.341	1.5	H2-1
5	5	L3X3X3	0.608	0.955	22	0.097	4.585	y	24	24.382	49.05	1.638	3.341	1.5	H2-1
6	6	L3X3X3	0.714	0.955	25	0.094	4.585	z	24	24.382	49.05	1.833	3.341	1.5	H2-1
7	7	L6X4X6	0.22	0.656	23	0.325	0.656	z	23	106.459	116.964	5.109	14.731	1.428	H2-1
8	8	L6X4X6	0.204	0.656	14	0.301	0.656	y	15	106.459	116.964	5.109	15.351	1.45	H2-1
9	9	L2X2X3	0.095	1.75	18	0.06	3	y	20	17.369	32.49	0.775	1.575	1.461	H2-1
10	10	L2X2X3	0.099	2.75	23	0.032	3	y	11	17.369	32.49	0.775	1.583	1.5	H2-1
11	11	L2X2X3	0.119	2.01	23	0.005	4.021	z	8	10.602	32.49	0.775	1.379	1.136	H2-1
12	12	L2X2X3	0.165	1.25	14	0.031	0	z	5	17.369	32.49	0.775	1.583	1.5	H2-1
13	13	L2X2X3	0.212	0.75	12	0.024	0	y	12	17.369	32.49	0.775	1.534	1.288	H2-1
14	14	L2X2X3	0.172	2.01	16	0.007	4.021	z	23	10.602	32.49	0.775	1.379	1.136	H2-1

Attachment: 1 PC-2022-04 Packet (5951 : AT&T - Special Permit Application)

Envelope AISC 15TH (360-16): LRFD Member Steel Code Checks (Continued)

	Member	Shape	Code Check	Loc[ft]	LC	Shear Check	Loc[ft]	Dir	LC	phi*Pnc [k]	phi*Pnt [k]	phi*Mn y-y [k-ft]	phi*Mn z-z [k-ft]	Cb	Eqn
15	17	PIPE_2.5	0.408	1	6	0.442	1		11	37.774	50.715	3.596	3.596	1	H3-6
16	24	PIPE_2.0	0.102	6	41	0.094	3		12	14.916	32.13	1.872	1.872	1	H1-1b
17	27	PIPE_2.0	0.474	3	8	0.138	3		13	14.916	32.13	1.872	1.872	1	H1-1b
18	30	PIPE_2.0	0.206	3	13	0.046	6		11	14.916	32.13	1.872	1.872	1	H1-1b
19	31	PIPE_2.0	0.321	3	8	0.102	3		13	14.916	32.13	1.872	1.872	1	H1-1b
20	34	PIPE_2.0	0.21	5.5	72	0.074	2.5		64	14.916	32.13	1.872	1.872	1	H1-1b
21	37	PIPE_2.0	0.252	3.49	12	0.239	3.958		12	23.809	32.13	1.872	1.872	1	H1-1b
22	38	PIPE_2.0	0.079	0	6	0.004	7.028		22	17.772	32.13	1.872	1.872	1	H1-1b*

Envelope AISI S100-16: LRFD Member Cold Formed Steel Code Checks

	Member	Shape	Code Check	Loc[ft]	LC	Shear Check	Loc[ft]	Dir	LC	phi*Pn[k]	phi*Tn[k]	phi*Mnyy[k-ft]	phi*Mnzz[k-ft]	phi*Vny[k]	phi*Vnz[k]	Cb	Eqn
1	43	P1000	0.077	2.812	23	0.012	2.812	y	23	14.502	15.355	0.431	0.676	2.36	4.72	2.532	H1.2-1
2	44	P1000	0.041	2.812	23	0.014	2.812	y	42	8.555	15.355	0.432	0.676	2.36	4.72	2.077	H2-1
3	47	P1000	0.234	0.75	12	0.072	2.25	y	11	14.502	15.355	0.423	0.676	2.36	4.72	1.901	H1.2-1
4	50	P1000	0.241	2.25	12	0.07	2.812	y	17	14.502	15.355	0.423	0.676	2.36	4.72	1.462	H1.2-1

Attachment: 1 PC-2022-04 Packet (5951 : AT&T - Special Permit Application)

APPENDIX B

Additional Calculations

Attachment: 1 PC-2022-04 Packet (5951 : AT&T - Special Permit Application)

PROJECT	**160864.001.01 - Casady Square, OK**	**KSC**
SUBJECT	**Sector Mount Analysis**	
DATE	**05/04/22**	

B+T Group
1717 S. Boulder, Suite 300
Tulsa, OK 74119
(918) 587-4630

Tower Type		:	Other		
Ground Elevation	z_s	:	1217	ft	[ASCE7 Hazard Tool]
Tower Height		:	129.00	ft	
Mount Elevation		:	70.00	ft	
Antenna Elevation		:	70.00	ft	
Crest Height		:	0	ft	
Risk Category		:	II		[Table 2-1]
Exposure Category		:	C		[Sec. 2.6.5.1.2]
Topography Category		:	1.00		[Sec. 2.6.6.2]
Wind Velocity	V	:	109	mph	[ASCE7 Hazard Tool]
Ice wind Velocity	V_i	:	40	mph	[ASCE7 Hazard Tool]
Service Velocity	V_s	:	30	mph	[ASCE7 Hazard Tool]
Base Ice thickness	t_i	:	1.50	in	[ASCE7 Hazard Tool]
Seismic Design Cat.		:	B		[ASCE7 Hazard Tool]
	S_S	:	0.31		
	S_1	:	0.08		
	S_{DS}	:	0.32		
	S_{D1}	:	0.13		
Gust Factor	G_h	:	1.00		[Sec. 16.6]
Pressure Coefficient	K_z	:	1.17		[Sec. 2.6.5.2]
Topography Facto	K_{zt}	:	1.00		[Sec. 2.6.6]
Elevation Factor	K_e	:	0.96		[Sec. 2.6.8]
Directionality Factor	K_d	:	0.95		[Sec. 16.6]
Shielding Factor	K_a	:	0.90		[Sec. 16.6]
Design Ice Thickness	t_{iz}	:	1.62	in	[Sec. 2.6.10]
Importance Factor	I_e	:	1		[Table 2-3]
Response Coefficient	C_s	:	0.158		[Sec. 2.7.7.1]
Amplification	A_s	:	3		[Sec. 16.7]
	q_z	:	32.46	psf	

Attachment: 1 PC-2022-04 Packet (5951 : AT&T - Special Permit Application)

PROJECT	**160864.001.01 - Casady Square, OK**	**KSC**
SUBJECT	**Sector Mount Analysis**	
DATE	**05/04/22**	

B+T Group
1717 S. Boulder, Suite 300
Tulsa, OK 74119
(918) 587-4630

Manufacturer	Model	Qty	Height (in^2)	Width (in^2)	Depth (in^2)	Weight (lbs)	C_aA_a (N) (ft^2)	C_aA_a (T) (ft^2)	C_aA_a (N) Ice (ft^2)	C_aA_a (T) Ice (ft^2)	$F_{A\,(N)}$ (k)	$F_{A\,(T)}$ (k)	$F_{A\,(N)}$ Ice (k)	$F_{A\,(T)}$ Ice (k)
KATHREIN	80010799	0.5	106.0	14.8	6.7	108.0	4.99	2.26	6.18	3.37	0.16	0.07	0.03	0.01
KATHREIN	80010799	0.5					4.99	2.26	6.18	3.37	0.16	0.07	0.03	0.01
ERICSSON	RRUS-32 B2	1	27.2	12.1	7.0	52.9	2.73	1.67	3.88	2.73	0.08	0.05	0.01	0.01
ERICSSON	RRUS-32 B66A	2	27.2	7.0	12.1	53.0	3.34	5.49	5.46	7.78	0.10	0.17	0.01	0.02
ERICSSON	TME-RRUS 4478 B14	1	16.5	13.4	7.7	59.9	1.84	1.06	2.74	1.80	0.05	0.03	0.01	0.00
ERICSSON	AIR6449 N77	0.5	32.2	15.9	8.1	73.6	2.14	1.15	2.83	1.77	0.06	0.03	0.01	0.00
ERICSSON	AIR6449 N77	0.5					2.14	1.15	2.83	1.77	0.06	0.03	0.01	0.00
ERICSSON	AIR6419 N77G	0.5	32.2	15.9	8.1	73.6	2.14	1.15	2.83	1.77	0.06	0.03	0.01	0.00
ERICSSON	AIR6419 N77G	0.5	32.2	15.9	8.1	73.6	2.14	1.15	2.83	1.77	0.06	0.03	0.01	0.00
CCI ANTENNAS	TPA65R-BU8D	0.5	96.0	21.0	7.8	87.5	7.96	2.99	9.40	4.27	0.26	0.10	0.04	0.02
CCI ANTENNAS	TPA65R-BU8D	0.5					7.96	2.99	9.40	4.27	0.26	0.10	0.04	0.02
ERICSSON	4449 B5/B12	1	15.0	10.4	13.2	73.0	1.30	1.64	2.07	2.49	0.04	0.05	0.01	0.01
ERICSSON	RRUS-32 B30	1	29.9	9.5	13.3	77.0	2.42	3.31	3.60	4.57	0.07	0.10	0.01	0.01
RAYCAP	DC9-48-60-24-PC16-EV	1	31.4	10.2	18.3	26.2	2.74	4.78	3.97	6.21	0.08	0.14	0.01	0.02

Attachment: 1 PC-2022-04 Packet (5951 : AT&T - Special Permit Application)

ASCE 7 Hazards Report

Address:
No Address at This Location

Standard: ASCE/SEI 7-16
Risk Category: II
Soil Class: D - Default (see Section 11.4.3)

Elevation: 1216.91 ft (NAVD 88)
Latitude: 35.558642
Longitude: -97.558022

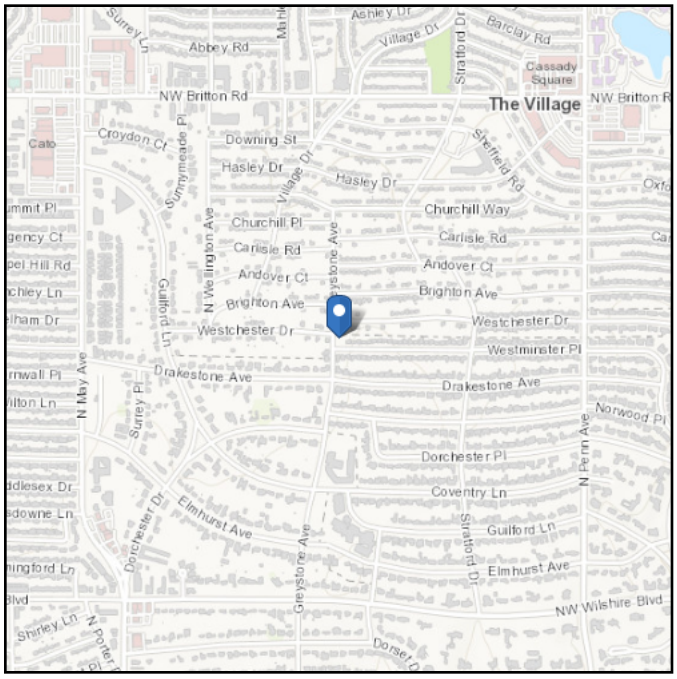

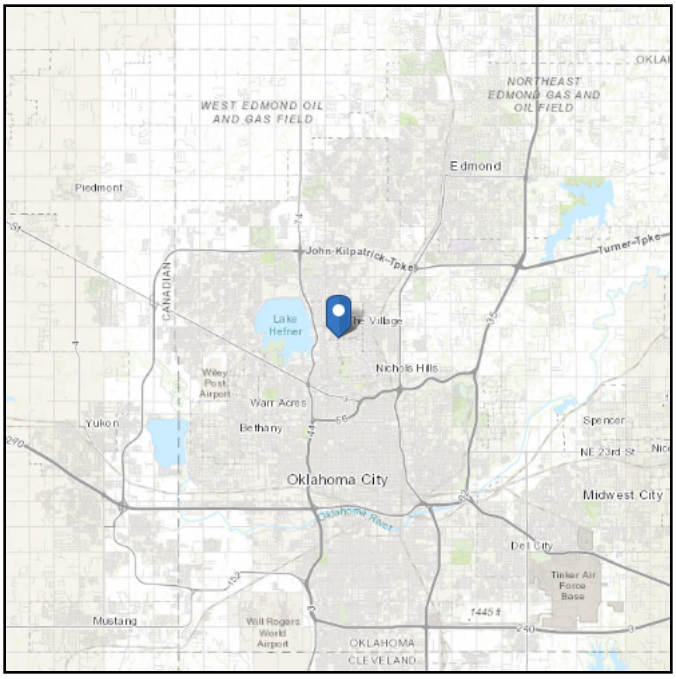

Wind

Results:

Wind Speed	109 Vmph
10-year MRI	75 Vmph
25-year MRI	83 Vmph
50-year MRI	88 Vmph
100-year MRI	94 Vmph

Data Source:	ASCE/SEI 7-16, Fig. 26.5-1B and Figs. CC.2-1–CC.2-4, and Section 26.5.2
Date Accessed:	Wed May 04 2022

Value provided is 3-second gust wind speeds at 33 ft above ground for Exposure C Category, based on linear interpolation between contours. Wind speeds are interpolated in accordance with the 7-16 Standard. Wind speeds correspond to approximately a 7% probability of exceedance in 50 years (annual exceedance probability = 0.00143, MRI = 700 years).

Site is not in a hurricane-prone region as defined in ASCE/SEI 7-16 Section 26.2.

Attachment: 1 PC-2022-04 Packet (5951 : AT&T - Special Permit Application)

Seismic

Site Soil Class: D - Default (see Section 11.4.3)

Results:

S_S :	0.305	S_{D1} :	0.128
S_1 :	0.08	T_L :	12
F_a :	1.556	PGA :	0.183
F_v :	2.4	PGA_M :	0.262
S_{MS} :	0.474	F_{PGA} :	1.434
S_{M1} :	0.192	I_e :	1
S_{DS} :	0.316	C_v :	0.903

Seismic Design Category B

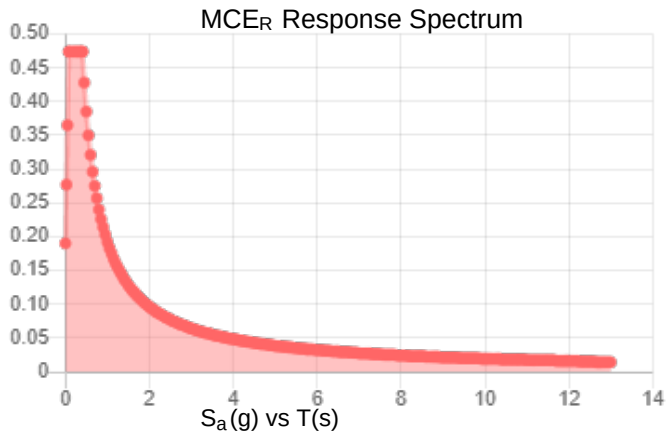

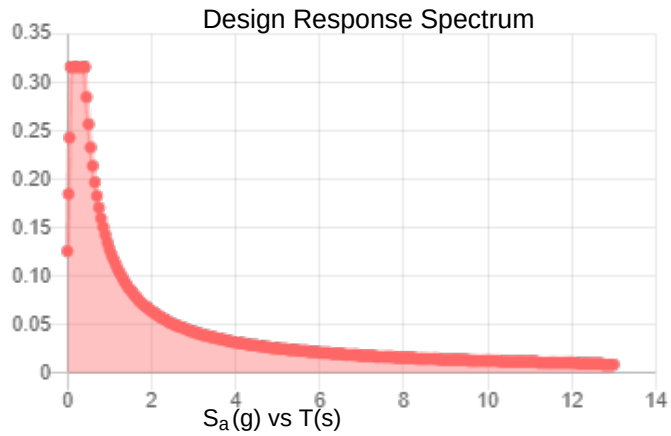

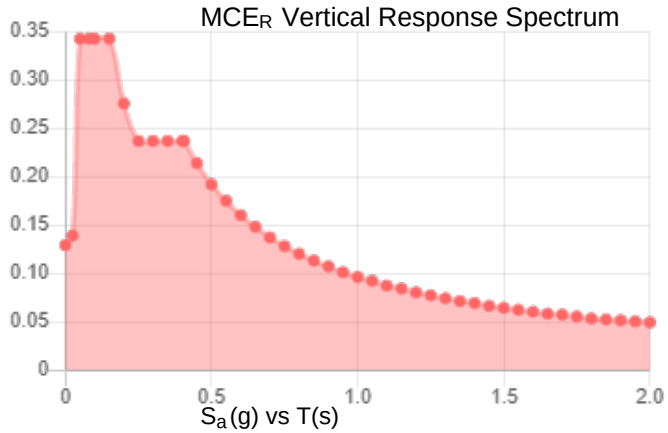

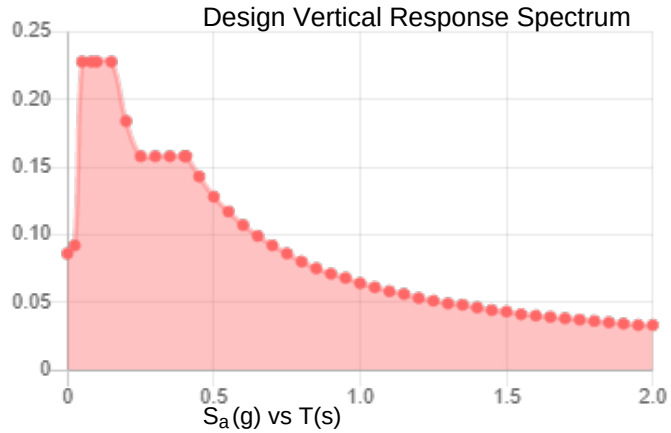

Data Accessed: **Wed May 04 2022**

Date Source:

USGS Seismic Design Maps based on ASCE/SEI 7-16 and ASCE/SEI 7-16 Table 1.5-2. Additional data for site-specific ground motion procedures in accordance with ASCE/SEI 7-16 Ch. 21 are available from USGS.

Attachment: 1 PC-2022-04 Packet (5951 : AT&T - Special Permit Application)

Ice

Results:

Ice Thickness:	1.50 in.
Concurrent Temperature:	5 F
Gust Speed	40 mph
Data Source:	Standard ASCE/SEI 7-16, Figs. 10-2 through 10-8
Date Accessed:	Wed May 04 2022

Ice thicknesses on structures in exposed locations at elevations higher than the surrounding terrain and in valleys and gorges may exceed the mapped values.

Values provided are equivalent radial ice thicknesses due to freezing rain with concurrent 3-second gust speeds, for a 500-year mean recurrence interval, and temperatures concurrent with ice thicknesses due to freezing rain. Thicknesses for ice accretions caused by other sources shall be obtained from local meteorological studies. Ice thicknesses in exposed locations at elevations higher than the surrounding terrain and in valleys and gorges may exceed the mapped values.

The ASCE 7 Hazard Tool is provided for your convenience, for informational purposes only, and is provided “as is” and without warranties of any kind. The location data included herein has been obtained from information developed, produced, and maintained by third party providers; or has been extrapolated from maps incorporated in the ASCE 7 standard. While ASCE has made every effort to use data obtained from reliable sources or methodologies, ASCE does not make any representations or warranties as to the accuracy, completeness, reliability, currency, or quality of any data provided herein. Any third-party links provided by this Tool should not be construed as an endorsement, affiliation, relationship, or sponsorship of such third-party content by or from ASCE.

ASCE does not intend, nor should anyone interpret, the results provided by this Tool to replace the sound judgment of a competent professional, having knowledge and experience in the appropriate field(s) of practice, nor to substitute for the standard of care required of such professionals in interpreting and applying the contents of this Tool or the ASCE 7 standard.

In using this Tool, you expressly assume all risks associated with your use. Under no circumstances shall ASCE or its officers, directors, employees, members, affiliates, or agents be liable to you or any other person for any direct, indirect, special, incidental, or consequential damages arising from or related to your use of, or reliance on, the Tool or any information obtained therein. To the fullest extent permitted by law, you agree to release and hold harmless ASCE from any and all liability of any nature arising out of or resulting from any use of data provided by the ASCE 7 Hazard Tool.

Attachment: 1 PC-2022-04 Packet (5951 : AT&T - Special Permit Application)

February 21, 2022

Hazel Mauro
Nexius Solutions, INC.
1025 South Beltline Rd.,
Coppell, TX 75019
(913) 710-3999

B+T Group
1717 S. Boulder, Suite 300
Tulsa, OK 74119
(918) 587- 4630
btwo@btgrp.com

Subject: **Appurtenance Mount Analysis Report**

Carrier Designation:

Site Number: OKL01652
Site Name: Casady Square
FA Number: 10097837
PACE Number: MROAR040133 MROAR038805 MROAR038810 MROAR038811 MROAR038897

Engineering Firm Designation: **B+T Group Project Number:** 160864.001.01

Site Data: **1849 East Westminster Place, Oklahoma City, OK, 73120, Oklahoma County**
Latitude *35.55864°*, Longitude *-97.55802°*
Water Tank
(3) 12.5 ft. Sector Mount

Dear Mr. Mauro,

B+T Group is pleased to submit this **"Appurtenance Mount Analysis Report"** to determine the structural integrity of the antenna mount on the above-mentioned structure.

The purpose of the analysis is to determine acceptability of the mount's stress level. Based on our analysis we have determined the stress level for the mount under the following load case to be:

Existing + Proposed Equipment Note: See Table 1 for the final loading configuration	**Insufficient Capacity (Failing at 121.9%)**

The analysis has been performed in accordance with the ANSI/TIA-222-G Standard. This analysis utilizes an ultimate 3-second gust wind speed of 115 mph (converted to an equivalent 89 mph nominal 3-second gust wind speed per Section 1609.3.1 for use with ANSI/TIA-222 G) as required by the 2015 International Building Code. Exposure Category C and Risk Category II were used in this analysis.

All the equipment proposed in this report shall be installed in accordance with the drawings for the determined available structural capacity to be effective.

We at *B+T Group* appreciate the opportunity of providing our continuing professional services to you and *Nexius.* If you have any questions or need further assistance on this or any other projects, please give us a call.

Mount structural analysis prepared by: Matthew Williams

Respectfully submitted by: B&T Engineering, Inc.
COA: CA 3590 (PE) Expires: 06/30/2022

LICENSED PROFESSIONAL ENGINEER
BRAD ROBERT MILANOWSKI
17979
OKLAHOMA
2-21-22

Brad R. Milanowski, P.E.

Attachment: 1 PC-2022-04 Packet (5951 : AT&T - Special Permit Application)

TABLE OF CONTENTS

1) INTRODUCTION

2) ANALYSIS CRITERIA
Table 1 – Proposed and Existing Equipment Information
Table 2 – Documents Provided

3) ANALYSIS PROCEDURE
3.1) Analysis Method
3.2) Assumptions

4) ANALYSIS RESULTS
Table 3 – Mount Component Stresses vs. Capacity

5) RECOMMENDATIONS

6) APPENDIX A
RISA-3D Output

Attachment: 1 PC-2022-04 Packet (5951 : AT&T - Special Permit Application)

1) INTRODUCTION

The appurtenance mount consists of sector mount designed by Sabre (Part #C10152269) at 70 ft., attached to water tank at 1849 East Westminster Place, Oklahoma City, OK, 73120, Oklahoma County. The proposed antenna loading information was obtained from Nexius. All information provided to B+T Group was assumed accurate and complete.

2) ANALYSIS CRITERIA

The structural analysis was performed for this mount in accordance with the ANSI/TIA-222-G-2-2005 Structural Standard for Antenna Supporting Structures and Antennas – Addendum 2 using a 3-second gust wind speed of 89 mph with no ice and 40 mph with 0.75 inch escalated ice thickness. Exposure Category C & Topographic Category 1 and Risk Category II were used in this analysis. In addition, the sector mount has been analyzed for various live loading conditions consisting of a 250-lb man live load applied individually at the midpoint and cantilevered ends of horizontal members as well as a 500-pound man live load applied individually at mount pipe locations using a 3-second gust of 30 mph. The mount was analyzed under 30º increments in the wind direction. The analyzed loading is detailed in Table 1.

Table 1 – Proposed and Existing Equipment Information

Loading	RAD Center Elev. (ft.)	Position	Qty.	Manufacturer	Model / Type	Note
Proposed	70	3	3	Ericsson	AIR6449 N77	1
			3	Ericsson	AIR6419 N77G	
		4	3	CCI	TPA65R-BU8D	
			3	Ericsson	4449 B5/B12	2
		-	3	Raycap	DC9-48-60-24-PC16-EV	3
Existing	70	1	6	Kathrein	80010799	4
			3	Ericsson	RRUS-32 B2	
			6	Ericsson	RRUS-32 B66A	
		-	3	Ericsson	4478 B14	
		4	3	Ericsson	RRUS-32 B30	

Note:
(1) Proposed Antenna to be installed on the Mount Pipe.
(2) Proposed Equipment to be installed side by side with RRUS Support, directly behind the Antenna.
(3) Proposed Equipment to be installed on Mount
(4) Existing Equipment installed on the Mount.

Table 2 – Documents Provided

Documents	Remarks	Reference	Source
RFDS	Existing Loading Proposed Loading	Date: 12/27/2021	Nexius
Previous MA	NB+C Engineering Services	Date: 12/15/2017	Nexius

3) ANALYSIS PROCEDURE

3.1) Analysis Method

RISA-3D (Version 19.0.4), a commercially available analysis software package, was used to create a three-dimensional model of the mount and calculate member stresses and deflections for various loading cases. Selected output from the analysis is included in Appendix A.

Attachment: 1 PC-2022-04 Packet (5951 : AT&T - Special Permit Application)

3.2) Assumptions

1. The mount was built in accordance with the manufacturer's specifications.
2. The mount has been maintained in accordance with the manufacturer's specifications and is free of damage.
3. The configuration of antennas and other appurtenances are as specified in Table 1.
4. All mount components have been assumed to be in sufficient condition to carry their full design capacity for the analysis.
5. Mount area and weights are determined from field measurements, standard material properties, and/or manufacturer product data.
   The following assumptions have been included in the analysis of the mount:

Component	Section	Length	Note
Antenna Mount Pipes	2" STD Pipe	8'-0"	In Positions 1,2,3,4,6
	2" STD Pipe	5'-0"	In Positions 5
Unistruts	P1000	-	V-Frames

6. Serviceability with respect to antenna twist, tilt, roll or lateral translation is not checked and is left to the carrier or tower owner to ensure conformance.
7. All prior structural modifications, if any are assumed to be correctly installed and fully effective.
8. All member connections are assumed to have been designed to meet or exceed the load carrying capacity of the connected member unless otherwise specified in this report.
9. The following material grades were assumed (Unless Noted Otherwise):
   a) Connection Bolts : ASTM A325
   b) Steel Pipe : ASTM A53 (GR. 35)
   c) HSS (Round) : ASTM 500 (GR. B-42)
   d) HSS (Rectangular) : ASTM 500 (GR. B-46)
   e) Channel : ASTM A36 (GR. 36)
   f) Steel Solid Rod : ASTM A36 (GR. 36)
   g) Steel Plate : ASTM A36 (GR. 36)
   h) Steel Angle : ASTM A36 (GR. 36)
   i) UNISTRUT : ASTM A570 (GR. 33)

This analysis may be affected if any assumptions are not valid or have been made in error. B+T Group should be notified to determine the effect on the structural integrity of the antenna mounting system.

4) ANALYSIS RESULTS

Table 3 – Mount Component Stresses vs. Capacity

Notes	Component	Elevation (ft.)	% Capacity	Pass / Fail
-	Support Angles	70	87.1	Pass
-	Connection Angles	70	38.2	Pass
-	Verticals	70	27.5	Pass
-	Diagonals	70	19.9	Pass
-	Face Horizontals	70	121.9	Fail
-	Tieback	70	13.7	Pass
-	Vertical Support Pipe	70	93.7	Pass
-	Unistruts	70	34.1	Pass

Attachment: 1 PC-2022-04 Packet (5951 : AT&T - Special Permit Application)

5) RECOMMENDATIONS

The sector mount does not have sufficient capacity to carry the existing and proposed loads. The mount will need to be reinforced to bring the mount into compliance with the ANSI/TIA-222-H standard. The following members have exceeded their load carrying capacity for the existing and proposed loading (Refer to the RISA output for the specific members):

a) Face Horizontals

Recent photos will be required to design the necessary modifications.

Attachment: 1 PC-2022-04 Packet (5951 : AT&T - Special Permit Application)

ASCE 7 Hazards Report

Address:
No Address at This Location

Standard: ASCE/SEI 7-10
Risk Category: II
Soil Class: D - Stiff Soil

Elevation: 1216.91 ft (NAVD 88)
Latitude: 35.558642
Longitude: -97.558022

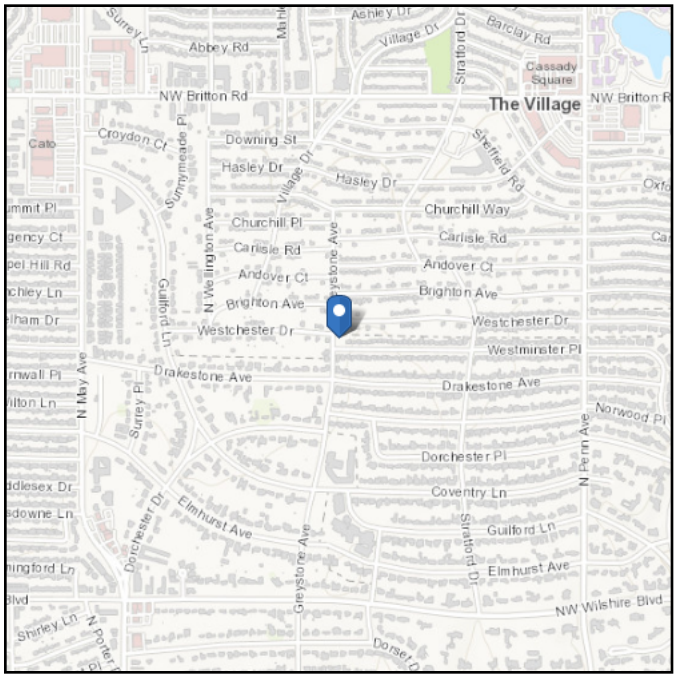

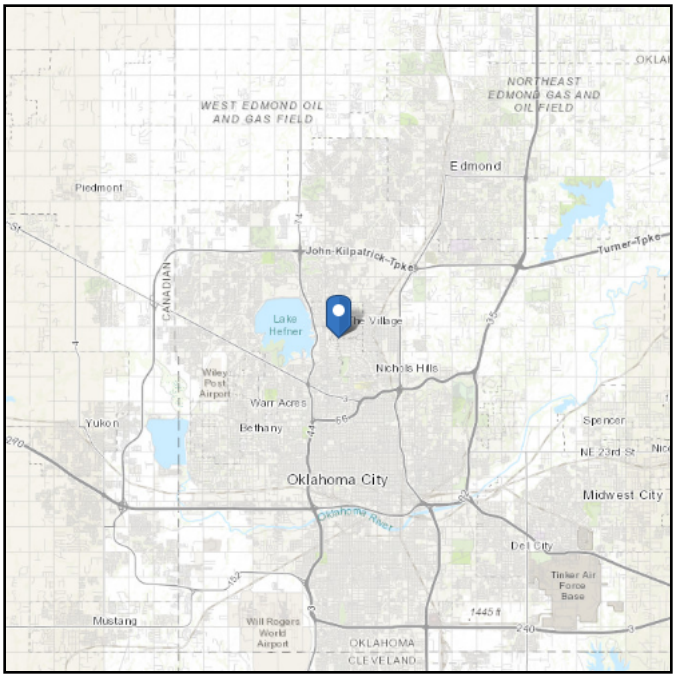

Wind

Results:

Wind Speed	115 Vmph
10-year MRI	76 Vmph
25-year MRI	84 Vmph
50-year MRI	90 Vmph
100-year MRI	96 Vmph

Data Source: ASCE/SEI 7-10, Fig. 26.5-1A and Figs. CC-1–CC-4, and Section 26.5.2, incorporating errata of March 12, 2014

Date Accessed: Sat Feb 19 2022

Value provided is 3-second gust wind speeds at 33 ft above ground for Exposure C Category, based on linear interpolation between contours. Wind speeds are interpolated in accordance with the 7-10 Standard. Wind speeds correspond to approximately a 7% probability of exceedance in 50 years (annual exceedance probability = 0.00143, MRI = 700 years).

Site is not in a hurricane-prone region as defined in ASCE/SEI 7-10 Section 26.2.

Attachment: 1 PC-2022-04 Packet (5951 : AT&T - Special Permit Application)

Seismic

Site Soil Class: D - Stiff Soil

Results:

S_S :	0.262	S_{DS} :	0.277
S_1 :	0.077	S_{D1} :	0.123
F_a :	1.591	T_L :	12
F_v :	2.4	PGA :	0.154
S_{MS} :	0.416	PGA_M :	0.23
S_{M1} :	0.184	F_{PGA} :	1.491
		I_e :	1

Seismic Design Category B

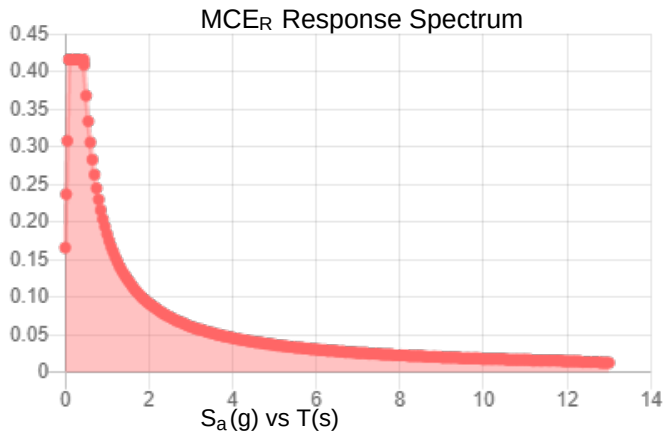

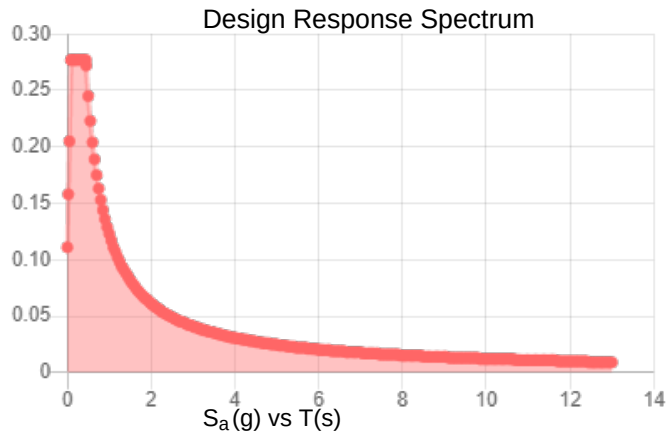

Data Accessed: **Sat Feb 19 2022**

Date Source:

USGS Seismic Design Maps based on ASCE/SEI 7-10, incorporating Supplement 1 and errata of March 31, 2013, and ASCE/SEI 7-10 Table 1.5-2. Additional data for site-specific ground motion procedures in accordance with ASCE/SEI 7-10 Ch. 21 are available from USGS.

Attachment: 1 PC-2022-04 Packet (5951 : AT&T - Special Permit Application)

Ice

Results:

Ice Thickness:	0.75 in.
Concurrent Temperature:	5 F
Gust Speed	40 mph
Data Source:	Standard ASCE/SEI 7-10, Figs. 10-2 through 10-8
Date Accessed:	Sat Feb 19 2022

Ice thicknesses on structures in exposed locations at elevations higher than the surrounding terrain and in valleys and gorges may exceed the mapped values.

Values provided are equivalent radial ice thicknesses due to freezing rain with concurrent 3-second gust speeds, for a 50-year mean recurrence interval, and temperatures concurrent with ice thicknesses due to freezing rain. Thicknesses for ice accretions caused by other sources shall be obtained from local meteorological studies. Ice thicknesses in exposed locations at elevations higher than the surrounding terrain and in valleys and gorges may exceed the mapped values.

The ASCE 7 Hazard Tool is provided for your convenience, for informational purposes only, and is provided “as is” and without warranties of any kind. The location data included herein has been obtained from information developed, produced, and maintained by third party providers; or has been extrapolated from maps incorporated in the ASCE 7 standard. While ASCE has made every effort to use data obtained from reliable sources or methodologies, ASCE does not make any representations or warranties as to the accuracy, completeness, reliability, currency, or quality of any data provided herein. Any third-party links provided by this Tool should not be construed as an endorsement, affiliation, relationship, or sponsorship of such third-party content by or from ASCE.

ASCE does not intend, nor should anyone interpret, the results provided by this Tool to replace the sound judgment of a competent professional, having knowledge and experience in the appropriate field(s) of practice, nor to substitute for the standard of care required of such professionals in interpreting and applying the contents of this Tool or the ASCE 7 standard.

In using this Tool, you expressly assume all risks associated with your use. Under no circumstances shall ASCE or its officers, directors, employees, members, affiliates, or agents be liable to you or any other person for any direct, indirect, special, incidental, or consequential damages arising from or related to your use of, or reliance on, the Tool or any information obtained therein. To the fullest extent permitted by law, you agree to release and hold harmless ASCE from any and all liability of any nature arising out of or resulting from any use of data provided by the ASCE 7 Hazard Tool.

Attachment: 1 PC-2022-04 Packet (5951 : AT&T - Special Permit Application)

PROJECT	**160864.001.01 - Casady Square, OK**				**KSC**
SUBJECT	**Sector- Mount Analysis**				
DATE	**02/21/22**	PAGE	1	OF	5

B+T Group
1717 S. Boulder, Suite 300
Tulsa, OK 74119
(918) 587-4630

INPUT

[REF: ANSI/TIA-222-G2005]

Tower Type		:	WT		
Tower Height		:	129	ft	
Mount Elevation		:	70	ft	
Antenna Elevation		:	70	ft	
Crest Height		:	0	ft	
Structure Class		:	II		[Table 2-1]
Exposure Category		:	C		[Sec. 2.6.5]
Topography Category		:	1		[Sec. 2.6.6.2]
Wind Velocity	V	:	89	mph	[Annex B]
Ice wind Velocity	V_i	:	40	mph	[Annex B]
Service Velocity	V_s	:	30	mph	[Annex B]
Base Ice thickness	t_i	:	0.75	in	[Annex B]

ANTENNAS

	Manufacturer	Model	Height (in)	Front Width (in)	Side Width (in)	Weight (lbs)	Shape	Quantity	Location (%)
Mount Pipe **31**									
	KATHREIN	80010799	106.00	14.80	6.70	108.00	Flat	1	5
	KATHREIN	80010799	106.00	14.80	6.70	108.00	Flat	1	95
	ERICSSON	RRUS-32 B2	27.20	7.00	12.05	52.90	Flat	1	50
	ERICSSON	RRUS-32 B66A	27.20	12.10	7.00	53.00	Flat	2	25
Mount Pipe **52**									
	ERICSSON	4478 B14	16.50	13.40	7.70	59.90	Flat	1	50
Mount Pipe **30**									
	ERICSSON	AIR6449 N77	32.24	15.90	8.10	73.60	Flat	0.5	5
	ERICSSON	AIR6449 N77	32.24	15.90	8.10	73.60	Flat	0.5	35
	ERICSSON	AIR6419 N77G	32.24	15.90	8.10	73.60	Flat	0.5	60
	ERICSSON	AIR6419 N77G	32.24	15.90	8.10	73.60	Flat	0.5	95
Mount Pipe **27**									
	CCI	TPA65R-BU8D	96.00	21.00	7.80	82.50	Flat	0.5	5
	CCI	TPA65R-BU8D	96.00	21.00	7.80	82.50	Flat	0.5	95
	ERICSSON	4449 B5/B12	14.96	10.43	13.19	73.00	Flat	1	20
	ERICSSON	RRUS-32 B30	29.90	9.50	13.30	77.00	Flat	1	20
Mount Pipe **51**									
	RAYCAP	DC9-48-60-24-PC16-EV	31.40	10.24	18.28	26.20	Flat	1	50
Mount Pipe									

Attachment: 1 PC-2022-04 Packet (5951 : AT&T - Special Permit Application)

APPENDIX A

(RISA-3D Output)

Attachment: 1 PC-2022-04 Packet (5951 : AT&T - Special Permit Application)

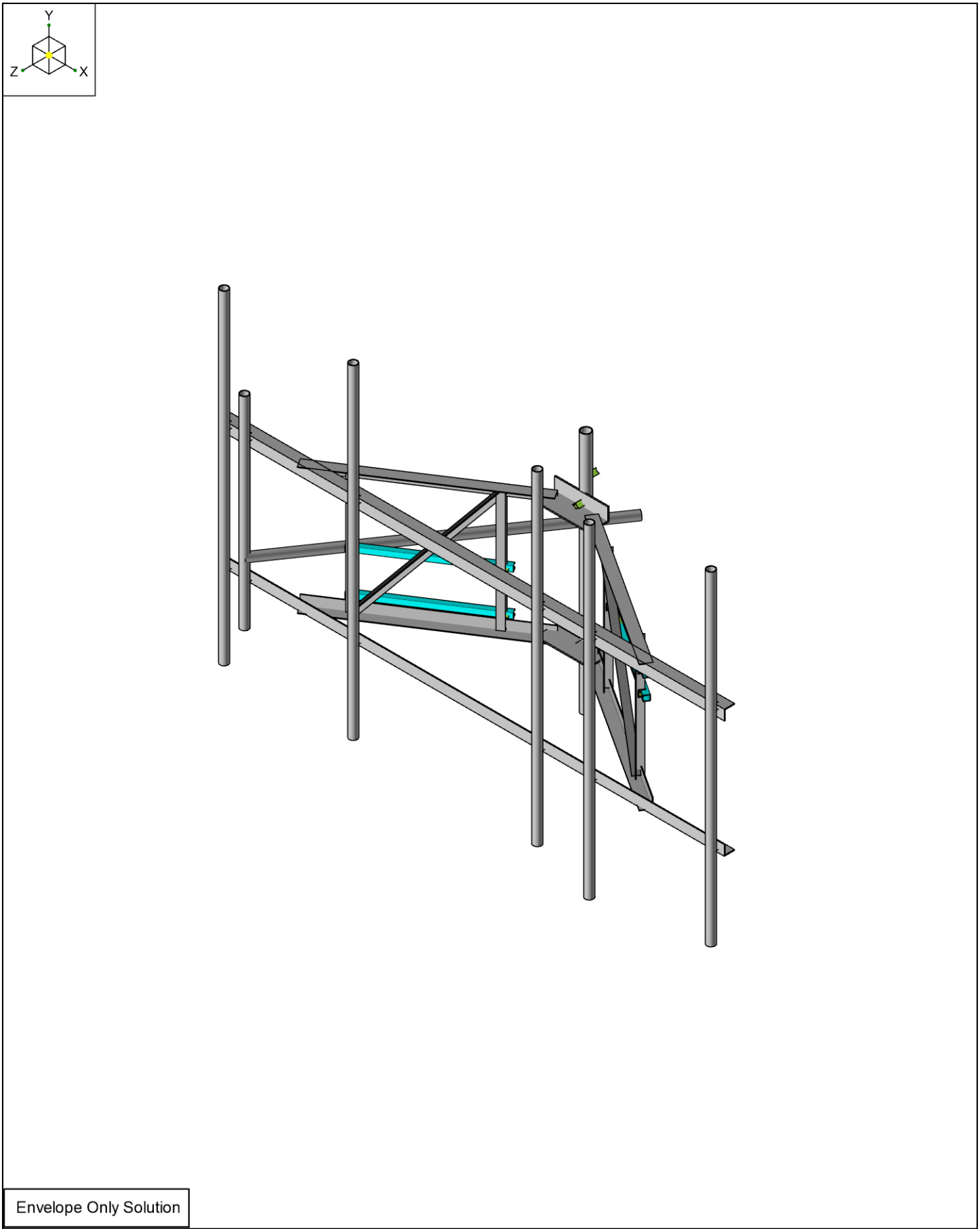

Envelope Only Solution

B+T Group	OKL01652 - CASADY SQUARE	AK1
AK		Feb 19, 2022
160864.001.01		160864_001_01_CASADY SQUA…

Attachment: 1 PC-2022-04 Packet (5951 : AT&T - Special Permit Application)

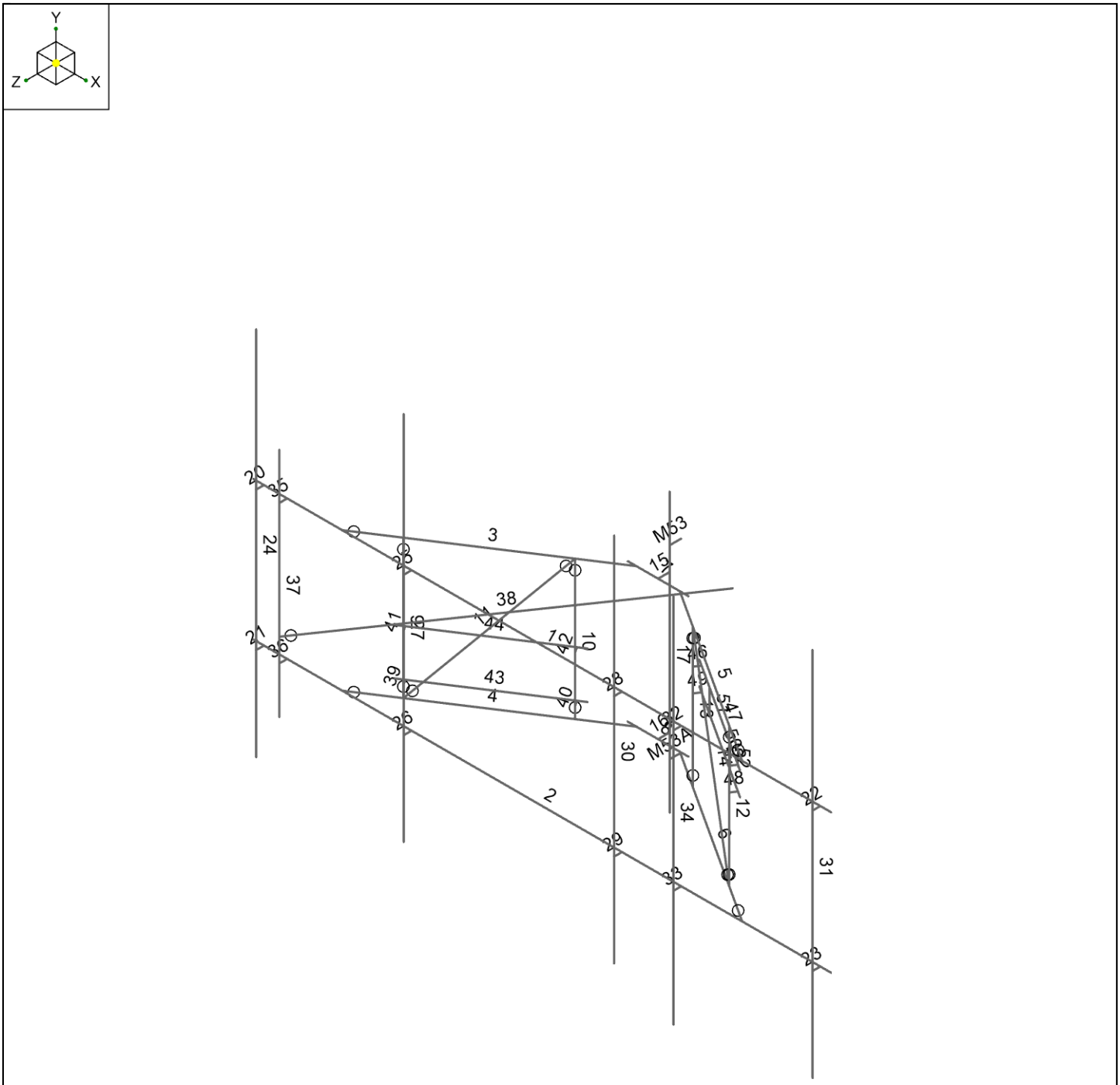

Envelope Only Solution

B+T Group	OKL01652 - CASADY SQUARE	AK2
AK		Feb 19, 2022
160864.001.01		160864_001_01_CASADY SQUA…

Attachment: 1 PC-2022-04 Packet (5951 : AT&T - Special Permit Application)

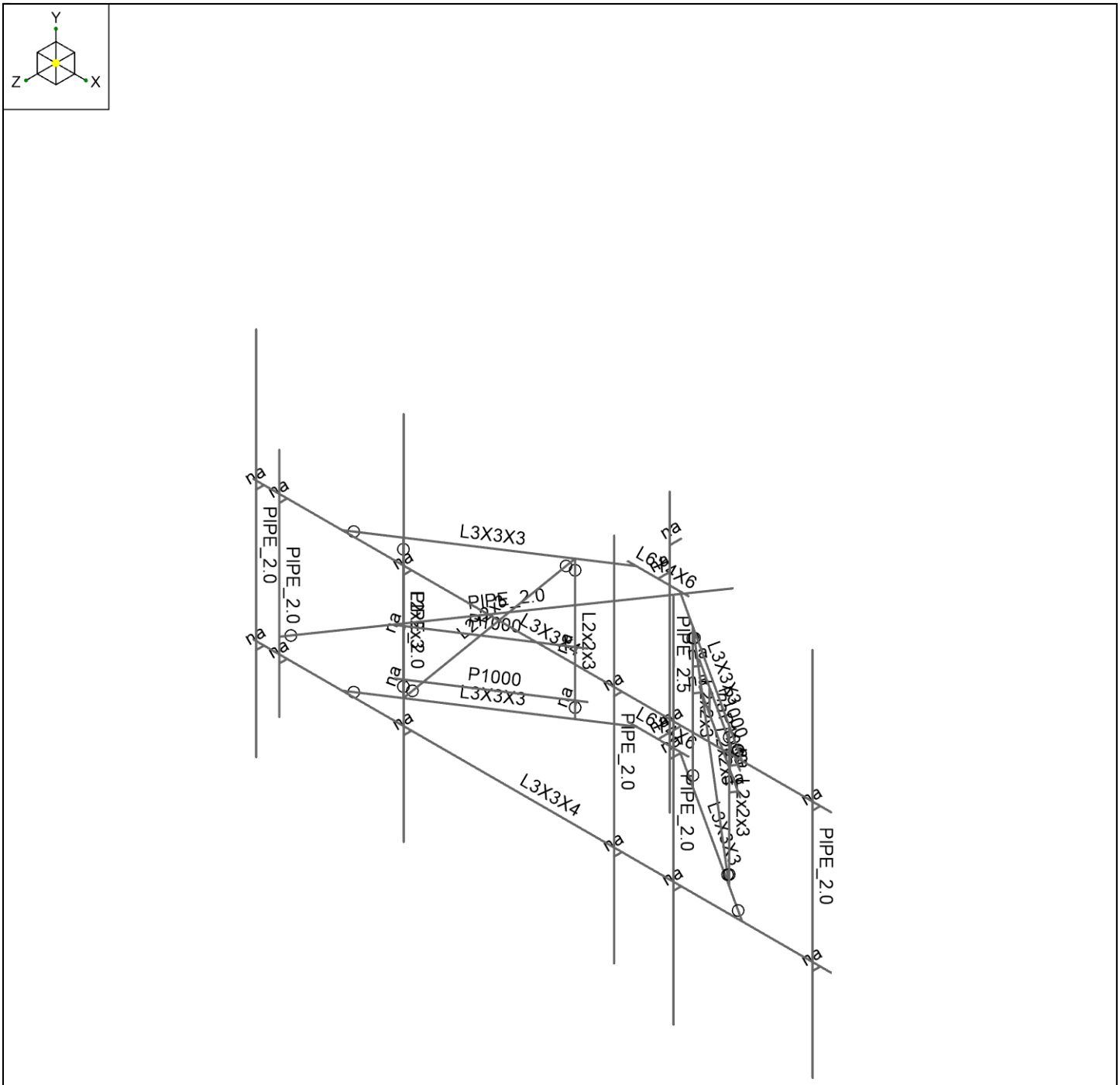

Envelope Only Solution

B+T Group	OKL01652 - CASADY SQUARE	AK3
AK		Feb 19, 2022
160864.001.01		160864_001_01_CASADY SQUA…

Attachment: 1 PC-2022-04 Packet (5951 : AT&T - Special Permit Application)

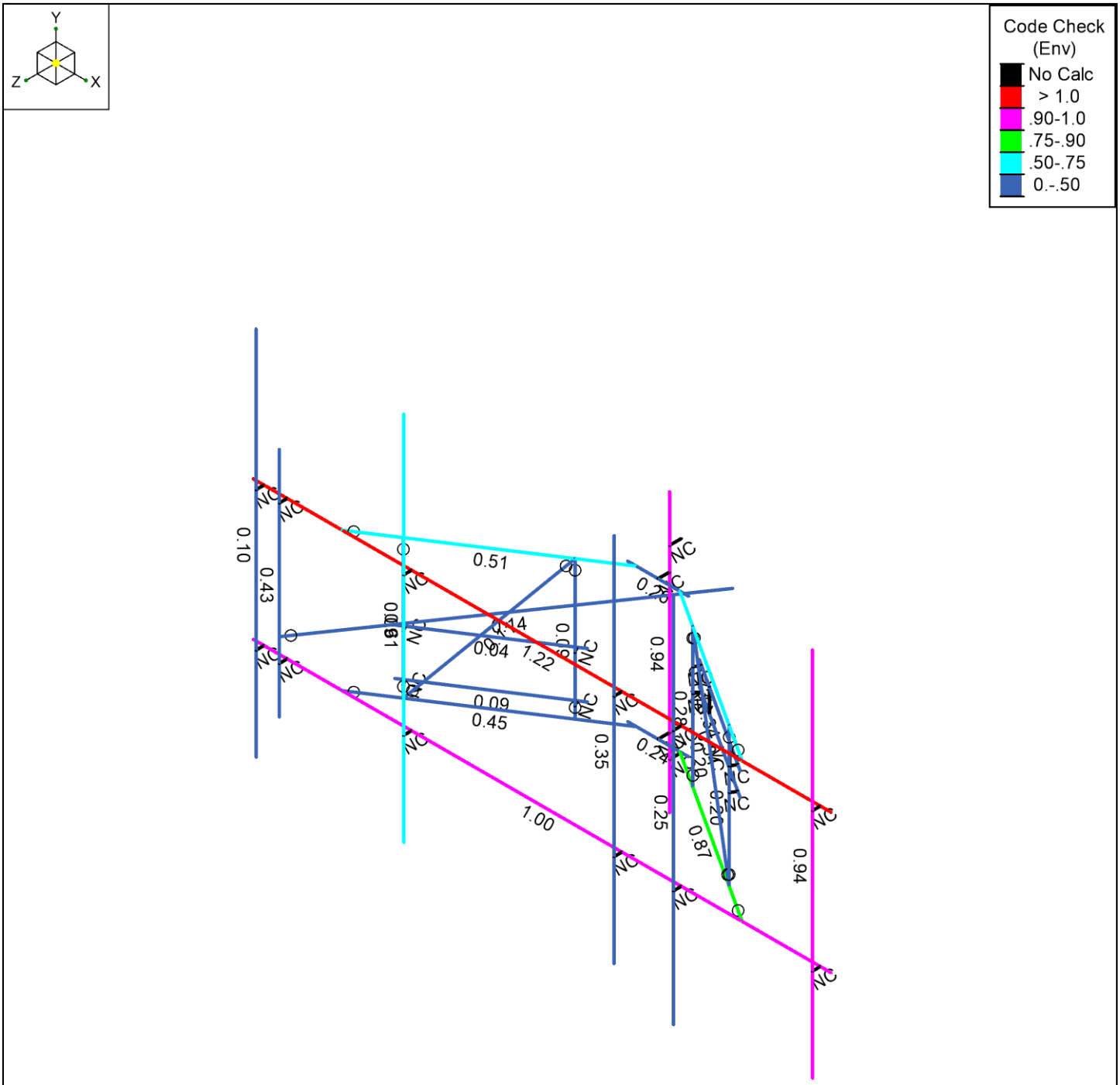

Member Code Checks Displayed (Enveloped)
Envelope Only Solution

B+T Group	OKL01652 - CASADY SQUARE	AK4
AK		Feb 19, 2022
160864.001.01		160864_001_01_CASADY SQUA…

Attachment: 1 PC-2022-04 Packet (5951 : AT&T - Special Permit Application)

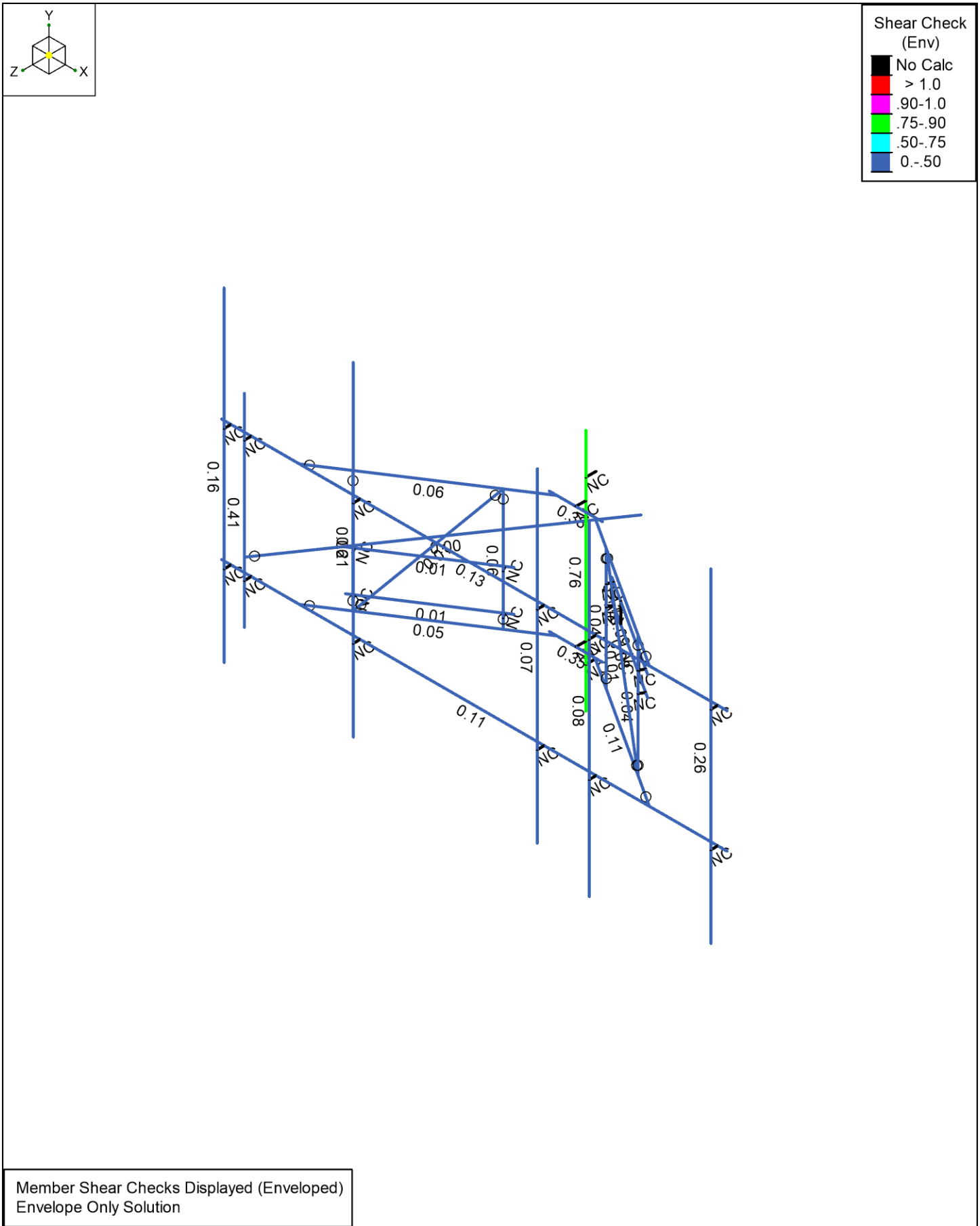

Member Shear Checks Displayed (Enveloped)
Envelope Only Solution

B+T Group	OKL01652 - CASADY SQUARE	AK5
AK		Feb 19, 2022
160864.001.01		160864_001_01_CASADY SQUA…

Attachment: 1 PC-2022-04 Packet (5951 : AT&T - Special Permit Application)

Node Coordinates

	Label	X [ft]	Y [ft]	Z [ft]	Detach From Diaphragm
1	1	0	-3	2.244792	
2	2	0	0	2.244792	
3	3	4.3125	0	4.744792	
4	4	-4.3125	0	4.744792	
5	5	4.3125	-3	4.744792	
6	6	-4.3125	-3	4.744792	
7	7	-6.229167	-3	4.744792	
8	8	-6.229167	0	4.744792	
9	9	6.229167	-3	4.744792	
10	10	6.229167	0	4.744792	
11	11	-0.65625	-3	2.244792	
12	12	-0.65625	0	2.244792	
13	13	0.65625	-3	2.244792	
14	14	0.65625	0	2.244792	
15	15	-0.46875	-3	2.244792	
16	16	-0.46875	0	2.244792	
17	17	0.46875	-3	2.244792	
18	18	0.46875	0	2.244792	
19	19	-3.513507	0	4.225122	
20	20	-3.513507	-3	4.225122	
21	21	-1.26934	0	2.765501	
22	22	-1.26934	-3	2.765501	
23	23	3.513507	0	4.225122	
24	24	3.513507	-3	4.225122	
25	25	1.26934	0	2.765501	
26	26	1.26934	-3	2.765501	
27	27	0	-3	1.994792	
28	28	0	0	1.994792	
29	29	0	0	0.	
30	30	-0.	1.5	1.994792	
31	31	-0.	-4.5	1.994792	
32	32	-0.	-3.25	1.994792	
33	33	-0.	-3.25	0.75	
34	34	-5.99997	0	4.744792	
35	35	-5.99997	0	4.914158	
36	36	-5.99997	-3	4.744792	
37	37	-5.99997	-3	4.914158	
38	38	5.99997	0	4.744792	
39	39	5.99997	0	4.914158	
40	40	5.99997	-3	4.744792	
41	41	5.99997	-3	4.914158	
42	42	-5.99997	3	4.914158	
43	43	-5.99997	-5	4.914158	
44	44	-2.8167	0	4.744792	
45	45	-2.8167	0	4.914158	
46	46	-2.8167	-3	4.744792	
47	47	-2.8167	-3	4.914158	
48	48	-2.8167	3	4.914158	
49	49	-2.8167	-5	4.914158	
50	50	1.720804	0	4.744792	
51	51	1.720804	0	4.914158	
52	52	1.720804	-3	4.744792	
53	53	1.720804	-3	4.914158	
54	54	1.720804	3	4.914158	
55	55	1.720804	-5	4.914158	
56	56	6.00003	3	4.914158	
57	57	6.00003	-5	4.914158	
58	58	3.00003	0	4.744792	

Attachment: 1 PC-2022-04 Packet (5951 : AT&T - Special Permit Application)

Node Coordinates (Continued)

	Label	X [ft]	Y [ft]	Z [ft]	Detach From Diaphragm
59	59	3.00003	0	4.914158	
60	60	3.00003	-3	4.744792	
61	61	3.00003	-3	4.914158	
62	62	3.00003	2.5	4.914158	
63	63	3.00003	-5.5	4.914158	
64	64	-5.5	0	4.744792	
65	65	-5.5	0	4.914158	
66	66	-5.5	-3	4.744792	
67	67	-5.5	1	4.914158	
68	68	-5.5	-4	4.914158	
69	69	-5.5	-3	4.914158	
70	70	-5.5	-2.5	4.914158	
71	71	-3.587664	-2.749995	4.111111	
72	72	-3.513507	-2.749995	4.225122	
73	73	-1.343495	-2.749995	2.651489	
74	74	-1.26934	-2.749995	2.765501	
75	75	-3.587664	-1.749995	4.111111	
76	76	-3.513507	-1.749995	4.225122	
77	77	-1.343494	-1.749995	2.651489	
78	78	-1.26934	-1.749995	2.765501	
79	79	-3.723011	-2.749995	4.199142	
80	80	-1.208147	-2.749995	2.563458	
81	81	-3.723011	-1.749995	4.199142	
82	82	-1.208147	-1.749995	2.563458	
83	83	3.587663	-0.75	4.111111	
84	84	3.513507	-0.75	4.225122	
85	85	1.343494	-0.75	2.651489	
86	86	1.26934	-0.75	2.765501	
87	87	3.72301	-0.75	4.199142	
88	88	1.208147	-0.75	2.563458	
89	89	3.587663	-1.25	4.111111	
90	90	3.513507	-1.25	4.225122	
91	91	1.343494	-1.25	2.651489	
92	92	1.26934	-1.25	2.765501	
93	93	3.723011	-1.25	4.199142	
94	94	1.208147	-1.25	2.563458	
95	95	1.515545	0	-0.875	
96	96	-1.515545	0	-0.875	
97	97	-1.515545	-2.5	-0.875	
98	98	3.094295	-0.75	3.790221	
99	99	3.094295	-1.25	3.790221	
100	100	1.836863	-0.75	2.972379	
101	101	1.836863	-1.25	2.972379	
102	102	0	0.5	1.994792	
103	103	-0.	0.5	1.75	
104	104	-0.	-3.5	1.994792	
105	105	-0.	-3.5	1.75	

Node Boundary Conditions

	Node Label	X [k/in]	Y [k/in]	Z [k/in]	X Rot [k-ft/rad]	Y Rot [k-ft/rad]	Z Rot [k-ft/rad]
1	2						
2	1						
3	27						
4	28						
5	97	Reaction	Reaction	Reaction			
6	102						
7	103	Reaction	Reaction	Reaction	Reaction	Reaction	Reaction
8	105	Reaction	Reaction	Reaction	Reaction	Reaction	Reaction

Attachment: 1 PC-2022-04 Packet (5951 : AT&T - Special Permit Application)

Hot Rolled Steel Properties

	Label	E [ksi]	G [ksi]	Nu	Therm. Coeff. [1e⁵°F⁻¹]	Density [k/ft³]	Yield [ksi]	Ry	Fu [ksi]	Rt
1	A36 Gr.36	29000	11154	0.3	0.65	0.49	36	1.5	58	1.2
2	A572 Gr.50	29000	11154	0.3	0.65	0.49	50	1.1	58	1.2
3	A992	29000	11154	0.3	0.65	0.49	50	1.1	58	1.2
4	A500 Gr.42	29000	11154	0.3	0.65	0.49	42	1.3	58	1.1
5	A500 Gr.46	29000	11154	0.3	0.65	0.49	46	1.2	58	1.1
6	A53 Gr.B	29000	11154	0.3	0.65	0.49	35	1.5	58	1.2
7	A500 Gr.B RND	29000	11154	0.3	0.65	0.527	42	1.4	58	1.3
8	A500 Gr.B Rect	29000	11154	0.3	0.65	0.527	46	1.4	58	1.3
9	A1085	29000	11154	0.3	0.65	0.49	50	1.4	65	1.3

Cold Formed Steel Properties

	Label	E [ksi]	G [ksi]	Nu	Therm. Coeff. [1e⁵°F⁻¹]	Density [k/ft³]	Yield [ksi]	Fu [ksi]
1	A570_33	29500	11346	0.3	0.65	0.49	33	52
2	A607_C1_55	29500	11346	0.3	0.65	0.49	55	70
3	A653 SS Gr33	29500	11346	0.3	0.65	0.49	33	45
4	A653 SS Gr50/1	29500	11346	0.3	0.65	0.49	50	65

Hot Rolled Steel Section Sets

	Label	Shape	Type	Design List	Material	Design Rule	Area [in²]	Iyy [in⁴]	Izz [in⁴]	J [in⁴]
1	F1-H1	L3X3X3	Beam	Single Angle	A572 Gr.50	Typical	1.09	0.948	0.948	0.014
2	F1-H2	L6X4X6	Beam	Single Angle	A36 Gr.36	Typical	3.61	4.86	13.4	0.177
3	F1-V1	L2x2x3	Column	Single Angle	A572 Gr.50	Typical	0.722	0.271	0.271	0.009
4	F1-D1	L2x2x3	VBrace	Single Angle	A572 Gr.50	Typical	0.722	0.271	0.271	0.009
5	MF-H1	L3X3X4	Beam	Single Angle	A572 Gr.50	Typical	1.44	1.23	1.23	0.031
6	MF-P1	PIPE_2.0	Column	Pipe	A53 Gr.B	Typical	1.02	0.627	0.627	1.25
7	Tieback	PIPE_2.0	Beam	Pipe	A53 Gr.B	Typical	1.02	0.627	0.627	1.25
8	FV-1	PIPE_2.5	Column	Pipe	A53 Gr.B	Typical	1.61	1.45	1.45	2.89

Cold Formed Steel Section Sets

	Label	Shape	Type	Design List	Material	Design Rule	Area [in²]	Iyy [in⁴]	Izz [in⁴]	J [in⁴]
1	CF1A	P1000	Beam	CS	A570_33	Typical	0.517	0.165	0.222	0.002

Member Primary Data

	Label	I Node	J Node	Rotate(deg)	Section/Shape	Type	Design List	Material	Design Rule
1	1	8	10	180	MF-H1	Beam	Single Angle	A572 Gr.50	Typical
2	2	7	9	270	MF-H1	Beam	Single Angle	A572 Gr.50	Typical
3	3	4	16	90	F1-H1	Beam	Single Angle	A572 Gr.50	Typical
4	4	6	15		F1-H1	Beam	Single Angle	A572 Gr.50	Typical
5	5	3	18	180	F1-H1	Beam	Single Angle	A572 Gr.50	Typical
6	6	5	17	270	F1-H1	Beam	Single Angle	A572 Gr.50	Typical
7	7	14	12	270	F1-H2	Beam	Single Angle	A36 Gr.36	Typical
8	8	11	13	90	F1-H2	Beam	Single Angle	A36 Gr.36	Typical
9	9	19	20	325	F1-V1	Column	Single Angle	A572 Gr.50	Typical
10	10	21	22	325	F1-V1	Column	Single Angle	A572 Gr.50	Typical
11	11	21	20	180	F1-D1	VBrace	Single Angle	A572 Gr.50	Typical
12	12	23	24	135	F1-V1	Column	Single Angle	A572 Gr.50	Typical
13	13	25	26	135	F1-V1	Column	Single Angle	A572 Gr.50	Typical
14	14	25	24	90	F1-D1	VBrace	Single Angle	A572 Gr.50	Typical
15	15	2	28		RIGID	None	None	RIGID	Typical
16	16	1	27		RIGID	None	None	RIGID	Typical
17	17	30	31		FV-1	Column	Pipe	A53 Gr.B	Typical
18	20	34	35		RIGID	None	None	RIGID	Typical
19	21	36	37		RIGID	None	None	RIGID	Typical
20	22	38	39		RIGID	None	None	RIGID	Typical
21	23	40	41		RIGID	None	None	RIGID	Typical
22	24	42	43		MF-P1	Column	Pipe	A53 Gr.B	Typical

Attachment: 1 PC-2022-04 Packet (5951 : AT&T - Special Permit Application)

Member Primary Data (Continued)

	Label	I Node	J Node	Rotate(deg)	Section/Shape	Type	Design List	Material	Design Rule
23	25	44	45		RIGID	None	None	RIGID	Typical
24	26	46	47		RIGID	None	None	RIGID	Typical
25	27	48	49		MF-P1	Column	Pipe	A53 Gr.B	Typical
26	28	50	51		RIGID	None	None	RIGID	Typical
27	29	52	53		RIGID	None	None	RIGID	Typical
28	30	54	55		MF-P1	Column	Pipe	A53 Gr.B	Typical
29	31	56	57		MF-P1	Column	Pipe	A53 Gr.B	Typical
30	32	58	59		RIGID	None	None	RIGID	Typical
31	33	60	61		RIGID	None	None	RIGID	Typical
32	34	62	63		MF-P1	Column	Pipe	A53 Gr.B	Typical
33	35	64	65		RIGID	None	None	RIGID	Typical
34	36	66	69		RIGID	None	None	RIGID	Typical
35	37	67	68		MF-P1	Column	Pipe	A53 Gr.B	Typical
36	38	70	97		Tieback	Beam	Pipe	A53 Gr.B	Typical
37	39	71	72		RIGID	None	None	RIGID	Typical
38	40	73	74		RIGID	None	None	RIGID	Typical
39	41	75	76		RIGID	None	None	RIGID	Typical
40	42	77	78		RIGID	None	None	RIGID	Typical
41	43	79	80	180	CF1A	Beam	CS	A570_33	Typical
42	44	81	82	180	CF1A	Beam	CS	A570_33	Typical
43	45	83	84		RIGID	None	None	RIGID	Typical
44	46	85	86		RIGID	None	None	RIGID	Typical
45	47	87	88	180	CF1A	Beam	CS	A570_33	Typical
46	48	89	90		RIGID	None	None	RIGID	Typical
47	49	91	92		RIGID	None	None	RIGID	Typical
48	50	93	94	180	CF1A	Beam	CS	A570_33	Typical
49	51	100	101		RIGID	None	None	RIGID	Typical
50	52	98	99		RIGID	None	None	RIGID	Typical
51	M53	102	103		RIGID	None	None	RIGID	Typical
52	M53A	104	105		RIGID	None	None	RIGID	Typical

Member Advanced Data

	Label	I Release	J Release	Physical	Deflection Ratio Options	Seismic DR
1	1			Yes		None
2	2			Yes		None
3	3	BenPIN		Yes		None
4	4	BenPIN		Yes		None
5	5	BenPIN		Yes		None
6	6	BenPIN		Yes		None
7	7			Yes		None
8	8			Yes		None
9	9	BenPIN	BenPIN	Yes	** NA **	None
10	10	BenPIN	BenPIN	Yes	** NA **	None
11	11	BenPIN	BenPIN	Yes	** NA **	None
12	12	BenPIN	BenPIN	Yes	** NA **	None
13	13	BenPIN	BenPIN	Yes	** NA **	None
14	14	BenPIN	BenPIN	Yes	** NA **	None
15	15			Yes	** NA **	None
16	16			Yes	** NA **	None
17	17			Yes	** NA **	None
18	20			Yes	** NA **	None
19	21			Yes	** NA **	None
20	22			Yes	** NA **	None
21	23			Yes	** NA **	None
22	24			Yes	** NA **	None
23	25			Yes	** NA **	None
24	26			Yes	** NA **	None
25	27			Yes	** NA **	None

Attachment: 1 PC-2022-04 Packet (5951 : AT&T - Special Permit Application)

Member Advanced Data (Continued)

	Label	I Release	J Release	Physical	Deflection Ratio Options	Seismic DR
26	28			Yes	** NA **	None
27	29			Yes	** NA **	None
28	30			Yes	** NA **	None
29	31			Yes	** NA **	None
30	32			Yes	** NA **	None
31	33			Yes	** NA **	None
32	34			Yes	** NA **	None
33	35			Yes	** NA **	None
34	36			Yes	** NA **	None
35	37			Yes	** NA **	None
36	38	BenPIN		Yes		None
37	39			Yes	** NA **	None
38	40			Yes	** NA **	None
39	41			Yes	** NA **	None
40	42			Yes	** NA **	None
41	43			Yes		None
42	44			Yes		None
43	45			Yes	** NA **	None
44	46			Yes	** NA **	None
45	47			Yes		None
46	48			Yes	** NA **	None
47	49			Yes	** NA **	None
48	50			Yes		None
49	51			Yes	** NA **	None
50	52			Yes	** NA **	None
51	M53			Yes	** NA **	None
52	M53A			Yes	** NA **	None

Hot Rolled Steel Design Parameters

	Label	Shape	Length [ft]	Lcomp top [ft]	Function
1	1	MF-H1	12.458		Lateral
2	2	MF-H1	12.458		Lateral
3	3	F1-H1	4.585		Lateral
4	4	F1-H1	4.585		Lateral
5	5	F1-H1	4.585		Lateral
6	6	F1-H1	4.585		Lateral
7	7	F1-H2	1.313		Lateral
8	8	F1-H2	1.313		Lateral
9	9	F1-V1	3		Lateral
10	10	F1-V1	3		Lateral
11	11	F1-D1	4.021		Lateral
12	12	F1-V1	3		Lateral
13	13	F1-V1	3		Lateral
14	14	F1-D1	4.021		Lateral
15	17	FV-1	6	Lbyy	Lateral
16	24	MF-P1	8	Lbyy	Lateral
17	27	MF-P1	8	Lbyy	Lateral
18	30	MF-P1	8	Lbyy	Lateral
19	31	MF-P1	8	Lbyy	Lateral
20	34	MF-P1	8	Lbyy	Lateral
21	37	MF-P1	5	Lbyy	Lateral
22	38	Tieback	7.028	Lbyy	Lateral

Cold Formed Steel Design Parameters

	Label	Shape	Length [ft]	Lcomp top [ft]	y sway	z sway
1	43	CF1A	3	Lbyy		
2	44	CF1A	3	Lbyy		

Attachment: 1 PC-2022-04 Packet (5951 : AT&T - Special Permit Application)

Cold Formed Steel Design Parameters (Continued)

	Label	Shape	Length [ft]	Lcomp top [ft]	y sway	z sway
3	47	CF1A	3	Lbyy		
4	50	CF1A	3	Lbyy		

Member Point Loads (BLC 1 : Dead)

	Member Label	Direction	Magnitude [k, k-ft]	Location [(ft, %)]
1	31	Y	-0.108	%5
2	31	Y	-0.108	%95
3	31	Y	-0.053	%50
4	31	Y	-0.106	%25
5	31	Y	0	0
6	52	Y	-0.06	%50
7	52	Y	0	0
8	52	Y	0	0
9	52	Y	0	0
10	52	Y	0	0
11	30	Y	-0.037	%5
12	30	Y	-0.037	%35
13	30	Y	-0.037	%60
14	30	Y	-0.037	%95
15	30	Y	0	0
16	27	Y	-0.041	%5
17	27	Y	-0.041	%95
18	27	Y	-0.073	%20
19	27	Y	-0.077	%20
20	27	Y	0	0
21	51	Y	-0.026	%50
22	51	Y	0	0
23	51	Y	0	0
24	51	Y	0	0
25	51	Y	0	0

Member Point Loads (BLC 2 : 0 Wind - No Ice)

	Member Label	Direction	Magnitude [k, k-ft]	Location [(ft, %)]
1	31	Z	-0.346	%5
2	31	Z	-0.346	%95
3	31	Z	-0.038	%50
4	31	Z	-0.124	%25
5	31	Z	0	0
6	52	Z	-0.042	%50
7	52	Z	0	0
8	52	Z	0	0
9	52	Z	0	0
10	52	Z	0	0
11	30	Z	-0.048	%5
12	30	Z	-0.048	%35
13	30	Z	-0.048	%60
14	30	Z	-0.048	%95
15	30	Z	0	0
16	27	Z	-0.205	%5
17	27	Z	-0.205	%95
18	27	Z	-0.029	%20
19	27	Z	-0.055	%20
20	27	Z	0	0
21	51	Z	-0.062	%50
22	51	Z	0	0
23	51	Z	0	0
24	51	Z	0	0

Attachment: 1 PC-2022-04 Packet (5951 : AT&T - Special Permit Application)

Member Point Loads (BLC 2 : 0 Wind - No Ice) (Continued)

	Member Label	Direction	Magnitude [k, k-ft]	Location [(ft, %)]
25	51	Z	0	0

Member Point Loads (BLC 3 : 90 Wind - No Ice)

	Member Label	Direction	Magnitude [k, k-ft]	Location [(ft, %)]
1	31	X	-0.157	%5
2	31	X	-0.157	%95
3	31	X	-0.065	%50
4	31	X	-0.072	%25
5	31	X	0	0
6	52	X	-0.024	%50
7	52	X	0	0
8	52	X	0	0
9	52	X	0	0
10	52	X	0	0
11	30	X	-0.025	%5
12	30	X	-0.025	%35
13	30	X	-0.025	%60
14	30	X	-0.025	%95
15	30	X	0	0
16	27	X	-0.076	%5
17	27	X	-0.076	%95
18	27	X	-0.037	%20
19	27	X	-0.077	%20
20	27	X	0	0
21	51	X	-0.111	%50
22	51	X	0	0
23	51	X	0	0
24	51	X	0	0
25	51	X	0	0

Member Point Loads (BLC 4 : 0 Wind - Ice)

	Member Label	Direction	Magnitude [k, k-ft]	Location [(ft, %)]
1	31	Z	-0.085	%5
2	31	Z	-0.085	%95
3	31	Z	-0.012	%50
4	31	Z	-0.036	%25
5	31	Z	0	0
6	52	Z	-0.013	%50
7	52	Z	0	0
8	52	Z	0	0
9	52	Z	0	0
10	52	Z	0	0
11	30	Z	-0.013	%5
12	30	Z	-0.013	%35
13	30	Z	-0.013	%60
14	30	Z	-0.013	%95
15	30	Z	0	0
16	27	Z	-0.049	%5
17	27	Z	-0.049	%95
18	27	Z	-0.01	%20
19	27	Z	-0.016	%20
20	27	Z	0	0
21	51	Z	-0.018	%50
22	51	Z	0	0
23	51	Z	0	0
24	51	Z	0	0
25	51	Z	0	0

Attachment: 1 PC-2022-04 Packet (5951 : AT&T - Special Permit Application)

Member Point Loads (BLC 5 : 90 Wind - Ice)

	Member Label	Direction	Magnitude [k, k-ft]	Location [(ft, %)]
1	31	X	-0.047	%5
2	31	X	-0.047	%95
3	31	X	-0.018	%50
4	31	X	-0.024	%25
5	31	X	0	0
6	52	X	-0.008	%50
7	52	X	0	0
8	52	X	0	0
9	52	X	0	0
10	52	X	0	0
11	30	X	-0.008	%5
12	30	X	-0.008	%35
13	30	X	-0.008	%60
14	30	X	-0.008	%95
15	30	X	0	0
16	27	X	-0.022	%5
17	27	X	-0.022	%95
18	27	X	-0.011	%20
19	27	X	-0.021	%20
20	27	X	0	0
21	51	X	-0.029	%50
22	51	X	0	0
23	51	X	0	0
24	51	X	0	0
25	51	X	0	0

Member Point Loads (BLC 6 : 0 Wind - Service)

	Member Label	Direction	Magnitude [k, k-ft]	Location [(ft, %)]
1	31	Z	-0.038	%5
2	31	Z	-0.038	%95
3	31	Z	-0.004	%50
4	31	Z	-0.014	%25
5	31	Z	0	0
6	52	Z	-0.005	%50
7	52	Z	0	0
8	52	Z	0	0
9	52	Z	0	0
10	52	Z	0	0
11	30	Z	-0.006	%5
12	30	Z	-0.006	%35
13	30	Z	-0.006	%60
14	30	Z	-0.006	%95
15	30	Z	0	0
16	27	Z	-0.023	%5
17	27	Z	-0.023	%95
18	27	Z	-0.003	%20
19	27	Z	-0.006	%20
20	27	Z	0	0
21	51	Z	-0.007	%50
22	51	Z	0	0
23	51	Z	0	0
24	51	Z	0	0
25	51	Z	0	0

Attachment: 1 PC-2022-04 Packet (5951 : AT&T - Special Permit Application)

Member Point Loads (BLC 7 : 90 Wind - Service)

	Member Label	Direction	Magnitude [k, k-ft]	Location [(ft, %)]
1	31	X	-0.017	%5
2	31	X	-0.017	%95
3	31	X	-0.007	%50
4	31	X	-0.008	%25
5	31	X	0	0
6	52	X	-0.003	%50
7	52	X	0	0
8	52	X	0	0
9	52	X	0	0
10	52	X	0	0
11	30	X	-0.003	%5
12	30	X	-0.003	%35
13	30	X	-0.003	%60
14	30	X	-0.003	%95
15	30	X	0	0
16	27	X	-0.009	%5
17	27	X	-0.009	%95
18	27	X	-0.004	%20
19	27	X	-0.009	%20
20	27	X	0	0
21	51	X	-0.013	%50
22	51	X	0	0
23	51	X	0	0
24	51	X	0	0
25	51	X	0	0

Member Point Loads (BLC 8 : Ice)

	Member Label	Direction	Magnitude [k, k-ft]	Location [(ft, %)]
1	31	Y	-0.312	%5
2	31	Y	-0.312	%95
3	31	Y	-0.07	%50
4	31	Y	-0.14	%25
5	31	Y	0	0
6	52	Y	-0.046	%50
7	52	Y	0	0
8	52	Y	0	0
9	52	Y	0	0
10	52	Y	0	0
11	30	Y	-0.052	%5
12	30	Y	-0.052	%35
13	30	Y	-0.052	%60
14	30	Y	-0.052	%95
15	30	Y	0	0
16	27	Y	-0.19	%5
17	27	Y	-0.19	%95
18	27	Y	-0.045	%20
19	27	Y	-0.088	%20
20	27	Y	0	0
21	51	Y	-0.117	%50
22	51	Y	0	0
23	51	Y	0	0
24	51	Y	0	0
25	51	Y	0	0

Attachment: 1 PC-2022-04 Packet (5951 : AT&T - Special Permit Application)

Member Point Loads (BLC 13 : Maint LL 1)

	Member Label	Direction	Magnitude [k, k-ft]	Location [(ft, %)]
1	1	Y	-0.25	%95

Member Point Loads (BLC 14 : Maint LL 2)

	Member Label	Direction	Magnitude [k, k-ft]	Location [(ft, %)]
1	2	Y	-0.25	%95

Member Point Loads (BLC 15 : Maint LL 3)

	Member Label	Direction	Magnitude [k, k-ft]	Location [(ft, %)]
1	3	Y	-0.25	%50

Member Point Loads (BLC 16 : Maint LL 4)

	Member Label	Direction	Magnitude [k, k-ft]	Location [(ft, %)]
1	4	Y	-0.25	%50

Member Point Loads (BLC 17 : Maint LL 5)

	Member Label	Direction	Magnitude [k, k-ft]	Location [(ft, %)]
1	5	Y	-0.25	%50

Member Point Loads (BLC 18 : Maint LL 6)

	Member Label	Direction	Magnitude [k, k-ft]	Location [(ft, %)]
1	6	Y	-0.25	%50

Member Distributed Loads (BLC 2 : 0 Wind - No Ice)

	Member Label	Direction	Start Magnitude [k/ft, F, ksf, k-ft/ft]	End Magnitude [k/ft, F, ksf, k-ft/ft]	Start Location [(ft, %)]	End Location [(ft, %)]
1	1	Z	-0.011	-0.011	0	%100
2	2	Z	-0.011	-0.011	0	%100
3	3	Z	-0.01	-0.01	0	%100
4	4	Z	-0.01	-0.01	0	%100
5	5	Z	-0.01	-0.01	0	%100
6	6	Z	-0.01	-0.01	0	%100
7	7	Z	-0.014	-0.014	0	%100
8	8	Z	-0.014	-0.014	0	%100
9	9	Z	-0.007	-0.007	0	%100
10	10	Z	-0.007	-0.007	0	%100
11	11	Z	-0.007	-0.007	0	%100
12	12	Z	-0.007	-0.007	0	%100
13	13	Z	-0.007	-0.007	0	%100
14	14	Z	-0.007	-0.007	0	%100
15	17	Z	-0.007	-0.007	0	%100
16	24	Z	-0.005	-0.005	0	%100
17	27	Z	-0.005	-0.005	0	%100
18	30	Z	-0.005	-0.005	0	%100
19	31	Z	-0.005	-0.005	0	%100
20	34	Z	-0.005	-0.005	0	%100
21	37	Z	-0.005	-0.005	0	%100
22	38	Z	-0.005	-0.005	0	%100
23	43	Z	-0.006	-0.006	0	%100
24	44	Z	-0.006	-0.006	0	%100
25	47	Z	-0.006	-0.006	0	%100
26	50	Z	-0.006	-0.006	0	%100

Member Distributed Loads (BLC 3 : 90 Wind - No Ice)

	Member Label	Direction	Start Magnitude [k/ft, F, ksf, k-ft/ft]	End Magnitude [k/ft, F, ksf, k-ft/ft]	Start Location [(ft, %)]	End Location [(ft, %)]
1	1	X	-0.011	-0.011	0	%100
2	2	X	-0.011	-0.011	0	%100

Attachment: 1 PC-2022-04 Packet (5951 : AT&T - Special Permit Application)

Member Distributed Loads (BLC 3 : 90 Wind - No Ice) (Continued)

	Member Label	Direction	Start Magnitude [k/ft, F, ksf, k-ft/ft]	End Magnitude [k/ft, F, ksf, k-ft/ft]	Start Location [(ft, %)]	End Location [(ft, %)]
3	3	X	-0.01	-0.01	0	%100
4	4	X	-0.01	-0.01	0	%100
5	5	X	-0.01	-0.01	0	%100
6	6	X	-0.01	-0.01	0	%100
7	7	X	-0.014	-0.014	0	%100
8	8	X	-0.014	-0.014	0	%100
9	9	X	-0.007	-0.007	0	%100
10	10	X	-0.007	-0.007	0	%100
11	11	X	-0.007	-0.007	0	%100
12	12	X	-0.007	-0.007	0	%100
13	13	X	-0.007	-0.007	0	%100
14	14	X	-0.007	-0.007	0	%100
15	17	X	-0.007	-0.007	0	%100
16	24	X	-0.005	-0.005	0	%100
17	27	X	-0.005	-0.005	0	%100
18	30	X	-0.005	-0.005	0	%100
19	31	X	-0.005	-0.005	0	%100
20	34	X	-0.005	-0.005	0	%100
21	37	X	-0.005	-0.005	0	%100
22	38	X	-0.005	-0.005	0	%100
23	43	X	-0.006	-0.006	0	%100
24	44	X	-0.006	-0.006	0	%100
25	47	X	-0.006	-0.006	0	%100
26	50	X	-0.006	-0.006	0	%100

Member Distributed Loads (BLC 4 : 0 Wind - Ice)

	Member Label	Direction	Start Magnitude [k/ft, F, ksf, k-ft/ft]	End Magnitude [k/ft, F, ksf, k-ft/ft]	Start Location [(ft, %)]	End Location [(ft, %)]
1	1	Z	-0.005	-0.005	0	%100
2	2	Z	-0.005	-0.005	0	%100
3	3	Z	-0.004	-0.004	0	%100
4	4	Z	-0.004	-0.004	0	%100
5	5	Z	-0.004	-0.004	0	%100
6	6	Z	-0.004	-0.004	0	%100
7	7	Z	-0.005	-0.005	0	%100
8	8	Z	-0.005	-0.005	0	%100
9	9	Z	-0.004	-0.004	0	%100
10	10	Z	-0.004	-0.004	0	%100
11	11	Z	-0.004	-0.004	0	%100
12	12	Z	-0.004	-0.004	0	%100
13	13	Z	-0.004	-0.004	0	%100
14	14	Z	-0.004	-0.004	0	%100
15	17	Z	-0.002	-0.002	0	%100
16	24	Z	-0.001	-0.001	0	%100
17	27	Z	-0.001	-0.001	0	%100
18	30	Z	-0.001	-0.001	0	%100
19	31	Z	-0.001	-0.001	0	%100
20	34	Z	-0.001	-0.001	0	%100
21	37	Z	-0.001	-0.001	0	%100
22	38	Z	-0.001	-0.001	0	%100
23	43	Z	-0.004	-0.004	0	%100
24	44	Z	-0.004	-0.004	0	%100
25	47	Z	-0.004	-0.004	0	%100
26	50	Z	-0.004	-0.004	0	%100

Attachment: 1 PC-2022-04 Packet (5951 : AT&T - Special Permit Application)

Member Distributed Loads (BLC 5 : 90 Wind - Ice)

	Member Label	Direction	Start Magnitude [k/ft, F, ksf, k-ft/ft]	End Magnitude [k/ft, F, ksf, k-ft/ft]	Start Location [(ft, %)]	End Location [(ft, %)]
1	1	X	-0.005	-0.005	0	%100
2	2	X	-0.005	-0.005	0	%100
3	3	X	-0.004	-0.004	0	%100
4	4	X	-0.004	-0.004	0	%100
5	5	X	-0.004	-0.004	0	%100
6	6	X	-0.004	-0.004	0	%100
7	7	X	-0.005	-0.005	0	%100
8	8	X	-0.005	-0.005	0	%100
9	9	X	-0.004	-0.004	0	%100
10	10	X	-0.004	-0.004	0	%100
11	11	X	-0.004	-0.004	0	%100
12	12	X	-0.004	-0.004	0	%100
13	13	X	-0.004	-0.004	0	%100
14	14	X	-0.004	-0.004	0	%100
15	17	X	-0.002	-0.002	0	%100
16	24	X	-0.001	-0.001	0	%100
17	27	X	-0.001	-0.001	0	%100
18	30	X	-0.001	-0.001	0	%100
19	31	X	-0.001	-0.001	0	%100
20	34	X	-0.001	-0.001	0	%100
21	37	X	-0.001	-0.001	0	%100
22	38	X	-0.001	-0.001	0	%100
23	43	X	-0.004	-0.004	0	%100
24	44	X	-0.004	-0.004	0	%100
25	47	X	-0.004	-0.004	0	%100
26	50	X	-0.004	-0.004	0	%100

Member Distributed Loads (BLC 6 : 0 Wind - Service)

	Member Label	Direction	Start Magnitude [k/ft, F, ksf, k-ft/ft]	End Magnitude [k/ft, F, ksf, k-ft/ft]	Start Location [(ft, %)]	End Location [(ft, %)]
1	1	Z	-0.001	-0.001	0	%100
2	2	Z	-0.001	-0.001	0	%100
3	3	Z	-0.001	-0.001	0	%100
4	4	Z	-0.001	-0.001	0	%100
5	5	Z	-0.001	-0.001	0	%100
6	6	Z	-0.001	-0.001	0	%100
7	7	Z	-0.002	-0.002	0	%100
8	8	Z	-0.002	-0.002	0	%100
9	9	Z	-0.0007	-0.0007	0	%100
10	10	Z	-0.0007	-0.0007	0	%100
11	11	Z	-0.0008	-0.0008	0	%100
12	12	Z	-0.0007	-0.0007	0	%100
13	13	Z	-0.0007	-0.0007	0	%100
14	14	Z	-0.0008	-0.0008	0	%100
15	17	Z	-0.0004	-0.0004	0	%100
16	24	Z	-0.0003	-0.0003	0	%100
17	27	Z	-0.0003	-0.0003	0	%100
18	30	Z	-0.0003	-0.0003	0	%100
19	31	Z	-0.0003	-0.0003	0	%100
20	34	Z	-0.0003	-0.0003	0	%100
21	37	Z	-0.0003	-0.0003	0	%100
22	38	Z	-0.0003	-0.0003	0	%100
23	43	Z	-0.0007	-0.0007	0	%100
24	44	Z	-0.0007	-0.0007	0	%100
25	47	Z	-0.0007	-0.0007	0	%100
26	50	Z	-0.0007	-0.0007	0	%100

Attachment: 1 PC-2022-04 Packet (5951 : AT&T - Special Permit Application)

Member Distributed Loads (BLC 7 : 90 Wind - Service)

	Member Label	Direction	Start Magnitude [k/ft, F, ksf, k-ft/ft]	End Magnitude [k/ft, F, ksf, k-ft/ft]	Start Location [(ft, %)]	End Location [(ft, %)]
1	1	X	-0.001	-0.001	0	%100
2	2	X	-0.001	-0.001	0	%100
3	3	X	-0.001	-0.001	0	%100
4	4	X	-0.001	-0.001	0	%100
5	5	X	-0.001	-0.001	0	%100
6	6	X	-0.001	-0.001	0	%100
7	7	X	-0.002	-0.002	0	%100
8	8	X	-0.002	-0.002	0	%100
9	9	X	-0.0007	-0.0007	0	%100
10	10	X	-0.0007	-0.0007	0	%100
11	11	X	-0.0008	-0.0008	0	%100
12	12	X	-0.0007	-0.0007	0	%100
13	13	X	-0.0007	-0.0007	0	%100
14	14	X	-0.0008	-0.0008	0	%100
15	17	X	-0.0004	-0.0004	0	%100
16	24	X	-0.0003	-0.0003	0	%100
17	27	X	-0.0003	-0.0003	0	%100
18	30	X	-0.0003	-0.0003	0	%100
19	31	X	-0.0003	-0.0003	0	%100
20	34	X	-0.0003	-0.0003	0	%100
21	37	X	-0.0003	-0.0003	0	%100
22	38	X	-0.0003	-0.0003	0	%100
23	43	X	-0.0007	-0.0007	0	%100
24	44	X	-0.0007	-0.0007	0	%100
25	47	X	-0.0007	-0.0007	0	%100
26	50	X	-0.0007	-0.0007	0	%100

Member Distributed Loads (BLC 8 : Ice)

	Member Label	Direction	Start Magnitude [k/ft, F, ksf, k-ft/ft]	End Magnitude [k/ft, F, ksf, k-ft/ft]	Start Location [(ft, %)]	End Location [(ft, %)]
1	1	Y	-0.012	-0.012	0	%100
2	2	Y	-0.012	-0.012	0	%100
3	3	Y	-0.012	-0.012	0	%100
4	4	Y	-0.012	-0.012	0	%100
5	5	Y	-0.012	-0.012	0	%100
6	6	Y	-0.012	-0.012	0	%100
7	7	Y	-0.017	-0.017	0	%100
8	8	Y	-0.017	-0.017	0	%100
9	9	Y	-0.009	-0.009	0	%100
10	10	Y	-0.009	-0.009	0	%100
11	11	Y	-0.009	-0.009	0	%100
12	12	Y	-0.009	-0.009	0	%100
13	13	Y	-0.009	-0.009	0	%100
14	14	Y	-0.009	-0.009	0	%100
15	17	Y	-0.009	-0.009	0	%100
16	24	Y	-0.008	-0.008	0	%100
17	27	Y	-0.008	-0.008	0	%100
18	30	Y	-0.008	-0.008	0	%100
19	31	Y	-0.008	-0.008	0	%100
20	34	Y	-0.008	-0.008	0	%100
21	37	Y	-0.008	-0.008	0	%100
22	38	Y	-0.008	-0.008	0	%100
23	43	Y	-0.008	-0.008	0	%100
24	44	Y	-0.008	-0.008	0	%100
25	47	Y	-0.008	-0.008	0	%100
26	50	Y	-0.008	-0.008	0	%100

Attachment: 1 PC-2022-04 Packet (5951 : AT&T - Special Permit Application)

Node Loads and Enforced Displacements (BLC 9 : Live Load a)

	Node Label	L, D, M	Direction	Magnitude [(k, k-ft), (in, rad), (k*s²/ft, k*s²*ft)]
1	36	L	Y	-0.5

Node Loads and Enforced Displacements (BLC 10 : Live Load b)

	Node Label	L, D, M	Direction	Magnitude [(k, k-ft), (in, rad), (k*s²/ft, k*s²*ft)]
1	46	L	Y	-0.5

Node Loads and Enforced Displacements (BLC 11 : Live Load c)

	Node Label	L, D, M	Direction	Magnitude [(k, k-ft), (in, rad), (k*s²/ft, k*s²*ft)]
1	52	L	Y	-0.5

Node Loads and Enforced Displacements (BLC 12 : Live Load d)

	Node Label	L, D, M	Direction	Magnitude [(k, k-ft), (in, rad), (k*s²/ft, k*s²*ft)]
1	60	L	Y	-0.5

Node Loads and Enforced Displacements (BLC 19 : Live Load e)

	Node Label	L, D, M	Direction	Magnitude [(k, k-ft), (in, rad), (k*s²/ft, k*s²*ft)]
1	40	L	Y	-0.5

Basic Load Cases

	BLC Description	Category	Y Gravity	Nodal	Point	Distributed
1	Dead	DL	-1		25	
2	0 Wind - No Ice	WLZ			25	26
3	90 Wind - No Ice	WLX			25	26
4	0 Wind - Ice	WLZ			25	26
5	90 Wind - Ice	WLX			25	26
6	0 Wind - Service	WLZ			25	26
7	90 Wind - Service	WLX			25	26
8	Ice	OL1			25	26
9	Live Load a	LL		1		
10	Live Load b	LL		1		
11	Live Load c	LL		1		
12	Live Load d	LL		1		
13	Maint LL 1	LL			1	
14	Maint LL 2	LL			1	
15	Maint LL 3	LL			1	
16	Maint LL 4	LL			1	
17	Maint LL 5	LL			1	
18	Maint LL 6	LL			1	
19	Live Load e	LL		1		

Load Combinations

	Description	Solve	PDelta	BLC	Factor	BLC	Factor	BLC	Factor	BLC	Factor
1	1.4 Dead	Yes	Y	1	1.4						
2	0.9 D + 1.6 - 0 W	Yes	Y	1	0.9	2	1.6				
3	0.9 D + 1.6 - 30 W	Yes	Y	1	0.9	2	1.386	3	0.8		
4	0.9 D + 1.6 - 60 W	Yes	Y	1	0.9	3	1.386	2	0.8		
5	0.9 D + 1.6 - 90 W	Yes	Y	1	0.9	3	1.6				
6	0.9 D + 1.6 - 120 W	Yes	Y	1	0.9	3	1.386	2	-0.8		
7	0.9 D + 1.6 - 150 W	Yes	Y	1	0.9	2	-1.386	3	0.8		
8	0.9 D + 1.6 - 180 W	Yes	Y	1	0.9	2	-1.6				
9	0.9 D + 1.6 - 210 W	Yes	Y	1	0.9	2	-1.386	3	-0.8		
10	0.9 D + 1.6 - 240 W	Yes	Y	1	0.9	3	-1.386	2	-0.8		
11	0.9 D + 1.6 - 270 W	Yes	Y	1	0.9	3	-1.6				
12	0.9 D + 1.6 - 300 W	Yes	Y	1	0.9	3	-1.386	2	0.8		
13	0.9 D + 1.6 - 330 W	Yes	Y	1	0.9	2	1.386	3	-0.8		

Attachment: 1 PC-2022-04 Packet (5951 : AT&T - Special Permit Application)

Load Combinations (Continued)

	Description	Solve	PDelta	BLC	Factor	BLC	Factor	BLC	Factor	BLC	Factor
14	1.2 D + 1.6 - 0 W	Yes	Y	1	1.2	2	1.6				
15	1.2 D + 1.6 - 30 W	Yes	Y	1	1.2	2	1.386	3	0.8		
16	1.2 D + 1.6 - 60 W	Yes	Y	1	1.2	3	1.386	2	0.8		
17	1.2 D + 1.6 - 90 W	Yes	Y	1	1.2	3	1.6				
18	1.2 D + 1.6 - 120 W	Yes	Y	1	1.2	3	1.386	2	-0.8		
19	1.2 D + 1.6 - 150 W	Yes	Y	1	1.2	2	-1.386	3	0.8		
20	1.2 D + 1.6 - 180 W	Yes	Y	1	1.2	2	-1.6				
21	1.2 D + 1.6 - 210 W	Yes	Y	1	1.2	2	-1.386	3	-0.8		
22	1.2 D + 1.6 - 240 W	Yes	Y	1	1.2	3	-1.386	2	-0.8		
23	1.2 D + 1.6 - 270 W	Yes	Y	1	1.2	3	-1.6				
24	1.2 D + 1.6 - 300 W	Yes	Y	1	1.2	3	-1.386	2	0.8		
25	1.2 D + 1.6 - 330 W	Yes	Y	1	1.2	2	1.386	3	-0.8		
26	0.9 D + 1.6 - 0 W/Ice	Yes	Y	1	0.9	4	1.6			8	1
27	0.9 D + 1.6 - 30 W/Ice	Yes	Y	1	0.9	4	1.386	5	0.8	8	1
28	0.9 D + 1.6 - 60 W/Ice	Yes	Y	1	0.9	5	1.386	4	0.8	8	1
29	0.9 D + 1.6 - 90 W/Ice	Yes	Y	1	0.9	5	1.6			8	1
30	0.9 D + 1.6 - 120 W/Ice	Yes	Y	1	0.9	5	1.386	4	-0.8	8	1
31	0.9 D + 1.6 - 150 W/Ice	Yes	Y	1	0.9	4	-1.386	5	0.8	8	1
32	0.9 D + 1.6 - 180 W/Ice	Yes	Y	1	0.9	4	-1.6			8	1
33	0.9 D + 1.6 - 210 W/Ice	Yes	Y	1	0.9	4	-1.386	5	-0.8	8	1
34	0.9 D + 1.6 - 240 W/Ice	Yes	Y	1	0.9	5	-1.386	4	-0.8	8	1
35	0.9 D + 1.6 - 270 W/Ice	Yes	Y	1	0.9	5	-1.6			8	1
36	0.9 D + 1.6 - 300 W/Ice	Yes	Y	1	0.9	5	-1.386	4	0.8	8	1
37	0.9 D + 1.6 - 330 W/Ice	Yes	Y	1	0.9	4	1.386	5	-0.8	8	1
38	1.2 D + 1.0 - 0 W/Ice	Yes	Y	1	1.2	4	1			8	1
39	1.2 D + 1.0 - 30 W/Ice	Yes	Y	1	1.2	4	0.866	5	0.5	8	1
40	1.2 D + 1.0 - 60 W/Ice	Yes	Y	1	1.2	5	0.866	4	0.5	8	1
41	1.2 D + 1.0 - 90 W/Ice	Yes	Y	1	1.2	5	1			8	1
42	1.2 D + 1.0 - 120 W/Ice	Yes	Y	1	1.2	5	0.866	4	-0.5	8	1
43	1.2 D + 1.0 - 150 W/Ice	Yes	Y	1	1.2	4	-0.866	5	0.5	8	1
44	1.2 D + 1.0 - 180 W/Ice	Yes	Y	1	1.2	4	-1			8	1
45	1.2 D + 1.0 - 210 W/Ice	Yes	Y	1	1.2	4	-0.866	5	-0.5	8	1
46	1.2 D + 1.0 - 240 W/Ice	Yes	Y	1	1.2	5	-0.866	4	-0.5	8	1
47	1.2 D + 1.0 - 270 W/Ice	Yes	Y	1	1.2	5	-1			8	1
48	1.2 D + 1.0 - 300 W/Ice	Yes	Y	1	1.2	5	-0.866	4	0.5	8	1
49	1.2 D + 1.0 - 330 W/Ice	Yes	Y	1	1.2	4	0.866	5	-0.5	8	1
50	1.2 D + 1.5 LL a + Service - 0 W	Yes	Y	1	1.2	6	1			9	1.5
51	1.2 D + 1.5 LL a + Service - 30 W	Yes	Y	1	1.2	6	0.866	7	0.5	9	1.5
52	1.2 D + 1.5 LL a + Service - 60 W	Yes	Y	1	1.2	7	0.866	6	0.5	9	1.5
53	1.2 D + 1.5 LL a + Service - 90 W	Yes	Y	1	1.2	7	1			9	1.5
54	1.2 D + 1.5 LL a + Service - 120 W	Yes	Y	1	1.2	7	0.866	6	-0.5	9	1.5
55	1.2 D + 1.5 LL a + Service - 150 W	Yes	Y	1	1.2	6	-0.866	7	0.5	9	1.5
56	1.2 D + 1.5 LL a + Service - 180 W	Yes	Y	1	1.2	6	-1			9	1.5
57	1.2 D + 1.5 LL a + Service - 210 W	Yes	Y	1	1.2	6	-0.866	7	-0.5	9	1.5
58	1.2 D + 1.5 LL a + Service - 240 W	Yes	Y	1	1.2	7	-0.866	6	-0.5	9	1.5
59	1.2 D + 1.5 LL a + Service - 270 W	Yes	Y	1	1.2	7	-1			9	1.5
60	1.2 D + 1.5 LL a + Service - 300 W	Yes	Y	1	1.2	7	-0.866	6	0.5	9	1.5
61	1.2 D + 1.5 LL a + Service - 330 W	Yes	Y	1	1.2	6	0.866	7	-0.5	9	1.5
62	1.2 D + 1.5 LL b + Service - 0 W	Yes	Y	1	1.2	6	1			10	1.5
63	1.2 D + 1.5 LL b + Service - 30 W	Yes	Y	1	1.2	6	0.866	7	0.5	10	1.5
64	1.2 D + 1.5 LL b + Service - 60 W	Yes	Y	1	1.2	7	0.866	6	0.5	10	1.5
65	1.2 D + 1.5 LL b + Service - 90 W	Yes	Y	1	1.2	7	1			10	1.5
66	1.2 D + 1.5 LL b + Service - 120 W	Yes	Y	1	1.2	7	0.866	6	-0.5	10	1.5
67	1.2 D + 1.5 LL b + Service - 150 W	Yes	Y	1	1.2	6	-0.866	7	0.5	10	1.5
68	1.2 D + 1.5 LL b + Service - 180 W	Yes	Y	1	1.2	6	-1			10	1.5
69	1.2 D + 1.5 LL b + Service - 210 W	Yes	Y	1	1.2	6	-0.866	7	-0.5	10	1.5
70	1.2 D + 1.5 LL b + Service - 240 W	Yes	Y	1	1.2	7	-0.866	6	-0.5	10	1.5
71	1.2 D + 1.5 LL b + Service - 270 W	Yes	Y	1	1.2	7	-1			10	1.5

Attachment: 1 PC-2022-04 Packet (5951 : AT&T - Special Permit Application)

Load Combinations (Continued)

	Description	Solve	PDelta	BLC	Factor	BLC	Factor	BLC	Factor	BLC	Factor
72	1.2 D + 1.5 LL b + Service - 300 W	Yes	Y	1	1.2	7	-0.866	6	0.5	10	1.5
73	1.2 D + 1.5 LL b + Service - 330 W	Yes	Y	1	1.2	6	0.866	7	-0.5	10	1.5
74	1.2 D + 1.5 LL c + Service - 0 W	Yes	Y	1	1.2	6	1			11	1.5
75	1.2 D + 1.5 LL c + Service - 30 W	Yes	Y	1	1.2	6	0.866	7	0.5	11	1.5
76	1.2 D + 1.5 LL c + Service - 60 W	Yes	Y	1	1.2	7	0.866	6	0.5	11	1.5
77	1.2 D + 1.5 LL c + Service - 90 W	Yes	Y	1	1.2	7	1			11	1.5
78	1.2 D + 1.5 LL c + Service - 120 W	Yes	Y	1	1.2	7	0.866	6	-0.5	11	1.5
79	1.2 D + 1.5 LL c + Service - 150 W	Yes	Y	1	1.2	6	-0.866	7	0.5	11	1.5
80	1.2 D + 1.5 LL c + Service - 180 W	Yes	Y	1	1.2	6	-1			11	1.5
81	1.2 D + 1.5 LL c + Service - 210 W	Yes	Y	1	1.2	6	-0.866	7	-0.5	11	1.5
82	1.2 D + 1.5 LL c + Service - 240 W	Yes	Y	1	1.2	7	-0.866	6	-0.5	11	1.5
83	1.2 D + 1.5 LL c + Service - 270 W	Yes	Y	1	1.2	7	-1			11	1.5
84	1.2 D + 1.5 LL c + Service - 300 W	Yes	Y	1	1.2	7	-0.866	6	0.5	11	1.5
85	1.2 D + 1.5 LL c + Service - 330 W	Yes	Y	1	1.2	6	0.866	7	-0.5	11	1.5
86	1.2 D + 1.5 LL d + Service - 0 W	Yes	Y	1	1.2	6	1			12	1.5
87	1.2 D + 1.5 LL d + Service - 30 W	Yes	Y	1	1.2	6	0.866	7	0.5	12	1.5
88	1.2 D + 1.5 LL d + Service - 60 W	Yes	Y	1	1.2	7	0.866	6	0.5	12	1.5
89	1.2 D + 1.5 LL d + Service - 90 W	Yes	Y	1	1.2	7	1			12	1.5
90	1.2 D + 1.5 LL d + Service - 120 W	Yes	Y	1	1.2	7	0.866	6	-0.5	12	1.5
91	1.2 D + 1.5 LL d + Service - 150 W	Yes	Y	1	1.2	6	-0.866	7	0.5	12	1.5
92	1.2 D + 1.5 LL d + Service - 180 W	Yes	Y	1	1.2	6	-1			12	1.5
93	1.2 D + 1.5 LL d + Service - 210 W	Yes	Y	1	1.2	6	-0.866	7	-0.5	12	1.5
94	1.2 D + 1.5 LL d + Service - 240 W	Yes	Y	1	1.2	7	-0.866	6	-0.5	12	1.5
95	1.2 D + 1.5 LL d + Service - 270 W	Yes	Y	1	1.2	7	-1			12	1.5
96	1.2 D + 1.5 LL d + Service - 300 W	Yes	Y	1	1.2	7	-0.866	6	0.5	12	1.5
97	1.2 D + 1.5 LL d + Service - 330 W	Yes	Y	1	1.2	6	0.866	7	-0.5	12	1.5
98	1.2 D + 1.5 LL Maint (1)	Yes	Y	1	1.2					13	1.5
99	1.2 D + 1.5 LL Maint (2)	Yes	Y	1	1.2					14	1.5
100	1.2 D + 1.5 LL Maint (3)	Yes	Y	1	1.2					15	1.5
101	1.2 D + 1.5 LL Maint (4)	Yes	Y	1	1.2					16	1.5
102	1.2 D + 1.5 LL Maint (5)	Yes	Y	1	1.2					17	1.5
103	1.2 D + 1.5 LL Maint (6)	Yes	Y	1	1.2					18	1.5
104	1.2 D + 1.5 LL e + Service - 0 W	Yes	Y	1	1.2	6	1			19	1.5
105	1.2 D + 1.5 LL e + Service - 30 W	Yes	Y	1	1.2	6	0.866	7	0.5	19	1.5
106	1.2 D + 1.5 LL e + Service - 60 W	Yes	Y	1	1.2	7	0.866	6	0.5	19	1.5
107	1.2 D + 1.5 LL e + Service - 90 W	Yes	Y	1	1.2	7	1			19	1.5
108	1.2 D + 1.5 LL e + Service - 120 W	Yes	Y	1	1.2	7	0.866	6	-0.5	19	1.5
109	1.2 D + 1.5 LL e + Service - 150 W	Yes	Y	1	1.2	6	-0.866	7	0.5	19	1.5
110	1.2 D + 1.5 LL e + Service - 180 W	Yes	Y	1	1.2	6	-1			19	1.5
111	1.2 D + 1.5 LL e + Service - 210 W	Yes	Y	1	1.2	6	-0.866	7	-0.5	19	1.5
112	1.2 D + 1.5 LL e + Service - 240 W	Yes	Y	1	1.2	7	-0.866	6	-0.5	19	1.5
113	1.2 D + 1.5 LL e + Service - 270 W	Yes	Y	1	1.2	7	-1			19	1.5
114	1.2 D + 1.5 LL e + Service - 300 W	Yes	Y	1	1.2	7	-0.866	6	0.5	19	1.5
115	1.2 D + 1.5 LL e + Service - 330 W	Yes	Y	1	1.2	6	0.866	7	-0.5	19	1.5

Envelope Node Reactions

	Node Label		X [k]	LC	Y [k]	LC	Z [k]	LC	MX [k-ft]	LC	MY [k-ft]	LC	MZ [k-ft]	LC
1	97	max	1.331	12	0.043	48	1.958	18	0	115	0	115	0	115
2		min	-1.343	18	0.008	6	-1.973	12	0	1	0	1	0	1
3	103	max	1.689	5	2.386	43	2.208	2	1.225	20	1.992	6	0.631	5
4		min	-2.834	23	0.43	13	-4.182	20	-1.161	2	-2.298	24	-0.86	23
5	105	max	2.783	18	2.279	49	3.96	25	1.153	25	1.887	18	0.863	12
6		min	-1.63	12	0.413	7	-1.95	7	-1.043	7	-1.629	12	-1.094	18
7	Totals:	max	3.165	17	4.642	42	4.278	2						
8		min	-3.165	11	1.212	12	-4.278	20						

Attachment: 1 PC-2022-04 Packet (5951 : AT&T - Special Permit Application)

Envelope AISC 13TH (360-05): LRFD Member Steel Code Checks

	Member	Shape	Code Check	Loc[ft]	LC	Shear Check	Loc[ft]	Dir	LC	phi*Pnc [k]	phi*Pnt [k]	phi*Mn y-y [k-ft]	phi*Mn z-z [k-ft]	Cb	Eqn
1	1	L3X3X4	1.219	10.512	8	0.128	10.641	z	14	4.981	64.8	2.345	3.484	1.5	H2-1
2	2	L3X3X4	0.995	1.947	7	0.105	0.26	z	12	4.981	64.8	2.345	3.172	1.245	H2-1
3	3	L3X3X3	0.508	4.585	24	0.056	4.585	z	42	23.928	49.05	1.638	3.319	1.352	H2-1
4	4	L3X3X3	0.448	0.955	60	0.051	4.585	y	55	23.928	49.05	1.833	3.412	1.5	H2-1
5	5	L3X3X3	0.729	0.955	38	0.114	4.585	y	49	23.928	49.05	1.638	3.412	1.5	H2-1
6	6	L3X3X3	0.871	0.955	49	0.113	4.585	z	49	23.928	49.05	1.833	3.412	1.5	H2-1
7	7	L6X4X6	0.258	0.656	47	0.382	0.656	z	48	104.956	116.964	5.109	14.765	1.454	H2-1
8	8	L6X4X6	0.241	0.656	38	0.353	0.656	y	39	104.956	116.964	5.109	15.351	1.485	H2-1
9	9	L2x2x3	0.093	1.75	30	0.059	3	y	43	17.369	32.49	0.775	1.605	1.473	H2-1
10	10	L2x2x3	0.095	1.75	42	0.058	3	y	24	17.369	32.49	0.775	1.611	1.5	H2-1
11	11	L2x2x3	0.114	2.01	47	0.008	4.021	z	20	10.602	32.49	0.775	1.415	1.136	H2-1
12	12	L2x2x3	0.204	1.25	38	0.042	0.75	z	12	17.369	32.49	0.775	1.611	1.5	H2-1
13	13	L2x2x3	0.275	0.75	24	0.037	0	y	24	17.369	32.49	0.775	1.556	1.256	H2-1
14	14	L2x2x3	0.199	2.01	40	0.009	4.021	z	22	10.602	32.49	0.775	1.415	1.136	H2-1
15	17	PIPE_2.5	0.937	1	19	0.759	1		19	37.774	50.715	3.596	3.596	3	H3-6
16	24	PIPE_2.0	0.105	6	54	0.164	3		25	14.916	32.13	1.872	1.872	1.964	H1-1b
17	27	PIPE_2.0	0.606	3	20	0.213	3		25	14.916	32.13	1.872	1.872	2.172	H1-1b
18	30	PIPE_2.0	0.348	3	25	0.072	6		24	14.916	32.13	1.872	1.872	1.788	H1-1b
19	31	PIPE_2.0	0.935	3	20	0.262	3		14	14.916	32.13	1.872	1.872	1.923	H1-1b
20	34	PIPE_2.0	0.247	2.5	25	0.077	5.5		25	14.916	32.13	1.872	1.872	3	H1-1b
21	37	PIPE_2.0	0.433	3.49	12	0.415	3.958		25	23.809	32.13	1.872	1.872	2.509	H1-1b
22	38	PIPE_2.0	0.137	0	18	0.004	7.028		40	17.772	32.13	1.872	1.872	1.136	H1-1b*

Envelope AISI S100-07: LRFD Member Cold Formed Steel Code Checks

	Member	Shape	Code Check	Loc[ft]	LC	Shear Check	Loc[ft]	Dir	LC	phi*Pn[k]	phi*Tn[k]	phi*Mnyy[k-ft]	phi*Mnzz[k-ft]	Cb	Cmyy	Cmzz	Eqn
1	43	P1000	0.089	2.812	24	0.014	2.812	y	35	8.555	15.355	0.456	0.713	2.139	0.85	0.85	C5.2.2-3
2	44	P1000	0.039	2.812	56	0.014	2.812	y	55	8.555	15.355	0.432	0.713	2.058	0.85	0.85	C3.3.2-1
3	47	P1000	0.341	0.75	24	0.087	2.25	y	23	8.555	15.355	0.424	0.713	1.786	0.85	0.85	C5.2.2-3
4	50	P1000	0.34	2.25	24	0.079	2.812	y	41	8.555	15.355	0.424	0.713	1.466	0.85	0.85	C5.2.2-3

Attachment: 1 PC-2022-04 Packet (5951 : AT&T - Special Permit Application)

PROJECT	**160864.001.01 - Casady Square, OK**		**KSC**
SUBJECT	**TARP Mount Program Spec Sheet**		
DATE	**05/04/22**	PAGE	OF

B+T GRP
1717 S. Boulder, Suite 300
Tulsa, OK 74159
(918) 587-4630

TARP Mount Program Spec Sheet

BASIC WIND SPEED (mph)	Radial Ice (in)	Height (ft)	Exposure Category	Class	TOPO Category	Number of Mount Pipes / Sector	Average Allowable EPA w/o ice / pipe (ft sq)	Allowable Weight w/o ice / Sector (lbf)
109	1.5	70	C	II	1	6	**13**	**1291**

Attachment: 1 PC-2022-04 Packet (5951 : AT&T - Special Permit Application)

CITY OF NICHOLS HILLS

NOTICE OF PUBLIC HEARINGS
CITY OF NICHOLS HILLS, OKLAHOMA
CASE NO. PC-2022-05

Notice is hereby given that T-Mobile Central, LLC, represented by Branch Communications, LLC, has filed an application ("the Application") with the City of Nichols Hills, Oklahoma for approval of a special permit for the following described property:

> Existing water tower located at the NW corner of Westminster Place and Greystone Avenue in Nichols Hills, Oklahoma.

The zoning of this property is "R-1-60" Single Family Residential. The Application requests a special permit to replace and/or add new antennas and other equipment for AT&T, to be located on or adjacent to the water tower owned by the City of Nichols Hills, Oklahoma. The Application and supporting documentation may be inspected in the office of the City Clerk during regular business hours.

The Application will be considered at public hearings to be held by the Nichols Hills Planning Commission on Tuesday, August 2, 2022 at 5:30 p.m., and by the Nichols Hills City Council on Tuesday, August 9, 2022 at 5:30 p.m. These public hearings will be held in the Council Chambers at Nichols Hills City Hall, 6407 Avondale Drive, Nichols Hills, Oklahoma, 73116.

Any person may address the Nichols Hills Planning Commission and Nichols Hills City Council at the public hearings. Written support for or protest against the proposed special permit may be mailed or hand-delivered to the City Clerk at 6407 Avondale Drive, Nichols Hills, Oklahoma, 73116. Written support or protests must be received by the City Clerk not less than three (3) days before the public hearing.

Attachment: PC-2022-05 PACKET (5953 : T-Mobile - Special Permit Application)

The following map shows the area affected by the Application:

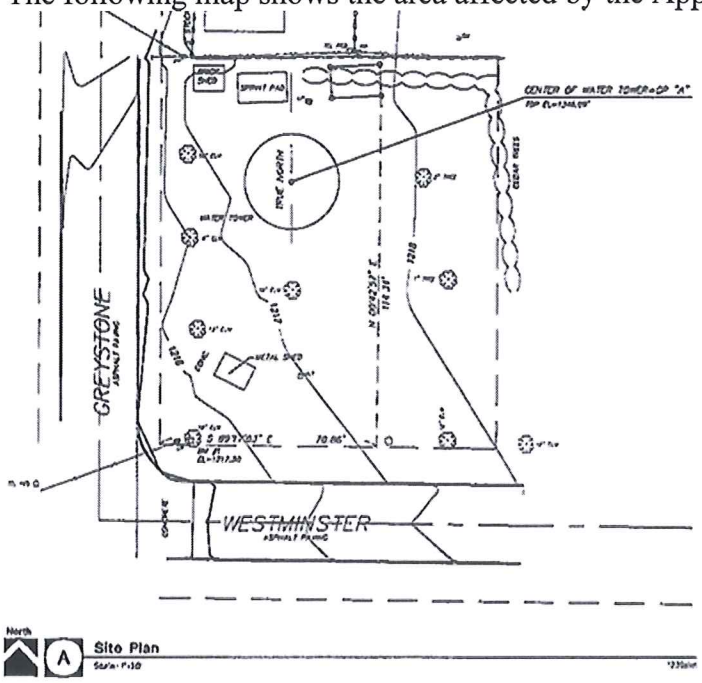

Dated this 19th day of July, 2022.

Amanda Copeland

Amanda Copeland, City Clerk
City of Nichols Hills, Oklahoma

Attachment: PC-2022-05 PACKET (5953 : T-Mobile - Special Permit Application)

CITY OF NICHOLS HILLS, OKLAHOMA

Application for Special Permit
Communication Device

Staff use only

Case # _____

Date filed _____

Fee receipt # _____

Twelve original sets and one electronic version of this completed application (including 12 original sets of the required attachments listed below) and the required fee should be submitted to the Nichols Hills City Clerk, 6407 Avondale Drive, Nichols Hills, Oklahoma 73116.

Applicant is encouraged to consult Sec. 50-127, *Communications Tower and Antenna Regulations*, of the Nichols Hills City Code when completing this Application. Note that Sec. 50-127 does not require a special permit for all communication devices.

This Application requires recommendation for approval by the Nichols Hills Planning Commission and approval of the Nichols Hills City Council.

Attach a separate sheet to provide complete answers if necessary.

Applicant's name: T-Mobile Central, LLC

Primary contact: Brittany Manley, Branch Communications, LLC, an agent on behalf of T-Mobile

Mailing address: 1900 NW Expressway, Ste. 800, Oklahoma City, OK 73118

Telephone number(s): (405) 549-7126

Email address(es): brittany.manley@branchcomm.net

This is an application to: [check all that apply]

- ☐ Construct a communication tower
- ☐ Locate an at-grade dish antenna(s) with a diameter exceeding two meters
- ☐ Locate an antenna or antenna array within a structure as an architectural element
- ☐ Install an additional antenna(s) or antenna array on an existing communications tower, sign structure, or municipal water tower
- ☒ Replace an antenna(s) or antenna array on an existing communications tower, sign structure, or municipal water tower
- ☐ Use the City's utility pole(s) (traffic signal poles, street light poles, and flag poles) associated with a distributed antenna system

Address or descriptive location of proposed device(s) [1]: 1800 BLK WESTMINSTER, NICHOLS HILLS, OK 7312

The following must be attached to this Application:

1. **Proof of authority.** Proof of applicant's authority to make this Application as to the property for which the special permit is desired by attaching a copy of the applicable deed evidencing applicant's ownership, a copy of the applicable lease evidencing applicant's leasehold interest, or an affidavit regarding ownership (a form for which is attached to this Application).

2. **Survey and site map.** Certified survey and detailed site map.

[1] If metes and bounds description, please attach.

Attachment: PC-2022-05 PACKET (5953 : T-Mobile - Special Permit Application)

3. **Project plans.** Detailed and certified project plans.

4. **Structural engineer review.** If a tower or architectural element is included, certified review by a licensed structural engineer.

5. **Scope of proposed work.** A narrative of the need for the proposed device(s) and proposed scope of work in non-technical language in sufficient detail for analysis by the City's Planning Commission and City Council.

6. **List of Owners of Abutting Property.** A report developed from the current records of the Oklahoma County Assessor and/or the Oklahoma County Clerk within the last 30 days, stating the names, addresses, and contact information for the owners of property abutting the proposed site. If the report is not certified by a licensed and bonded abstractor, Applicant will be responsible for the accuracy and completeness of the information in the report.

This Application will be considered officially submitted and filed only after it is examined by the Director of Public Works and the City Clerk and found to have met the applicable requirements of Sec. 50-127 and those set out in this Application and after the fee of $750 as required by Sec. 50-327 of the Nichols Hills City Code has been paid. At that time, the City Clerk will set the Application for hearing before the Nichols Hills Planning Commission and the Nichols Hills City Council. Applicant will be advised of the date and time for those hearings. It is highly recommended that applicant attend (or have a representative attend) the hearings and be prepared to answer questions.

The above statements in this Application and all attachments to it are true and correct.

Submitted and agreed to this 14 day of July, 2022.

Signature: Brittany Manley

Print applicant's full legal name: Brittany Manley

Print signatory party's title if applicant is a legal entity: Brittany Manley, Branch Communications, LLC, an agent on behalf of T-Mobile Central, LLC

Attachment: PC-2022-05 PACKET (5953 : T-Mobile - Special Permit Application)

Form of affidavit regarding ownership

Affidavit

STATE OF _____

COUNTY OF _____

[Full legal name], being first duly sworn, stated:

1. My name is ***[full legal name]***. My address is ***[full address]***. I am over the age of 18. I am a resident of the State of ***[state]***. I have personal knowledge of the matters stated in this Affidavit.

2. I am the applicant for a special permit for a communication device pursuant to the Nichols Hills City Code.

3. I am the current and legal owner of the property in the City of Nichols Hills with the address of ***[insert address]*** and more particularly described as:

[Insert legal description]

4. This address and legal description accurately describe the property for which the special permit for a communication device is requested.

I declare to the best of my knowledge and belief that the information in this Affidavit is true, correct, and complete.

Executed this _____ day of _____, 202___.

_____
[Full legal name]

Notary Acknowledgment

Subscribed and sworn to before me this _____ day of _____, 202___.

_____
Notary Public

My Commission Expires: _____
Comm. No. _____

This conveyance was approved on the _____ day of _____, 202___, by the City Council of the City of Nichols Hills, Oklahoma, pursuant to the Nichols Hills Subdivision Regulations as adopted by the Nichols Hills City Code.

By: _____
Printed name: _____
Title: _____

Attachment: PC-2022-05 PACKET (5953 : T-Mobile - Special Permit Application)

Return To:
Joyce Cobb
Sprint Spectrum
515 Central Park Drive #408
Oklahoma City, OK 73105

ORIGINAL 5.d.a

BOOK 6910 PAGE 0649

AGREEMENT

This AGREEMENT made this 12th day of March, 1996 by and between THE CITY OF NICHOLS HILLS and NICHOLS HILLS MUNICIPAL AUTHORITY, a Municipal Trust, hereinafter called the LESSOR, and Sprint Spectrum, L.P., a Delaware Limited Partnership, hereinafter called LESSEE.

WHEREAS, the LESSOR is the owner of a water tower located at the northeast corner of the intersection of Westminster Place and Greystone Avenue in Nichols Hills, Oklahoma, known commonly as the Nichols Hills / Westminster Water Tower and more fully described in Exhibit "A" attached hereto and made a part hereof, and

WHEREAS, LESSEE desires to lease antenna and equipment space inside and on said water tower and a site on which to construct a 7' x 16' concrete pad, which lease space is more fully described on Exhibit "B", attached hereto.

NOW THEREFORE, in and for the covenants, conditions, agreements and rents hereinafter set forth, and other good and valuable consideration, the adequacy of which is hereby acknowledged, LESSOR hereby leases to LESSEE, and LESSEE takes from LESSOR, approximately 112 square feet, including access, located in what is known as the City of Nichols Hills Public Works compound and antenna space inside the entire top of the structure of the said water tower.

The equipment space and antenna space inside the water tower described above is hereinafter referred to as the "Leased Premises". In addition, LESSOR grants to LESSEE the right to construct the necessary conduit and/or duct space inside and/or on the tower, for electrical wiring, telephone lines, and coaxial cable, pipes, tubes and appurtenances thereto, all of which are required by LESSEE as an integral part of its mobile communication facility. LESSEE shall be allowed to install, operate, maintain, replace and remove its communications equipment, and related cables, wires, conduit, antennas, air conditioning equipment, and other appurtenances as it may from time to time require. Although such equipment and appurtenances may become fixtures, they shall be and shall remain the property of LESSEE and LESSEE shall have the right to remove all of them at the expiration or termination of this Lease.

DOC NUMBER 96083691
BOOK 6910
PAGES 649 - 657
TIME 3:32:21
FEE 24.0
06/19/1996
Jack D. Graham - Ac
Oklahoma County Cle
RECORDED AND FILED

ARTICLE I

The initial term of this agreement shall be five (5) years, commencing on the first day of April, 1996, and extending through the 31st day of March, 2001. This Agreement shall be automatically renewed for four (4) additional terms of five (5) years each, unless Lessee provides Lessor with written notice of intention not to renew not less than ninety (90) days prior to the expiration of the then-current five-year term. Notwithstanding the foregoing, either party may terminate this Agreement at any time upon twelve (12) months prior written notice to the other party.

The basic annual rental rate payable by Lessee to Lessor shall be Six Thousand Dollars ($6,000.00). The rentals payable hereunder shall be paid annually on or before the first day of April of each year. Receipt of the rental for the first year of the lease term is hereby acknowledged by Lessor.

The annual rental payments to be made by Lessee to Lessor hereunder shall be adjusted at the end of each five (5) year period throughout the term of this agreement in accordance with the increase or decrease in the Consumer Price Index for All Urban Consumers ("CPI-U"), U.S. City Average, published by the department of Labor, Bureau of Labor Statistics, using for comparison the latest monthly CPI-U published during the five-year period then ending and the CPI-U for the

Attachment: PC-2022-05 PACKET (5953 : T-Mobile - Special Permit Application)

ClibPDF - www.fastio.com

month five (5) years previous to such latest monthly CPI-U. However, in no case shall the annual rental rate drop below Six Thousand Dollars ($6,000.00).

ARTICLE II

LESSOR shall permit the local electric and telephone utility companies providing services to LESSEE to extend their lines and facilities over, across and if necessary into LESSOR's property for such purposes.

LESSEE shall have a separate power meter installed for its electric service and LESSEE shall pay all costs related to said electric service.

ARTICLE III

LESSEE agrees that it will operate its equipment in a manner which will not interfere with LESSOR's existing communications systems or the existing equipment of any other tenant sharing the use of this locations. Should such harmful interference be identified as being caused by LESSEE's equipment, LESSEE shall immediately take every reasonable step to mitigate and eliminate said interference. LESSOR shall require that all future radio operators desiring to use this location will first coordinate with LESSEE to insure that their frequencies and antenna locations will be compatible with LESSEE'S so as to prevent such harmful interference. LESSOR further agrees not to permit other cellular telephone operators, other than LESSEE, to place or operate their equipment on the property or premises during the Term of this Agreement or any extension thereof.

If the City Manager or City Council of LESSOR shall reasonably determine that any such harmful interference caused by LESSEE's equipment adversely affects the ability of the police, the fire department or any other department or agency furnishing emergency services to carry out their duties and thereby endangers the health, safety and welfare of the public, LESSEE shall discontinue the use of its equipment until the interferences has been eliminated.

ARTICLE IV

It is understood and agreed that LESSEE's ability to use the Leased Premises is contingent upon its obtaining, either before or after the effective date of this Lease Agreement, all of the certificates, permits, and other approvals that may be required by any federal, state or local authorities. LESSEE shall make due and timely application for all such necessary certificates and approvals, and shall take no action which would adversely affect the status of the Leased Premises with respect to the proposed use there by LESSEE. In the event that any of such applications is finally rejected or any certificate, permit, license or approval issued to LESSEE is canceled or otherwise withdrawn or terminated by governmental authority so that LESSEE in its sole discretion will be unable to use the Lease Premises for its specified purposes, the LESSEE shall have the right to terminate this Agreement. Notice of said termination shall be given to the LESSOR in writing by certified mail. All rental paid for the lease of the property to said termination date shall be retained by the LESSOR. Upon such termination, this Agreement shall become null and void, and the parties shall have no further obligations, including the payment of money, to each other.

Attachment: PC-2022-05 PACKET (5953 : T-Mobile - Special Permit Application)

ClibPDF - www.fastio.com

ARTICLE V

LESSEE shall indemnify LESSOR and hold LESSOR harmless against any claim of liability or loss from personal injury or property damage, which may arise out of LESSEE's negligence or willful misconduct in connection with the Leased Premises, excepting, however, such claims or damages as may be attributable in whole or in part to the acts or omissions of the LESSOR, or its agents, servants or contractors.

ARTICLE VI

LESSEE shall install its equipment and antennas approximately as shown on Exhibit "B".

The location of the equipment and property to be constructed and installed on the Leased Premises and on the water tower and LESSEE's use of said premises and water tower shall in no way interfere with the LESSOR's use thereof and the location of such equipment and property shall be approved by the City Manager of the City of Nichols Hills before being installed or constructed by LESSEE.

LESSEE shall at its expense complete all make ready work and install its equipment and antennas in accordance with plans and specifications prepared by LESSEE and submitted to LESSOR for approval. LESSOR shall have ten (10) days to review said construction plans and approve them, or in the alternative, to advise LESSEE of necessary changes. If LESSOR fails for any reason to approve said plans within a reasonable period of time, in the sole judgment of LESSEE, then LESSEE may at its option terminate this Agreement. LESSEE shall not commence construction until said approval has been received from LESSOR. LESSEE further agrees to comply with all applicable rules and regulations of the Federal Communications Commission and all applicable local building and electrical codes.

LESSEE shall, at its expense, repair all damages to LESSOR's water tower which are a direct result of LESSEE'S activities. If LESSEE fails to make such repairs within fifteen (15) working days after the damage occurs, LESSOR shall have the right to make all necessary and reasonable repairs and LESSEE shall reimburse LESSOR for its reasonable expense within three (3) days of LESSOR presenting to LESSEE a statement showing the cost of such repairs.

LESSEE represents and agrees that the installation and operation of its property and equipment shall not cause damage of any kind to LESSOR's water tower structure and that LESSEE shall in no way interfere with the use, repair and/or maintenance of such tower by LESSOR.

ARTICLE VII

LESSEE will procure and maintain a public liability policy, with limits of $1,000,000.00 for bodily injury, $1,000,000.00 for property damage, $2,000,000.00 aggregate, with a certificate of insurance to be furnished to LESSOR within thirty (30) days of written request. Such policy will provide that cancellation will not occur without at least fifteen (15) days prior written notice to LESSOR.

Attachment: PC-2022-05 PACKET (5953 : T-Mobile - Special Permit Application)

ClibPDF - www.fastio.com

ARTICLE VIII

LESSEE shall not be deemed to have abandoned the Leased Premises even though LESSEE may cease using the communications facilities for a period of time so long as LESSEE continues to pay all rental.

ARTICLE IX

If any portion of said water tower or equipment building pad site forming a part of the Leased Premises is destroyed or becomes damaged by fire, wind, water or other natural disaster not caused by or arising from LESSEE's gross negligence or willful misconduct so as to render the Leased Premises, in the sole judgment of the LESSEE, unfit in whole or in part for occupancy or use by the LESSEE, LESSOR may restore or cause to be restored the water tower and equipment building pad site within a reasonable period of time not to exceed sixty (60) days after the occurrence of said damage or destruction. If repairs are not made by LESSOR withing sixty (60) days of the occurrence of said damage or destruction, LESSEE shall have the option of terminating this Lease.

ARTICLE X

LESSEE shall have full and free access to LESSEE's equipment and antennas twenty-four (24) hours per day, seven (7) days a week, provided that during any period of time when maintenance, repair or renovations to the water tower and the adjacent premises are in progress LESSEE shall have access to its equipment and antennas upon notice to LESSOR and will coordinate said operations with LESSOR.

LESSEE shall have access to the tower and the area around the tower, at reasonable times which shall not interfere with the maintenance or use of said tower and adjacent area by LESSOR, for the purpose of installing LESSEE's equipment and constructing its facilities. Once installations are made, LESSEE shall have reasonable access to the area for the purpose of maintenance of equipment on the tower and in the building.

ARTICLE XI

Notwithstanding anything to the contrary contained herein, LESSOR's prior written consent shall not be required, nor shall LESSOR have the right to cancel this Lease if LESSEE assigns or subleases, this Agreement or any interest herein to any corporation, partnership or other entity which (i) is controlled by, controlling or under common control with LESSEE, or (ii) shall merge or consolidate with or into LESSEE, or (iii) shall succeed to all or substantially all the assets, property and business of LESSEE.

ARTICLE XII

Should LESSEE fail to pay the rental hereinabove specified when the same shall become due and payable, or should LESSEE attempt to use the Leased Premises for any purpose other than that described herein above, or should the LESSEE attempt to assign or sublet this Lease without prior written consent of the LESSOR, except as provided for above, or should LESSEE in any way default in its performance of any of the conditions of this Lease, LESSOR may, at its option, thereupon declare this Lease terminated, provided, however, LESSOR shall have first given LESSEE notice in writing of said default. Upon receipt of such notice, LESSEE shall have thirty (30) days to

Attachment: PC-2022-05 PACKET (5953 : T-Mobile - Special Permit Application)

ClibPDF - www.fastio.com

correct the condition or conditions and bring same into compliance with the terms of this Lease. If said conditions of default persist after thirty (30) days of notice thereof by LESSOR to LESSEE, then LESSOR may declare this Lease terminated. Upon written notice of said termination to LESSEE, LESSOR shall be entitled to possession of the above described Lease Premises; provided, however, that any such termination shall not relieve LESSEE of its obligations to pay any rental which may be due and payable to the date of said termination.

ARTICLE XIII

Any notice or demand made pursuant to this Agreement shall be sufficiently given if made by certified mail, in a sealed envelope, postage prepaid, and addressed as shown below:

LESSEE: Sprint Spectrum
Attn.: Bob Giguiere
515 Central Park Dr., Suite 408
Oklahoma City, OK 73105

With a copy to:

Business Law Gruop
4717 Grand Avenue, Fifth Floor, MAILSTOP MOKCME0101
Kansas City, MO 64112

LESSOR: City of Nichols Hills
Attn.: City clerk
6407 Avondale
Nichols Hills, Oklahoma 73116
Tax ID: 73-6005346

Any such notice or demand shall be deemed to have been given or made at the time it is deposited in the United States Mail. LESSOR or LESSEE may from time to time designate any other address for this purpose by written notice to the other party.

ARTICLE XIV

LESSOR warrants that it has full right and power to execute and perform this Lease, and to grant the estate demised herein.

ARTICLE XV

Subject to the other terms of this Lease, LESSOR covenants that LESSEE shall, and may peacefully have, hold and enjoy the Leased Premises for the Lease Term free of any claims by any party claiming by, through or under LESSOR, provided that LESSEE pays the rent to be paid to LESSOR under this Agreement and performs all LESSEE's covenants and agreements herein contained.

ARTICLE XVI

Should LESSOR fail to perform any of its obligations hereunder, LESSEE may (but shall not be obligated to), enter upon the Leased Premises and perform all or any part of such obligations. LESSEE may deduct the cost of such performance from subsequent rental payments. No action taken

Attachment: PC-2022-05 PACKET (5953 : T-Mobile - Special Permit Application)

ClibPDF - www.fastio.com

by LESSEE under this Section shall relieve LESSOR from any of its obligations under this Agreement or from any consequences or liabilities arising from the failure to perform such obligations.

ARTICLE XVII

LESSEE upon termination of this Agreement, shall within a reasonable period, remove its personal property and restore the Leased Premises as nearly as reasonably possible to its original condition, reasonable wear and tear expected.

ARTICLE XVIII

Any sale by the LESSOR of all or part of the Leased Premises to a purchaser other than LESSEE shall be under and subject to this Lease Agreement and LESSEE's rights hereunder.

ARTICLE XIX

This Agreement shall extend to and bind heirs, executors, administrators, successors and assigns of the parties hereto.

ARTICLE XX

At LESSOR's option, this Agreement shall be subordinate to any mortgage by LESSOR which from time to time may encumber all or part of the Leased Premises; provided, however, every such mortgage shall recognize the validity of this Agreement in the event of a foreclosure of LESSOR's interest and also LESSEE's right to remain in occupancy of and have access to the Leased Premises as long as LESSEE is not in default of this Agreement. LESSEE shall execute whatever instruments may reasonably be required to evidence this subordination clause.

ARTICLE XXI

This Lease Agreement and the performance thereof shall be governed, interpreted, construed, and regulated by the laws of the State of Oklahoma, and the parties hereto agree to the venue and personal jurisdiction of these courts.

ARTICLE XXII

The parties hereto declare that they have read and do understand each and every term, condition and covenant contained in this Agreement and in any document incorporated by reference. This lease includes the entire Agreement between the parties relating hereto and supersedes all prior or contemporaneous negotiations, commitments, representation, writings and/or oral understandings or Agreement. The parties signed this Agreement for the consideration herein expressed. Any addition to, variation or modification of this Agreement shall be void and ineffective unless in writing signed by the parties hereto.

ARTICLE XXIII

Attachment: PC-2022-05 PACKET (5953 : T-Mobile - Special Permit Application)

ClibPDF - www.fastio.com

LESSEE represents that it is a Limited Partnership in good standing in the State of Delaware and qualified to do business as a Foreign Limited Partnership in the State of Oklahoma:

ARTICLE XXIV

LESSEE shall not have exclusive use or possession of any portion of the property and premises upon which the LESSOR's water tower and other facilities are located, except the equipment shelter to be constructed and installed by LESSEE, and LESSEE's rights hereunder shall be subject and subordinate to LESSOR's right to use and occupy said property and premises for any municipal purpose or purposes, so long as LESSOR's use does not unreasonably interfere with LESSEE's use hereunder.

IN WITNESS WHEREOF, the Parties hereto have duly executed this instrument the day and year first above written.

LESSOR:

[SEAL]

ATTEST:

Secretary

NICHOLS HILLS MUNICIPAL AUTHORITY

By: _____, Chairman

LESSOR:

[SEAL]

ATTEST:

City Clerk

CITY OF NICHOLS HILLS

By: _____, ~~Major~~ MAYOR

LESSEE:

[SEAL]

ATTEST:

Secretary

Alice Ann Johnson

SPRINT SPECTRUM, L.P.

By: ROBERT C. GRIFFITHS, DIRECTOR

Attachment: PC-2022-05 PACKET (5953 : T-Mobile - Special Permit Application)

ClibPDF - www.fastio.com

Version 2.0

12-18-95

EXHIBIT A

Site Name Nichols Hills Water Tower

Site Description

Site I. D. OKC3015

Site situated in the City of Nichols Hills, *County of* Oklahoma, *State of* Oklahoma
commonly described as follows:

Legal Description: All of Lots 24 and 25 in Block 108 in plat of Blocks 106 to 109 inclusive and Blocks 112 and 113, WILSHIRE SECTION, an addition in Oklahoma County, Oklahoma, according to the recorded plat thereof.

Owner Initials _____

SSLP Initials _____

Attachment: PC-2022-05 PACKET (5953 : T-Mobile - Special Permit Application)

ClibPDF - www.fastio.com

Version 2.0

12-18-95

EXHIBIT B

Site Name Nichols Hills Water Tower

Site Description

Site I. D. OKC3015

Site situated in the City of Nichols Hills, County of Oklahoma, State of Oklahoma commonly described as follows:

Sketch of Site:

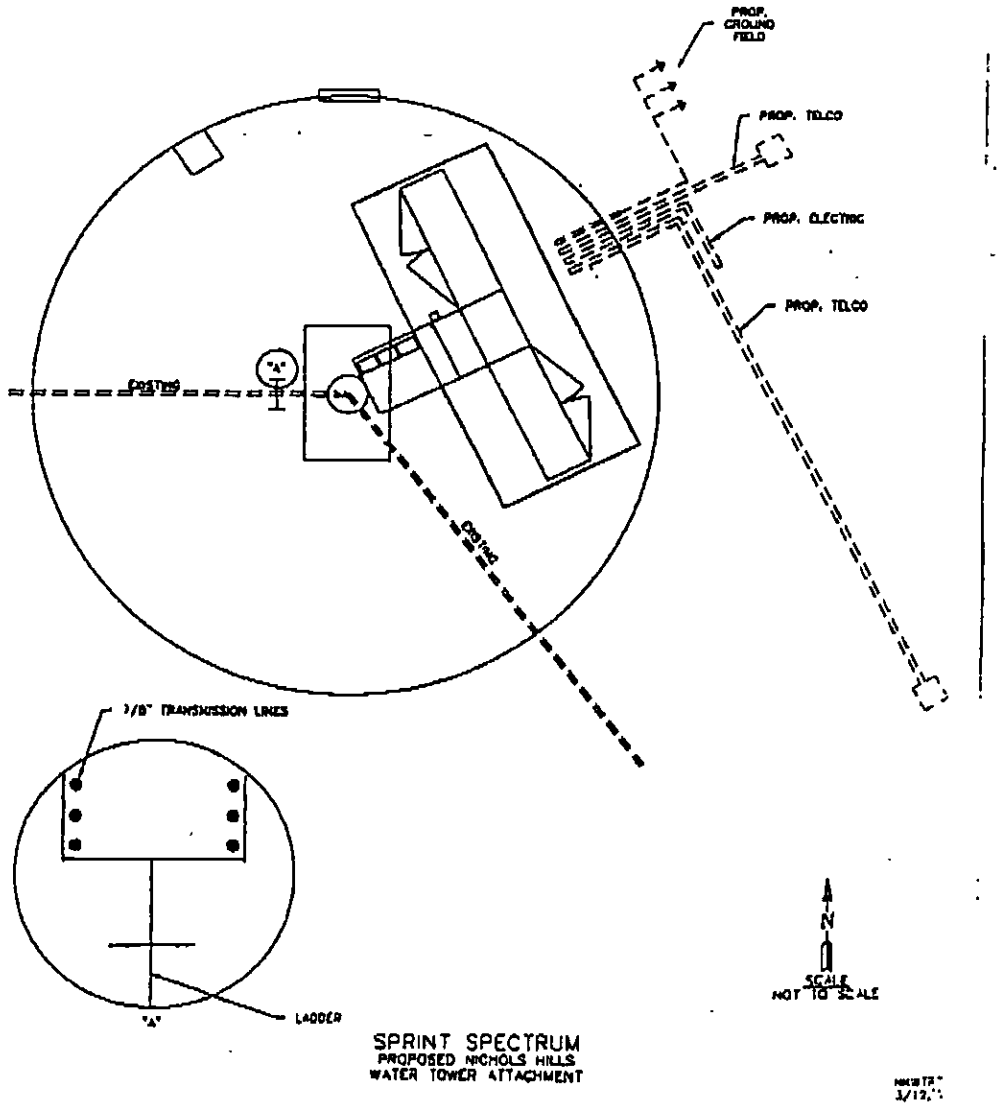

Owner Initiels _____

SSLP Initials _____

Note: Owner and SSLP may, at SSLP's option, replace this Exhibit with an exhibit setting forth the legal description of the property on which the Site is located and/or an as-built drawing depicting the Site.

*[Use this Exhibit A for PCS Site Agreement, Memorandum of PCS Site Agreement, Option Agreement and Memorandum of Option Agreement.]

Attachment: PC-2022-05 PACKET (5953 : T-Mobile - Special Permit Application)

ClibPDF - www.fastio.com

NOTICE TO PROCEED

Site ID No. OK03XC315 **Date** 3-1-95

Site Name Nichols Hills Water Tower
Street 1800 Block of Westminister
City Nichols Hills State OK Zip
County OK Parcel No.

Type of Structure x Tower(Guyed Self Supporter Monopole) Building
Structure Height Latitude
Required Build Height Longitude
Ground Elevation AMSL USGS Map

Dimensions of Site Access From
Present Use

Directions to Site

Description of Site All of Lots 24 & 25 in Block 108 in plat of Blocks 106 to 109 inclusive and Blocks 112 & 113, WILSHIRE SECTION, an addition to Oklahoma County, Oklahoma, according to the recorded plat thereof

Owner City of Nichols Hills
Street 6407 Avondale Dr City Nichols Hills
State OK Zip 73116-6481 Telephone 843-6637

Contact Russ Fields, Title Public Works Director
Street 6407 Avondale Dr City Nichols Hills
State OK Zip 73116 Telephone 843-5222

REQUEST FOR:

Feasibility Study	Requested		Completed	
Survey	Requested		Completed	
Site Walk	Requested		Completed	

Site Acquisition Specialist Charlie Sherwood Date

Approved Date
Capital Land Services, Inc.

Approved Date
Sprint Spectrum L.P.

Attachment: PC-2022-05 PACKET (5953 : T-Mobile - Special Permit Application)

ClibPDF - www.fastio.com

CITY OF NICHOLS HILLS

Public Works Department - Code Division
Nichols Hills, Oklahoma 73116 • Phone (405) 843-5315

Nº 20731

Date 3/25 19 96

Received Of Sprint Telecommunications

Six thousand and no/100 Dollars $ 6000/00

How Paid Cash _____ Ck ✓

Lease - Apr. 1996 -

Misc

By Margaret Peterson

Attachment: PC-2022-05 PACKET (5953 : T-Mobile - Special Permit Application)

ClibPDF - www.fastio.com

NOTICE TO PROCEED

Site ID No. OK03XC315 Date 3-1-95

Site Name Nichols Hills Water Tower
Street 1800 Block of Westminister
City Nichols Hills State OK Zip
County OK Parcel No.

Type of Structure x Tower(Guyed Self Supporter Monopole) Building
Structure Height Latitude
Required Build Height Longitude
Ground Elevation AMSL USGS Map

Dimensions of Site Access From
Present Use

Directions to Site

Description of Site All of Lots 24 & 25 in Block 108 in plat of Blocks 106 to 109 inclusive and Blocks 112 & 113, WILSHIRE SECTION, an addition to Oklahoma County, Oklahoma, according to the recorded plat thereof

Owner City of Nichols Hills
Street 6407 Avondale Dr City Nichols Hills
State OK Zip 73116-6481 Telephone 843-6637

Contact Russ Fields, Title Public Works Director
Street 6407 Avondale Dr City Nichols Hills
State OK Zip 73116 Telephone 843-5222

REQUEST FOR:

Feasibility Study	Requested		Completed	
Survey	Requested		Completed	
Site Walk	Requested		Completed	

Site Acquisition Specialist Charlie Sherwood Date

Approved Date
Capital Land Services, Inc.

Approved Date
Sprint Spectrum L.P.

Attachment: PC-2022-05 PACKET (5953 : T-Mobile - Special Permit Application)

ClibPDF - www.fastio.com

TOWER LOCATION CERTIFICATE

I, Melfred R. Loyall, Jr., a Registered Land Surveyor, hereby certify that this Tower Location Survey was prepared for Sprint Spectrum, Inc., for the purposes of permitting and constructing a tower located on the following described property:

SITE: OKC-3015A
Nichlos Hills Water Tower Located in the 1800 Block of Westminister, Greystone & Westminister (NE Corner), Oklahoma City, Oklahoma.

I further certify that the following is an accurate location for the proposed tower based on this survey:

Latitude:	35°33'31.146646"
Longitude:	97°33'28.907664"
Elevation of Ground:	1218.68' (Concrete Pad as Surveyed)
Heigth of Water Tower:	129.52 feet (Per City Drawings)
Elevation Top of Tower:	1348.20 (Calculated)
Horizontal Datum:	NAD 83
Vertical Datum:	NAVD 88

I further certify that the information contained herein is true and correct to the best of my knowledge and belief.

Melfred Roy Loyall, Jr., OK. Reg. #1317

REGISTERED LAND SURVEYOR
MELFRED ROY LOYALL JR
LS 1317

Prepared by: MRL LAND SURVEYING CO.
P.O. BOX 391
203 N. BICKFORD, SUITE 2
EL RENO, OK., 73036
(405) 262-0249

C:\CCSC.DOC\TEXT\CERTIFIC\30030065.WPD

Attachment: PC-2022-05 PACKET (5953 : T-Mobile - Special Permit Application)

ClibPDF - www.fastio.com

Sprint PCS Lease/Option Check List

This document is to be completed and attached to each Lease Agreement prior to submission to SPCS Director for signature. A copy of the Legal Review of the Lease and Title report are also required attachments. Please complete each portion of this Check List completely, sign, and place original in the Site Permanent File after appropriate approvals.

Site Information

Cascade Number: OKO3XC315 Site ID: 315 Site Name: Nichols HILLS PA#:
Site Address: 1009 NW 75th City/County: Oklahoma City 73116
Lease Area Roof Top Tower Replacement Existing Tower New Build X Add'tnl Grround Space
Final RF Rank: 1 Capacity Expansion Fill-in X IOS Test Project
This is an Option Agreement ☐ Final Lease X

Landlord Information

Landlord City of Nichols Hills Contact/Number: (405) 843-5222
Address: 6407 Avondale Drive City: Nichols Hills City St: OK Zip: 73116

Terms		Add'tnl Space	
Initial Term:	1(yrs.)	1(yrs.)	Finance Approval Required if any of the following checked positive:
Renewal Terms:	0	1	
Total Term:	0	0yrs.	☐ Non-Standard Lease
Commencement Date:	9/1/96	9/1/99	☐ Transfer of Ownership
			☐ Upfront or Irregular Payments Scheduled
Binder Amount:	0	0	☐ Monthly Rent is greater than $2000
Monthly Lease:	$500	$500.00	☐ Build to Suit Lease
First Year Lease Amount:	$6000.00 Esc.CPI	$6,000.00 Esc.CPI	☐ Non-cancellable term greater than 5 years
Total Lease Amount:	$150,000.000		

Conditions

Variation From Standard Lease: this is the exact same lease SSLP approved and executed with the city originally in 1996. The city will not accept any changes from this original document.

Describe Drop-in exhibits used : Exhibit "A" Legal Description, Exhibit "B" Site Description

x Unrestricted 24-7 access provided

Validation

Legal Review by: Bob Buchanan Title Status: OK

Approved: Karen L. Mitchell Date: 8/6/99
Sr. Property Specialist

Approved: [signature] Date: 8/6/99
Site Development Manager

Approved: [signature] Date: 8/6/99
Site Development Director

Approved: _____ Date: _____
Regional Finance Manager

Approved: _____ Date: _____
Kurt Bagwell - Vice President - Site Development

Approved: _____ Date: _____
Director, TS&NO Finance

Approved: _____ Date: _____
Keith Paglusch – Senior Vice President

Approved: _____ Date: _____
VP, Finance Operations

Revised 3/29/99

Attachment: PC-2022-05 PACKET (5953 : T-Mobile - Special Permit Application)

ClibPDF - www.fastio.com

H&S SURVEYING, INC.
"Surveying and Mapping Professionals"
201 N. Bickford
El Reno, OK. 73036
Ph: (405) 262-0249 Fax: (405) 262-5107

February 25, 2022
Branch Communications
1-A CERTIFICATION

Site ID No.: OK01538A
H&S No.: 3012.1206

This is to certify that the base of an existing tower lying within the subject site has the following geographic location within a 1-A tolerance.

Latitude & Longitude (to within Twenty (20) feet)

Latitude:	35°33'31.147"	(NAD 83)
Longitude:	97°33'28.910"	(NAD 83)

Base Elevation – (to within three (3) feet)

AMSL Elevation:	1217.91	(NAVD 88)
AMSL Elevation:	1217.46	(NGVD 29)

Top of Tower Elevation – (to within three (3) feet)

AMSL Elevation	1346.10	(NAVD 88)
AMSL Elevation	1345.65	(NGVD 29)

Existing Overall Height – (to within three (3) feet)

AMSL Elevation	1352.10	(NAVD 88)
AMSL Elevation	1351.65	(NGVD 29)

And that the above information is true and correct to within the given specifications.

Virgil C. Vaughn, OK. L.S # 405 — 02-25-22 Date
CA # 1600, Exp. 06/30/2023

REGISTERED LAND SURVEYOR
VIRGIL C. VAUGHN
L. S. 405
OKLAHOMA

Attachment: PC-2022-05 PACKET (5953 : T-Mobile - Special Permit Application)

SITE SURVEY OF A PROPOSED 12'X 20' LEASE SITE IN A PART OF THE NE/4 & SE/4 OF SECTION 31, T13N–R3W, OKLAHOMA COUNTY, OKLAHOMA

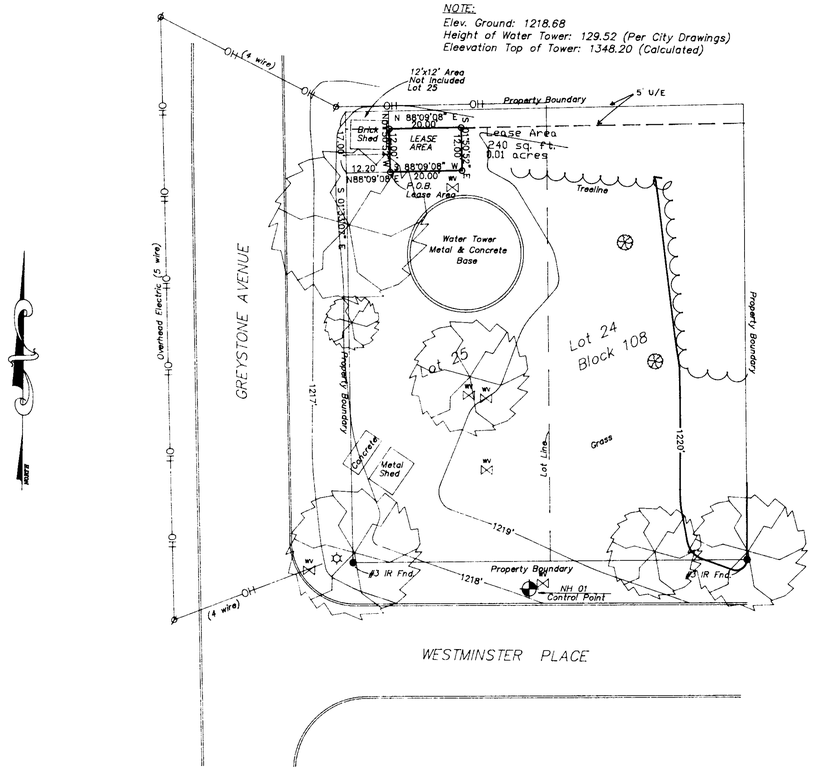

PROPERTY BOUNDARY DESCRIPTION

All of Lots 24 and 25 in Block 108 in plat of Blocks 106 and 108 inclusive and Blocks 112 and 113, WILSHIRE SECTION, an addition in Oklahoma County, Oklahoma, according to the recorded plat there of.

PROPOSED SITE LYING IN A PART OF THE NE/4 & SE/4 OF SECTION 31, T13N–R3W OKLAHOMA COUNTY, OKLAHOMA

A twelve feet (12.0) by twenty feet (20.0) feet site lying in and being a part of Lot Twenty–Five (25), Block One–Hundred Eight (108), replat of Blocks One–Hundred–Six (106) to One–Hundred–Nine (109), inclusive, Wilshire Section, an addition to Oklahoma City, Oklahoma County, Oklahoma according to the recorded plat thereof, said site being more particularly described as follows:
Commencing at the Northwest corner of said Lot 25; Thence S 01°33'07" E, along the West line of said Lot 25, a distance of 17.00 feet; Thence N88°09'08"E, a distance of 12.20 feet, to the true point and place of beginning, said point being the Southwest corner of said site; Thence N 01°50'52" W, a distance of 12.00 feet; Thence N 88°09'08" E, a distance of 20.00 feet; Thence S 01°50'52" E, a distance of 12.00 feet; Thence S88°09'08" W, a distance of 20.00 feet, to the point of beginning.
Containing an area of 240 square feet or 0.006 acres, more or less.

I, Kenneth E. Hauk, Oklahoma Registered Land Surveyor No. 1300, do hereby state that this survey represents a careful survey made by me or under my supervision and is true and correct to the best of my knowledge and belief.

Kenneth E. Hauk, OK RLS #1300

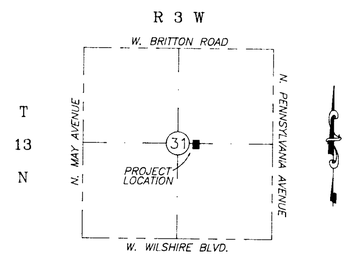

LOCATION MAP
SCALE: 1" = 2000'

GRAPHIC SCALE
20 0 10 20 40 120
(IN FEET)
1 inch = 20 ft.

LOCATION/DESCRIPTION	LATITUDE	LONGITUDE	NORTHING (FEET)	EASTING (FEET)	ELEVATION
NH 01 Control Point	35°24'44.158438"	103°54'16.906869"	203565.51445	209980.58230	1218.17'
NH 02 Control Point	35°33'29.792861"	97°33'11.622376"	203528.92548	2101393.21440	1212.86'
SE SITE	35°24'45.292987"	103°54'17.231962"	203681.65784	209960.6936	1218.93'
SW SITE	35°24'45.271605"	103°54'17.472527"	203681.01296	209940.70476	1218.74'
NW SITE	35°24'45.392768"	103°54'17.486000"	203693.00672	209940.31783	1218.85'
NE SITE	35°24'45.411150"	103°54'17.245426"	203693.65162	209960.30817	1218.91'

⊙ Denotes #3 Iron Rod Set

LEGEND
- LIGHT POLE (U/G ELEC)
- LIGHT POLE (O/H ELEC)
- POWER POLE
- GUY LINE
- OVERHEAD ELECTRIC
- U/G ELECTRIC
- WATER LINE
- WATER METER
- WATER VALVE
- FIRE HYDRANT
- GAS LINE
- GAS METER
- TELEPHONE LINE
- TELEPHONE RISER
- SANITARY SEWER MANHOLE
- SANITARY SEWER LINE
- STORM SEWER MANHOLE
- STORM SEWER LINE

NO.	REVISION	DATE	BY

SURVEYING & MAPPING BY:
MRL LAND SURVEYING CO.
CA 1600 (LS) EXPIRES: 6/30/97
203 N. BICKFORD, SUITE 2
EL RENO, OK. 405–262–0249

1800 Block of Westminister & Greystone (Nichols Hills, OKC)

Bearings Based on Geodetic North
Established: 3/20/96
Datum: NAD83

Boundary & Topographic Survey Of:
OKC–3015A
Nichols Hills , Oklahoma County, Oklahoma

PREPARED FOR:
SPRINT SPECTRUM L.P.
Oklahoma City, Oklahoma.

DATE: 5/9/96	SCALE: 1" = 20'
FIELD WORK: RM	SHEET 1 OF 1
OFFICE WORK: SDF	
CHK'D BY: MRL	JOB NO.: 3003.0065

Attachment: PC-2022-05 PACKET (5953 : T-Mobile - Special Permit Application)

ClibPDF - www.fastio.com

CONSTRUCTION NOTES

T-Mobile

SPRINT SITE NUMBER:

OK03XC315

T-MOBILE SITE NUMBER:

OK01538A

T-MOBILE PROJECT TYPE:
REPLACEMENT_CONSOLIDATION

APPROVAL SIGNATURE BLOCK

THE FOLLOWING PARTIES HAVE REVIEWED THESE DOCUMENTS.

ALL DOCUMENTS ARE SUBJECT TO REVISION BY THE LOCAL ZONING BUILDING DEPARTMENTS AND MAY IMPOSE CHANGES OR MODIFICATIONS.

SITE ACQUISITION (PRINT)	SITE ACQUISITION	☐ APPROVED ☐ REJECTED	DATE
RF ENGINEER (PRINT)	RF ENGINEER	☐ APPROVED ☐ REJECTED	DATE
CONSTRUCTION MANAGER (PRINT)	CONSTRUCTION MANAGER	☐ APPROVED ☐ REJECTED	DATE
OPERATIONS (PRINT)	OPERATIONS	☐ APPROVED ☐ REJECTED	DATE
PROJECT MANAGER (PRINT)	PROJECT MANAGER	☐ APPROVED ☐ REJECTED	DATE

Attachment: PC-2022-05 PACKET (5953 : T-Mobile - Special Permit Application)

T-Mobile

4533 ENTERPRISE DR OKLAHOMA CITY, OK 73128

T-MOBILE PROJECT TYPE: REPLACEMENT_CONSOLIDATION

T-MOBILE SITE NUMBER: **OK01538A**

T-MOBILE SITE NAME: **OK03XC315**

CITY OF NICHOLS HILLS SITE NUMBER: **N/A**

CITY OF NICHOLS HILLS SITE NAME: **N/A**

SITE ADDRESS: **1800 BLK WESTMINSTER**

NEW EQUIPMENT AND ANTENNAS ON: **EXISTING 124' WATER TANK**

RFDS VERSION: OK01538A_REPLACEMENT_1_03/16/2022

SITE INFORMATION

SITE TYPE: T–MOBILE PROJECT TYPE: REPLACEMENT_CONSOLIDATION

SITE NAME: OK03XC315

SITE NUMBER: OK01538A

SITE ADDRESS: 1800 BLK WESTMINSTER

COUNTY: OKLAHOMA COUNTY

JURISDICTION: CITY OF NICHOLS HILLS

OCCUPANCY TYPE: UNMANNED

A.D.A. COMPLIANCE: FACILITY IS UNMANNED AND NOT FOR HUMAN HABITATION.

APPLICANT: T–MOBILE
4533 ENTERPRISE DR
OKLAHOMA CITY, OK 73128
CUSTOMER SERVICE
800–318–9270

PROPERTY OWNER:
N/A
N/A

SITE COORDINATES (NAD 83):
LATITUDE: N. 35 33' 31.143" N
LONGITUDE: W. –97 33' 29.167" W

GROUND ELEVATION: 1214' (AMSL)

TOWER OWNER: CITY OF NICHOLS HILLS
SITE NAME: N/A
SITE NUMBER: N/A

DESIGNER:
BRANCH COMMUNICATIONS, LLC
7335 SOUTH LEWIS AVE. STE. 300
TULSA, OK. 74136
CONTACT: BRIAN HEIMBACH
PHONE: (918) 863–4601

ARCHITECT/ENGINEER:
BRANCH ENGINEERING, LLC.
7335 S. LEWIS AVE., SUITE 300
TULSA, OK. 74136
CONTACT: JEROD R DOTSON
PHONE: (918) 949–4551

TELEPHONE COMPANY:
N/A
N/A

NATURAL GAS:
ON FILE
ON FILE

POWER COMPANY:
OG&E
800–272–9741

VICINITY MAP

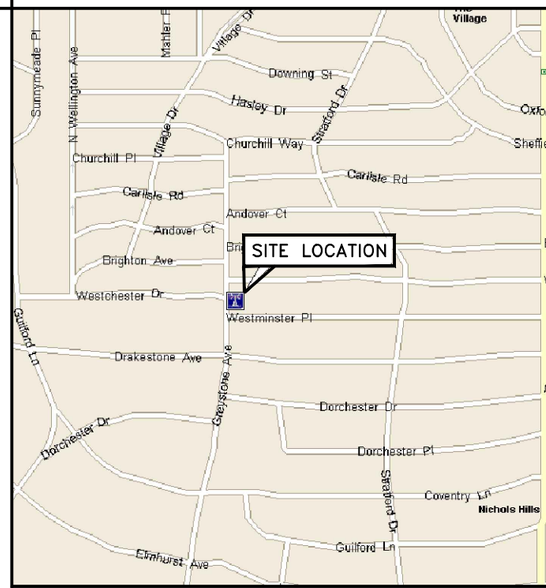

AERIAL MAP

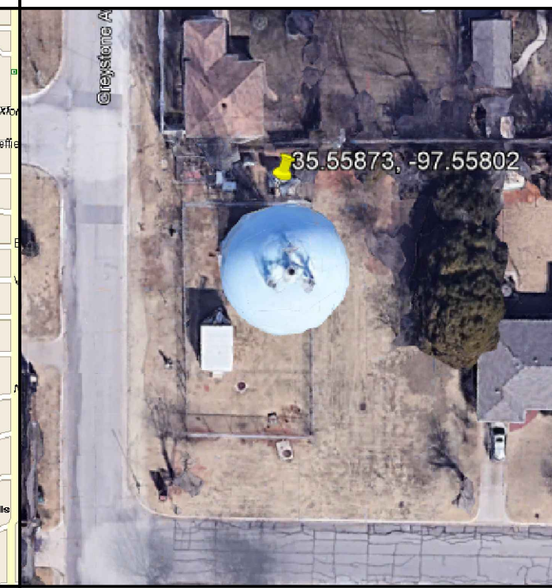

DRAWING INDEX

NO	DESCRIPTION
T1	TITLE SHEET
GN1	GENERAL NOTES
C1	OVERALL SITE PLAN
C1.1	LEASE LOCATION
C2	EXISTING ENLARGED SITE PLAN
C2.1	PROPOSED ENLARGED SITE PLAN
C3	TOWER ELEVATIONS
C4	EXISTING AND PROPOSED ANTENNA PLANS
C5	ANTENNA SCHEDULE
C6–C21	EQUIPMENT DETAILS
C22	GENERATOR SPECIFICATIONS
C23	ATS SPECIFICATIONS
E1	EQUIPMENT UTILITY PLAN
E2	ONE–LINE DIAGRAM AND DETAILS
G1	EQUIPMENT GROUNDING PLAN
G2	GROUNDING DETAILS
G3	GROUNDING DETAILS

QR CODE

DO NOT SCALE DRAWINGS

CONTRACTOR SHALL VERIFY ALL PLANS AND EXISTING DIMENSIONS AND CONDITIONS ON THE JOB SITE AND SHALL IMMEDIATELY NOTIFY THE ENGINEER IN WRITING OF ANY DISCREPANCIES BEFORE PROCEEDING WITH THE WORK OR BE RESPONSIBLE FOR SAME.

BUILDING/DWELLING CODE: IBC 2018
STRUCTURAL CODE: IBC 2018
PLUMBING CODE: IPC 2018
MECHANICAL CODE: IMC 2018
ELECTRIC CODE: NEC 2017
FIRE/LIFE SAFETY CODE: IBC 2018, IFC 2018

ONE CALL NUMBER

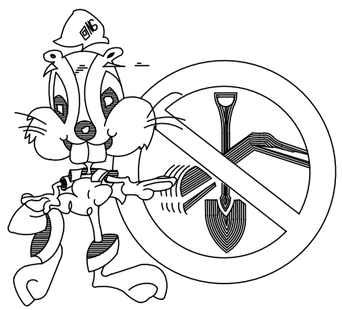

CALL OKIE
ONE CALL 811
(800) 522-6543
CALL 3 WORKING DAYS BEFORE YOU DIG!

SCOPE OF WORK

THE ENTIRE WORK AREA SHALL BE IDENTIFIED AND EXISTING CONDITION DOCUMENTED BY COMMENCEMENT. DOCUMENTATION SHALL CONSIST OF A WRITTEN AND PHOTOGRAPHIC REPORT.

THE SCOPE OF WORK CONSIST OF:

1. REMOVE EXISTING SPRINT EQUIPMENT
2. PROPOSED 48" X 10'–0" ICE BRIDGE CANOPY ABOVE NEW CABINETS
3. PROPOSED 48" X 5'–0" CANOPY EXTENSION
4. PROPOSED (2) FOOT ICE BRIDGE POST WITH H–FRAME
5. PROPOSED (1) HPL3 600AMP SSC
6. PROPOSED (1) LB3 LARGE BATTERY
7. INSTALL PROPOSED GENERAC RD048 DIESEL GENERATOR ON 5X10 GENERATOR PAD WITH CANOPY ABOVE
8. PROPOSED (6) T–MOBILE ANTENNAS (2 PER SECTOR, 6 TOTAL)
9. PROPOSED (6) AIRSCALE RADIO UNITS (2 PER SECTOR, 6 TOTAL)
10. INSTALL (2) NOKIA HCS 2.0 TRUNK 12#4AWG 24 SM FIBER PR WITH BREAKOUT, EQUIPMENT TO BE INSTALLED ON EXISTING 124' WATER TANK.
11. INSTALL (2) NOKIA HCS 2.0 TOWER JUNCTION BOXES ON PROPOSED H–FRAME WITH FIBER JUNCTION BOXES BELOW EACH.
12. PROPOSED VOLTAGE BOOSTER PER RFDS

VENDOR:
T-Mobile
4533 ENTERPRISE DR
OKLAHOMA CITY OK 73128

Branch COMMUNICATIONS
A SOLUTIONS PROVIDER
BRANCH COMMUNICATIONS
7335 SOUTH LEWIS AVE. STE. 300
TULSA, OKLAHOMA 74136
(918) 949–4551

PRODUCED BY:
Branch ENGINEERING LLC.
A SOLUTIONS PROVIDER
BRANCH ENGINEERING LLC
7335 SOUTH LEWIS AVE. STE. 300
TULSA, OKLAHOMA 74136
(918) 949–4551
COA. 8525 EXP. 06/30/2024

SITE NAME:
OK03XC315

SITE NUMBER:
OK01538A

SITE ADDRESS:
1800 BLK WESTMINSTER
NICHOLS HILLS OK 73120

ENGINEER:
LICENSED PROFESSIONAL ENGINEER
JEROD R DOTSON
27779
OKLAHOMA
7/14/2
PE # 27779 EXP. 12/31/2023

NO	DATE	DESCRIPTION	B
A	01/25/22	PRELIMINARY ISSUE	BI
B	02/18/22	PRELIMINARY ISSUE	BI
C	04/08/22	PRELIMINARY ISSUE	BI
0	06/03/22	CONSTRUCTION ISSUE	BI
1	07/14/22	CONSTRUCTION ISSUE	B

SHEET TITLE:
TITLE SHEET

SHEET NUMBER:	PROJECT #: OK01538A		REVISIO
T1	BY: BDH	CKD BY: BDH	1

T–Mobile OK Consolidation OK01538A–OK03XC315 021822.dwg – Sheet:T1 – User: Brian.Heimbach – Jul 14, 2022 – 2:39pm

Attachment: PC-2022-05 PACKET (5953 : T-Mobile - Special Permit Application)

GENERAL CONSTRUCTION NOTES:

1. UNLESS SHOWN OR NOTED OTHERWISE ON THE CONTRACT DRAWINGS, OR IN THE SPECIFICATIONS, THE FOLLOWING NOTES SHALL APPLY TO THE MATERIALS LISTED HEREIN, AND TO THE PROCEDURES TO BE USED ON THIS PROJECT.
2. GENERAL CONSTRUCTION, ELECTRICAL AND ANTENNA DRAWINGS ARE INTERRELATED IN PERFORMANCE OF THE WORK, EACH CONTRACTOR MUST REFER TO ALL DRAWINGS. ALL COORDINATION TO BE THE RESPONSIBILITY OF THE GENERAL CONTRACTOR.
3. DRAWING PROVIDED HERE ARE N.T.S. AND ARE INTENDED TO SHOW OUTLINE ONLY.
4. ALL DIMENSIONS, ELEVATIONS AND EXISTING CONDITIONS SHOWN OF THE DRAWINGS SHALL BE FIELD VERIFIED BY THE CONTRACTOR PRIOR TO BEGINNING ANY MATERIALS ORDERING., FABRICATION OR CONSTRUCTION WORK ON THIS PROJECT. CONTRACTOR SHALL NOT SCALE CONTRACT DRAWINGS IN LIEU OF FIELD VERIFICATIONS. ANY DISCREPANCIES SHALL BE IMMEDIATELY BROUGHT TO THE ATTENTION OF THE OWNER AND THE OWNER'S ENGINEER. THE DISCREPANCIES MUST BE RESOLVED BEFORE THE CONTRACTOR IS TO PROCEED WITH THE WORK, THE CONTRACT DOCUMENTS DO NOT INDICATE THE METHOD OF CONSTRUCTION, THE CONTRACTOR SHALL SUPERVISE AND DIRECT THE WORK AND SHALL BE SOLELY RESPONSIBLE FOR ALL CONSTRUCTION MEANS, METHODS, TECHNIQUES, SEQUENCES, EQUIPMENT. TOOLS, LABOR AND PROCEDURES. OBSERVATION VISITS TO THE SITE BY THE OWNER AND/OR ENGINEER SHALL NOT INCLUDE INSPECTION OF THE PROTECTIVE MEASURES OR THE PROCEDURES.
5. ALL BUILDING DIMENSIONS SHALL BE VERIFIED WITH THE PLANS (LATEST REVISION) PRIOR TO COMMENCING CONSTRUCTION. IF NEW SHELTER IS PROPOSED, CONTRACTOR MUST HAVE SHELTER MANUFACTURERS SHELTER DRAWINGS PRIOR TO CONSTRUCTION COMMENCEMENT. NOTIFY THE ENGINEER IMMEDIATELY IF ANY DISCREPANCIES ARE DISCOVERED. THE CONTRACTOR SHALL HAVE A SET OF APPROVED PLANS (SIGNED AND SEALED OR BUILDING OFFICIAL APPROVED)., LATEST REVISION AVAILABLE AT THE SITE AT ALL TIMES WHILE WORK IS BEING PERFORMED. A DESIGNATED RESPONSIBLE EMPLOYEE SHALL BE AVAILABLE FOR CONTACT BY GOVERNING AGENCY INSPECTORS, PROVIDE CONTACT INFORMATION TO PROJECT MANAGER.
6. PRIOR TO THE SUBMISSION OF BIDS, THE BIDDING CONTRACTOR SHALL VISIT THE CELL SITE TO FAMILIARIZE WITH THE EXISTING CONDITIONS AND TO CONFIRM THAT THE WORK CAN BE ACCOMPLISHED AS SHOWN ON THE CONSTRUCTION DRAWINGS. ANY DISCREPANCY FOUND SHALL BE BROUGHT TO THE ATTENTION OF THE ENGINEER.
7. THE CONTRACTOR OR BIDDER SHALL BEAR THE RESPONSIBILITY OF NOTIFYING (IN WRITING) OWNERS REPRESENTATIVE OF ANY CONFLICTS, ERRORS OR OMISSIONS PRIOR TO THE SUBMISSION OF CONTRACTORS'S PROPOSAL OR PERFORMANCE OF WORK.
8. ALL MATERIALS FURNISHED AND INSTALLED SHALL BE IN STRICT ACCORDANCE WITH ALL APPLICABLE CODES, REGULATIONS AND ORDINANCES. SUBCONTRACTOR SHALL ISSUE ALL APPROPRIATE NOTICES AND COMPLY WITH ALL LAWS, ORDINANCES, RULES, REGULATIONS AND LAWFUL ORDERS OF ANY PUBLIC AUTHORITY REGARDING THE PERFORMANCE OF THE WORK. ALL WORK CARRIED OUT SHALL COMPLY WITH ALL APPLICABLE MUNICIPAL AND UTILITY COMPANY SPECIFICATIONS AND LOCAL JURISDICTIONAL CODES, ORDINANCES AND APPLICABLE REGULATIONS.
9. IF THE SPECIFIED EQUIPMENT CAN NOT BE INSTALLED AS SHOWN ON THESE DRAWINGS, THE SUBCONTRACTOR SHALL PROPOSE AN ALTERNATIVE INSTALLATION FOR APPROVAL BY THE CONTRACTOR.
10. THE SUBCONTRACTOR SHALL INSTALL ALL EQUIPMENT AND MATERIALS IN ACCORDANCE WITH MANUFACTURER'S RECOMMENDATIONS UNLESS SPECIFICALLY STATED OTHERWISE.
11. ALL MATERIALS AND EQUIPMENT FURNISHED SHALL BE NEW AND OF SPECIFIED QUALITY, FREE FROM FAULTS AND DEFECTS AND IN CONFORMANCE WITH THE CONTRACT DOCUMENTS, ANY AND ALL SUBSTITUTIONS MUST BE PROPERLY APPROVED AND AUTHORIZED IN WRITING BY THE OWNER PRIOR TO INSTALLATION. THE CONTRACTOR SHALL FURNISH SATISFACTORY EVIDENCE AS TO THE KIND AND QUALITY OF THE MATERIALS AND EQUIPMENT BEING SUBSTITUTED.
12. THE CONTRACTOR SHALL VERIFY ALL EXISTING TOPOGRAPHY AN HORIZONTAL GEOMETRY AS INDICATED ON THESE DRAWINGS. THE CONTRACTOR IS TO ESTABLISH THE EXISTENCE AND LOCATION OF ALL UNDERGROUND UTILITIES AND SERVICES. CONTRACTOR IS TO MAINTAIN REQUIRED HORIZONTAL CLEARANCE FROM THE CENTERLINE OF EXISTING POWER LINES AS DETERMINED BY THE ELECTRICAL POWER COMPANY. IMMEDIATELY NOTIFY THE CONSTRUCTION MANAGER OF ANY DISCREPANCIES OR INTERFERENCE WHICH AFFECT THE WORK UNDER THIS CONTRACT.
13. FLAGGERS SHALL BE REQUIRED AS NEEDED IN RIGHT OF WAYS.
14. THE CONTRACTOR SHALL BE RESPONSIBLE FOR INITIATING, MAINTAINING AND SUPERVISING ALL SAFETY PRECAUTIONS AND PROGRAMS IN CONNECTION WITH THE WORK. THE CONTRACTOR IS RESPONSIBLE FOR INSURING THAT THIS PROJECT AND RELATED WORK COMPLIES WITH ALL APPLICABLE LOCAL, STATE AND FEDERAL AND OSHA SAFETY CODES AND REGULATIONS GOVERNING THIS WORK.
15. IT IS THE CONTRACTOR'S SOLE RESPONSIBILITY TO DETERMINE ERECTION PROCEDURE AND SEQUENCE TO INSURE THE SAFETY OF THE STRUCTURE AND IT'S COMPONENT PARTS DURING ERECTION AND/OR FIELD MODIFICATIONS, THIS INCLUDES, BUT IS NOT LIMITED TO THE ADDITION OF TEMPORARY BRACING, GUYS OR TIE DOWNS THAT MAY BE NECESSARY. SUCH MATERIAL SHALL BE REMOVED AND SHALL REMAIN THE PROPERTY OF THE CONTRACTOR AFTER THE COMPLETION OF THE PROJECT.
16. IF ANY FIELD CONDITIONS PRECLUDE COMPLIANCE WITH THE DRAWINGS & OR CONDITIONS SPECIFIED, THE CONTRACTOR SHALL IMMEDIATELY NOTIFY THE CONST. MGR & SHALL NOT PROCEED WITH ANY WORK THAT WOULD BE AFFECTED.

GENERAL CONSTRUCTION NOTES CONT:

17. ALL WORK PRESENTED ON THESE DRAWINGS MUST BE COMPLETED BY THE CONTRACTOR UNLESS NOTED OTHERWISE. THE CONTRACTOR MUST HAVE A MINIMUM OF 5 YEARS OF TELECOM EXPERIENCE IN THE PERFORMANCE OF WORK SIMILAR TO THAT DESCRIBED HEREIN. BY ACCEPTANCE THIS ASSIGNMENT, THE CONTRACTOR IS ATTESTING THAT THEY DO HAVE THE SUFFICIENT EXPERIENCE AND ABILITY, THAT THEY ARE PROPERLY REGISTERED TO DO THIS WORK IN THE STATE OF THIS PROJECT.
18. ALL HARDWARE MANUFACTURER'S ASSEMBLY INSTRUCTION SHALL BE FOLLOWED EXACTLY AND SHALL SUPERCEDE ANY CONFLICTING NOTES ENCLOSED HEREIN.
19. BILL OF MATERIALS AND PART NUMBERS LISTED ON CONSTRUCTION DRAWING ARE INTENDED TO AID CONTRACTOR.
20. CONTRACTOR SHALL VERIFY PARTS AND QUANTITIES WITH MANUFACTURER PRIOR TO BIDDING AND/OR ORDERING MATERIALS.
21. THE CONTRACTOR SHALL NOT PROCEED WITH CONSTRUCTION ON ANY ITEM NOT CLEARLY DEFINED BY THE CONSTRUCTION DRAWINGS/CONTRACT WITHOUT WRITTEN AUTHORIZATION FROM OWNER, OWNERS REPRESENTATIVE OR ENGINEER.
22. THE CONTRACTOR SHALL NOTIFY THE TOWER OWNERS REPRESENTATIVE WHERE A CONFLICT OCCURS ON ANY OF THE CONTRACT DOCUMENTS. THE CONTRACTOR IS NOT TO ORDER MATERIAL OR CONSTRUCT ANY PORTION OF THE WORK THAT IS IN CONFLICT UNTIL THAT CONFLICT IS RESOLVED BY TOWER OWNERS REPRESENTATIVE.
23. THE SUBCONTRACTOR SHALL PROTECT EXISTING IMPROVEMENTS, PAVEMENTS, CURBS, LANDSCAPING AND STRUCTURES. ANY DAMAGED PART SHALL BE REPAIRED AT SUBCONTRACTOR'S EXPENSE TO THE SATISFACTION OF THE OWNER.
24. CONTRACTOR SHALL LEGALLY AND PROPERLY DISPOSE OF ALL SCRAP MATERIALS SUCH AS COAXIAL CABLES AND OTHER ITEMS REMOVED FROM THE EXISTING FACILITY. ANTENNAS REMOVED SHALL BE RETURNED TO THE OWNER'S DESIGNATED LOCATION.
25. "KITTING LIST" SUPPLIED WITH THE BID PACKAGE IDENTIFIES ITEMS THAT WILL BE SUPPLIED BY CONTRACTOR. ITEMS NOT INCLUDED IN THE BILL OF MATERIALS AND KITTING LIST SHALL BE SUPPLIED BY SUBCONTRACTOR.
26. ALL MATERIALS AN WORKMANSHIP SHALL BE WARRANTED FOR ONE YEAR FROM ACCEPTANCE DATE.
27. 24 HOURS PRIOR TO THE BEGINNING OF ANY CONSTRUCTION, THE CONTRACTOR MUST NOTIFY THE APPLICABLE JURISDICTIONAL (STATE, COUNTY OR CITY) OFFICIAL.
28. SUBCONTRACTOR SHALL DETERMINE ACTUAL ROUTING OF CONDUIT, POWER AND T1 CABLES, GROUNDING CABLES AS SHOWN ON THE POWER, GROUNDING AND TELCO PLAN DRAWINGS.
29. LOCATION OF EQUIPMENT, CONDUITS AND DEVICES SHOWN ON THE DRAWINGS ARE APPROXIMATE AND SHALL BE COORDINATED WITH FIELD CONDITIONS PRIOR TO ROUGH IN.
30. ALL PERMITS THAT MUST BE OBTAINED ARE THE RESPONSIBILITY OF THE CONTRACTOR. THE CONTRACTOR WILL BE RESPONSIBLE FOR ABIDING BY ALL CONDITIONS AND REQUIREMENTS OF THE PERMITS.
31. ALL PERMITS THAT MUST BE OBTAINED ARE THE RESPONSIBILITY OF THE CONTRACTOR. THE CONTRACTOR WILL BE RESPONSIBLE FOR ABIDING BY ALL CONDITIONS AND REQUIREMENTS OF THE PERMITS.
32. ALL WORK SHALL BE IN ACCORDANCE WITH GOVERNING AUTHORITIES, CODES, REGULATIONS, INCLUDING OSHA, NCE, AISC, ACI AND ANSI/TIA/EIA-222.
33. THE CONTRACTOR SHALL TAKE ALL REASONABLE MEASURES TO PROTECT EXISTING STRUCTURES, UTILITIES, WALKWAYS, PAVEMENT AND OTHER FACILITIES FROM UNNECESSARY EXPOSURE TO DAMAGE; ALL NEW UNDERGROUND TRENCHING SHALL BE HAND DUG WHEN NECESSARY.
34. THE CONTRACTOR IS RESPONSIBLE FOR LOCATING ALL UTILITIES, PIPES, AND GROUND WIRES PRIOR TO COMMENCEMENT OF CONSTRUCTION ACTIVITIES. EXCAVATION IS TO BE CONDUCTED IN SUCH A MANNER THAT NO DAMAGE TO SAID FACILITIES IS LIKELY TO OCCUR.
35. THE CONTRACTOR WILL BE HELD RESPONSIBLE FOR THE SAFETY AND IF NECESSARY THE REPAIR OF ALL PUBLIC UTILITIES SERVICES SUCH AS GAS, TELEPHONE, ELECTRIC CABLE AND WATER.
36. DO NOT INTERRUPT SERVICE TO ADJACENT STRUCTURES OR FACILITIES WITHOUT WRITTEN PERMISSION FROM THE PROPERTY OWNER.
37. EROSION CONTROL MEASURES SUCH AS SILT FENCING AND/OR HAY BALES SHALL BE UTILIZED TO PREVENT AND DEBRIS FROM CONTAMINATING ADJACENT PROPERTIES, ROADS AND AREAS.
38. COMMENCEMENT OF CONSTRUCTION SHALL BEGIN ONLY WITH THE WRITTEN APPROVAL OF THE OWNER OR OWNERS REPRESENTATIVE; ALL CONSTRUCTION AND MATERIAL ORDERING (WITH EXCEPTION OF THE TOWER) SHALL BE DONE WITH DRAWINGS LABELED ISSUED FOR CONSTRUCTION.
39. NO DUMPING SOILS ON SITE OR LEASE AREA. DEBRIS MUST BE HAULED OFF. NO BURNING OF TRASH ON SITE.
40. THE CONTRACTOR IS CAUTIONED THAT MINOR OMISSIONS OR ERRORS IN THE DRAWINGS SHALL NOT EXCUSE THE CONTRACTOR FORM COMPLETING THE WORK IN ACCORDANCE WITH THE INTENT OF THE DRAWINGS, SO AS TO RESULT IN A SYSTEM THAT FUNCTIONS FULL AS INTENDED BY THE DRAWINGS.

GENERAL CONSTRUCTION NOTES CONT:

41. ALL SAFETY HAZARDS MUST BE MARKED WITH WARNING TAPE OR SAFETY FENCE.
42. NEW BUILD CONTRACT WILL INCLUDE LEVELED BUILDING PAD, ACCESS ROAD AND ENTRANCE GATES, AND EROSION CONTROL.
43. ANY ACCIDENTS ON SITE MUST BE REPORTED TO CLIENT WITHIN 2 HOURS OF THE EVENT.
44. ACCESS TO THE PROPOSED WORK SITE MAY BE RESTRICTED. THE CONTRACTOR SHALL COORDINATE INTENDED CONSTRUCTION ACTIVITY, INCLUDING WORK SCHEDULE AND MATERIALS ACCESS, WITH THE RESIDENT LEASING AGENT FOR APPROVAL.
45. THE SUBCONTRACTOR SHALL INSTALL OWNER OR ANY JURISDICTION AUTHORITY SIGNAGE, WARNING OR HAZARD AS REQUIRED.
46. SEED AND MULCH ALL DISTURBED AREAS NOT COVERED BY OTHER MATERIALS IN ACCORDANCE WITH LOCAL SPECIFICATIONS, AS REQUIRED BY LOCAL ORDINANCES.
47. THE CONTRACTOR SHALL MAINTAIN A FULL SET OF CONSTRUCTION DOCUMENTS AT THE SITE, UPDATED WITH THE LATEST REVISIONS AND ADDENDUMS OR CLARIFICATIONS AVAILABLE OF THE USE BY ALL PERSONNEL INVOLVED WITH THE PROJECT.
48. THE CONTRACTOR SHALL SUBMIT, AT THE END OF THE PROJECT, A COMPLETE SET OF "AS BUILT" DRAWINGS TO TOWER OWNERS PROJECT MANAGER.
49. THE CONTRACTOR MUST PROVIDE CLOSE OUT DOCUMENTS AT THE FINAL INSPECTION WALK BEFORE PAYMENTS WILL BE MADE.

VENDOR:

T-Mobile

4533 ENTERPRISE DR
OKLAHOMA CITY OK 73128

Branch COMMUNICATIONS
A SOLUTIONS PROVIDER

BRANCH COMMUNICATIONS
7335 SOUTH LEWIS AVE. STE. 300
TULSA, OKLAHOMA 74136
(918) 949-4551

PRODUCED BY:

Branch ENGINEERING LLC.
A SOLUTIONS PROVIDER

BRANCH ENGINEERING LLC
7335 SOUTH LEWIS AVE. STE. 300
TULSA, OKLAHOMA 74136
(918) 949-4551

COA. 8525 EXP. 06/30/2024

SITE NAME:
OK03XC315

SITE NUMBER:
OK01538A

SITE ADDRESS:
1800 BLK WESTMINSTER
NICHOLS HILLS OK 73120

ENGINEER:

LICENSED PROFESSIONAL ENGINEER
JEROD R DOTSON
27779
OKLAHOMA

7/14/2

PE # 27779 EXP. 12/31/2023

NO	DATE	DESCRIPTION	B
A	01/25/22	PRELIMINARY ISSUE	BI
B	02/18/22	PRELIMINARY ISSUE	BI
C	04/08/22	PRELIMINARY ISSUE	BI
0	06/03/22	CONSTRUCTION ISSUE	BI
1	07/14/22	CONSTRUCTION ISSUE	B

SHEET TITLE:
GENERAL NOTES

SHEET NUMBER:	PROJECT #: OK01538A		REVISIO
GN1	BY: BDH	CKD BY: BDH	1

T-Mobile OK Consolidation OK01538A-OK03XC315 021822.dwg - Sheet:GN1 - User: Brian.Heimbach - Jul 14, 2022 - 2:39pm

Attachment: PC-2022-05 PACKET (5953 : T-Mobile - Special Permit Application)

GENERAL NOTES:

1. ELEVATIONS ARE U.S.G.S. DATUM.
2. ALL SITE WORK SHALL BE CAREFULLY COORDINATED BY THE GENERAL CONTRACTOR WITH THE LOCAL UTILITY COMPANY, TELEPHONE COMPANY AND ANY OTHER UTILITY COMPANIES HAVING JURISDICTION OVER THIS LOCATION.
3. DO NOT EXCAVATE OR DISTURB BEYOND THE PROPERTY LINES OR LEASE LINES, UNLESS OTHERWISE NOTED.
4. DO NOT SCALE BUILDING DIMENSIONS FROM DRAWINGS.
5. ANY DRAIN AND/OR FIELD TILE ENCOUNTERED DURING CONSTRUCTION SHALL BE RETURNED TO ITS ORIGINAL CONDITION PRIOR TO COMPLETION OF WORK. SIZE, LOCATION AND TYPE OF ANY UNDERGROUND UTILITIES OR IMPROVEMENTS SHALL BE ACCURATELY NOTED AND PLACED ON AS CONSTRUCTED DRAWINGS BY THE GENERAL CONTRACTOR AND ISSUED TO THE ENGINEER AT THE COMPLETION OF THE PROJECT.
6. ALL EXISTING UTILITIES, FACILITIES, CONDITIONS AND THEIR DIMENSIONS SHOWN ON PLANS HAVE BEEN PLOTTED FROM AVAILABLE RECORDS. THE ENGINEER AND OWNER ASSUME NO RESPONSIBILITY WHATSOEVER AS TO THE SUFFICIENCY OR ACCURACY OF THE INFORMATION SHOWN ON THE PLANS OR THE MANNER OF THEIR REMOVAL OR ADJUSTMENT. THE CONTRACTOOR SHALL BE RESPONSIBLE FOR DETERMINING EXACT LOCATION OF ALL EXISTING UTILITIES AND FACILITIES PRIOR TO THE START OF CONSTRUCTION. THE CONTRACTOR SHALL ALSO OBTAIN FROM EACH UTILITY COMPANY, DETAILED INFORMATION RELATIVE TO WORKING SCHEDULES AND METHODS OF REMOVING OR ADJUSTING EXISTING UTILITIES.
7. THE CONTRACTOR SHALL VERIFY ALL EXISTING UTILITIES, BOTH HORIZONTALLY AND VERTICALLY PRIOR TO THE START OF CONSTRUCTION. ANY DISCREPANCIES OR DOUBTS AS TO THE INTERPRETATION OF PLANS SHOULD BE IMMEDIATELY REPORTED TO THE ENGINEER FOR RESOLUTION AND INSTRUCTION, AND NO FURTHER WORK SHALL BE PERFORMED UNTIL THE DISCREPANCY IS CHECKED AND CORRECTED BY THE ENGINEER. FAILURE TO SECURE SUCH INSTRUCTION MEANS THE CONTRACTOR WILL HAVE WORKED AT HIS/HER OWN RISK AND EXPENSE. THE CONTRACTOR SHALL CALL LOCAL DIGGER HOT LINE FOR UTILITY LOCATIONS 3 WORKING DAYS PRIOR TO THE START OF CONSTRUCTION.
8. ALL NEW AND EXISTING UTILITY STRUCTURES ON SITE AND IN AREAS TO BE DISTURBED BY CONSTRUCTION SHALL BE ADJUSTED TO FINISH ELEVATIONS PRIOR TO INSPECTION OF FINAL WORK.
9. THE BUILDING DEPARTMENT ISSUING THE BUILDING PERMIT SHALL BE NOTIFIED AT LEAST 2 WORKING DAYS PRIOR TO THE COMMENCEMENT OF WORK OR AS STIPULATED BY THE CODE ENFORCEMENT OFFICIAL HAVING JURISDICTION.
10. GRADING OF THE SITE WORK AREA IS TO BE SMOOTHE AND CONTINUOUS IN SLOP AND IS TO FEATHER INTO EXISTING GRADES AT THE GRADING LIMITS.
11. ALL TEMPORARY EXCAVATIONS FOR THE INSTALLATION OF FOUNDATIONS, UTILITIES, ETC., SHALL BE PROPERLY LAID BACK OR BRACED IN ACCORDANCE WITH CORRECT OCCUPATIONAL SAFETY AND HEALTH ADMINISTRATION (OSHA) REQUIREMENTS.
12. STRUCTURAL FILLS SUPPORTING PAVEMENTS SHALL BE COMPACTED TO 100% OF MAXIMUM STANDARD PROCTOR DRY DENSITY.
13. NEW GRADES NOT IN BUILDING AND DRIVEWAY IMPROVEMENT AREA TO BE ACHIEVED BY FILLING WITH APPROVED CLEAN FILL AND COMPACTED TO 95% OF STANDARD PROCTOR DENSITY.
14. ALL FILL SHALL BE PLACED IN UNIFORM LIFTS. THE LIFTS THICKNESS SHOULD NOT EXCEED THAT WHICK CAN BE PROPERLY COMPACTED THROUGHOUT ITS ENTIRE DEPTH WITH THE EQUIPMENT AVAILABLE.
15. ANY FILLS PLACED ON EXISTING SLOPES THAT ARE STEEPED THAN 10 HORIZONTAL TO 1 VERTICAL, SHALL BE PROPERLY BENCHED INTO THE EXISTING SLOPE AS DIRECTED BY A GEOTECHNICAL ENGINEER.
16. THE GRADES WITHIN THE FENCED-IN AREA ARE TO BE ACHIEVED BY COMPACTING CLEAN FILL TO A DENSITY OF 90% OF STANDARD PROCTOR COVERING THE AREA WITH 6 MIL. VISQUENE (1' OVERLAP AT SEAMS) FOR WEED SUPPRESSION, THEN ACHIEVING FINISHED GRADE BY ADDING 6" OF 3/4" CRUSHED STONE-NO FINES.
17. CONTRACTOR SHALL CLEAN ENTIRE SITE AFTER CONSTRUCTION SUCH THAT NO PAPERS, TRASH, WEEDS, BRUSH OR ANY OTHER DEPOSITS WILL REMAIN. ALL MATERIALS COLLECTED DURING CLEANING OPERATIONS SHALL BE DISPOSED OF OFF-SITE BY GENERAL CONTRACTOR.
18. ALL TREES AND SHRUBS WHICH ARE NOT IN DIRECT CONFLICT WITH THE IMPROVEMENTS SHALL BE PROTECTED BY THE CONTRACTOR.
19. DRIVEWAY CONSTRUCTION, GRADING AND DRAINAGE WORK SHALL CONFORM TO ALL STATE AND LOCAL COUNTY ORDINANCES.
20. ALL SITE WORK SHALL BE CAREFULLY COORDINATED BY GENERAL CONTRACTOR WITH LOCAL UTILITY COMPANY, TELEPHONE COMPANY AND ANY OTHER UTILITY COMPANIES HAVING JURISDICTION OVER THIS LOCATION.
21. FOR SITES WHERE A CRANE IS NECESSARY, THE CONTRACTOR SHALL CONFIRM AN UNOBSTRUCTED ROUTE FOR THE CRANE FROM A PUBLIC ROAD TO THE WATER TANK SITE PRIOR TO CONSTRUCTION/ NO AERIAL OBSTRUCTIONS UNDER 15' ABOVE GRADE, INCLUDING AERIAL UTILITY LINE, ARE ALLOWED ALONG SAID CRANE ROUTE.

CONTRACTOR TO OBTAIN LATEST RFDS FROM T-MOBILE PRIOR TO CONSTRUCTION FOR ALL PROPOSED EQUIPMENT, ORIENTATION, AND ELEVATIONS.

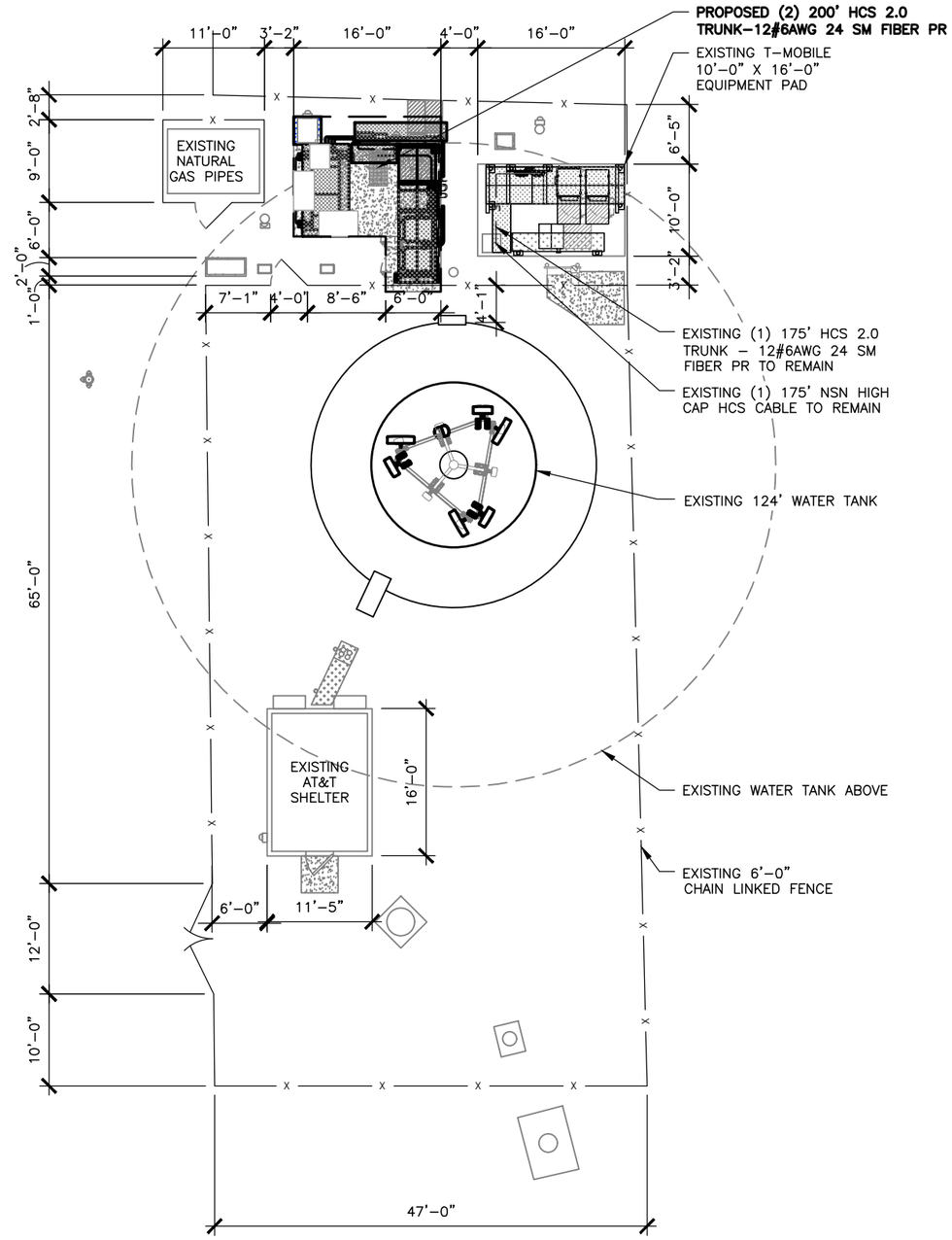

1 OVERALL SITE PLAN

SCALE: 0' 5' 10' 20' 30'

TRUE NORTH (3.37° E) MAG

VENDOR:

T-Mobile

4533 ENTERPRISE DR
OKLAHOMA CITY OK 73128

Branch COMMUNICATIONS
A SOLUTIONS PROVIDER

BRANCH COMMUNICATIONS
7335 SOUTH LEWIS AVE. STE. 300
TULSA, OKLAHOMA 74136
(918) 949-4551

PRODUCED BY:

Branch ENGINEERING LLC.
A SOLUTIONS PROVIDER

BRANCH ENGINEERING LLC
7335 SOUTH LEWIS AVE. STE. 300
TULSA, OKLAHOMA 74136
(918) 949-4551

COA. 8525 EXP. 06/30/2024

SITE NAME:
OK03XC315

SITE NUMBER:
OK01538A

SITE ADDRESS:
1800 BLK WESTMINSTER
NICHOLS HILLS OK 73120

ENGINEER:

LICENSED PROFESSIONAL ENGINEER
JEROD R DOTSON
27779
OKLAHOMA

7/14/

PE # 27779 EXP. 12/31/2023

NO	DATE	DESCRIPTION	B
A	01/25/22	PRELIMINARY ISSUE	BI
B	02/18/22	PRELIMINARY ISSUE	BI
C	04/08/22	PRELIMINARY ISSUE	BI
0	06/03/22	CONSTRUCTION ISSUE	BI
1	07/14/22	CONSTRUCTION ISSUE	B

SHEET TITLE:
OVERALL SITE PLAN

SHEET NUMBER:	PROJECT #: OK01538A		REVISI
C1	BY: BDH	CKD BY: BDH	1

T-Mobile OK Consolidation OK01538A-OK03XC315 021822.dwg - Sheet:C1 - User: Brian.Heimbach - Jul 14, 2022 - 2:39pm

Attachment: PC-2022-05 PACKET (5953 : T-Mobile - Special Permit Application)

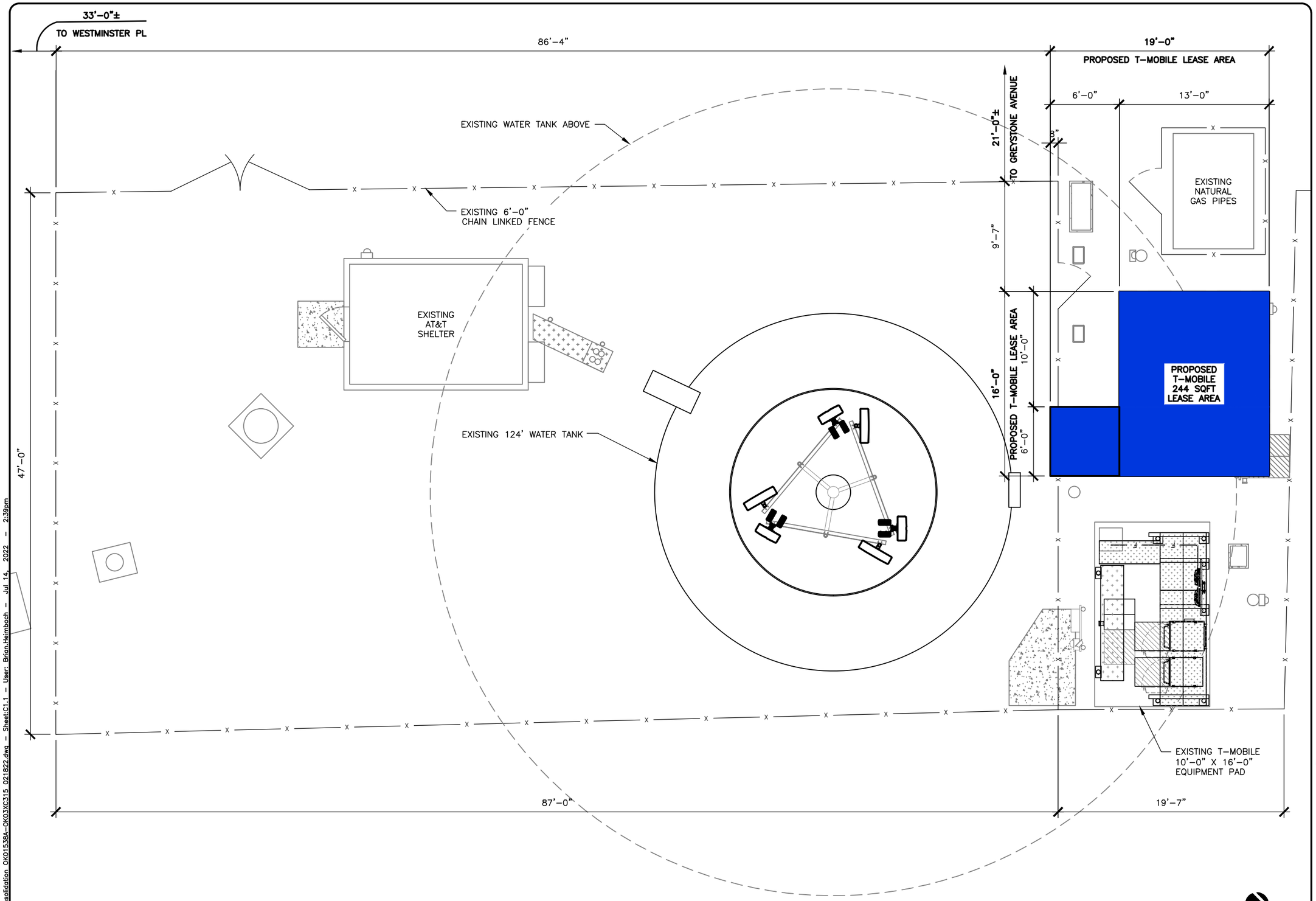

1 **OVERALL SITE PLAN**

SCALE: 0' 5' 10' 20' 30'

VENDOR:

T-Mobile

4533 ENTERPRISE DR
OKLAHOMA CITY OK 73128

Branch COMMUNICATIONS
A SOLUTIONS PROVIDER

BRANCH COMMUNICATIONS
7335 SOUTH LEWIS AVE. STE. 300
TULSA, OKLAHOMA 74136
(918) 949-4551

PRODUCED BY:

Branch ENGINEERING LLC.
A SOLUTIONS PROVIDER

BRANCH ENGINEERING LLC
7335 SOUTH LEWIS AVE. STE. 300
TULSA, OKLAHOMA 74136
(918) 949-4551

COA. 8525 EXP. 06/30/2024

SITE NAME:
OK03XC315

SITE NUMBER:
OK01538A

SITE ADDRESS:
1800 BLK WESTMINSTER
NICHOLS HILLS OK 73120

ENGINEER:

LICENSED PROFESSIONAL ENGINEER
JEROD R DOTSON
27779
OKLAHOMA

7/14/

PE # 27779 EXP. 12/31/2023

NO	DATE	DESCRIPTION	B
A	01/25/22	PRELIMINARY ISSUE	BI
B	02/18/22	PRELIMINARY ISSUE	BI
C	04/08/22	PRELIMINARY ISSUE	BI
0	06/03/22	CONSTRUCTION ISSUE	BI
1	07/14/22	CONSTRUCTION ISSUE	B

SHEET TITLE:
LEASE LOCATION

SHEET NUMBER:	PROJECT #: OK01538A		REVISIO
C1.1	BY: BDH	CKD BY: BDH	1

T-Mobile_OK_Consolidation_OK01538A-OK03XC315_021822.dwg – Sheet:C1.1 – User: Brian.Heimbach – Jul 14, 2022 – 2:39pm

Attachment: PC-2022-05 PACKET (5953 : T-Mobile - Special Permit Application)

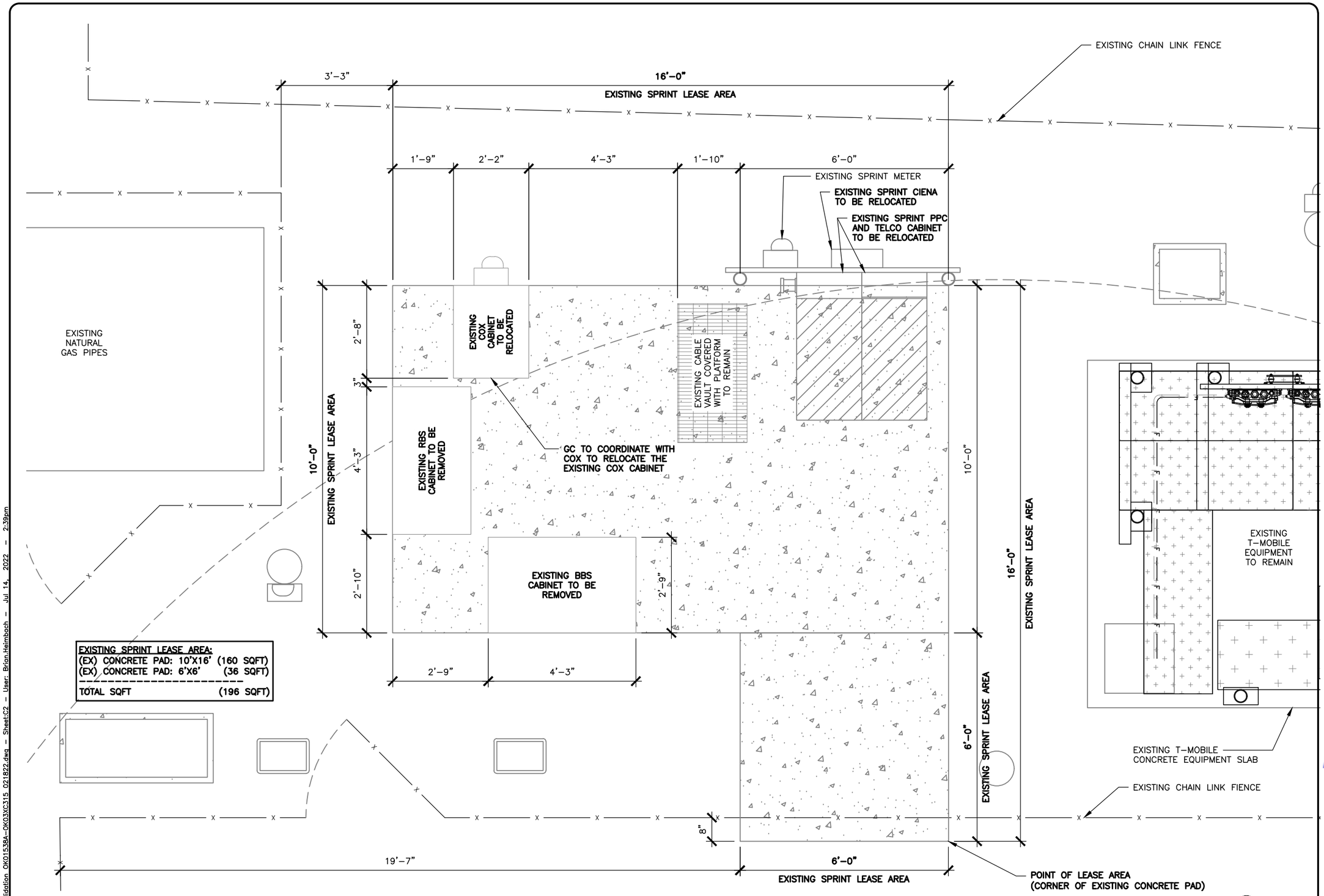

1 EXISTING ENLARGED EQUIPMENT LAYOUT

SCALE: 0' 1' 5' 10'

VENDOR:

T-Mobile

4533 ENTERPRISE DR
OKLAHOMA CITY OK 73128

Branch COMMUNICATIONS
A SOLUTIONS PROVIDER

BRANCH COMMUNICATIONS
7335 SOUTH LEWIS AVE. STE. 300
TULSA, OKLAHOMA 74136
(918) 949-4551

PRODUCED BY:

Branch ENGINEERING LLC.
A SOLUTIONS PROVIDER

BRANCH ENGINEERING LLC
7335 SOUTH LEWIS AVE. STE. 300
TULSA, OKLAHOMA 74136
(918) 949-4551

COA. 8525 EXP. 06/30/2024

SITE NAME:
OK03XC315

SITE NUMBER:
OK01538A

SITE ADDRESS:
1800 BLK WESTMINSTER
NICHOLS HILLS OK 73120

ENGINEER:

LICENSED PROFESSIONAL ENGINEER
JEROD R DOTSON
27779
OKLAHOMA
7/14/2

PE # 27779 EXP. 12/31/2023

NO	DATE	DESCRIPTION	B
A	01/25/22	PRELIMINARY ISSUE	BI
B	02/18/22	PRELIMINARY ISSUE	BI
C	04/08/22	PRELIMINARY ISSUE	BI
0	06/03/22	CONSTRUCTION ISSUE	BI
1	07/14/22	CONSTRUCTION ISSUE	B

SHEET TITLE: **EXISTING EQUIPMENT LAYOUT**

SHEET NUMBER:	PROJECT #: OK01538A		REVISIO
C2	BY: BDH	CKD BY: BDH	1

T-Mobile OK Consolidation OK01538A-OK03XC315 021822.dwg – Sheet:C2 – User: Brian.Heimbach – Jul 14, 2022 – 2:39pm

Attachment: PC-2022-05 PACKET (5953 : T-Mobile - Special Permit Application)

CONTRACTOR TO PLUMB PROPOSED CABINETS WITH APPROPRIATE SIZED CONDUCTORS AND CONDUITS TO MEET NEC STANDARDS FOR 200A SERVICE AS REQUIRED

PROPOSED COVP WIRING TO BE INSTALLED IN LIQUID-TIGHT METALLIC, FLEXIBLE CONDUIT

PROPOSED HPL3 AND LB3 ARE TO BE INSTALLED AS TO WHERE THE DOORS WILL OPEN FULLY AND LATCH 90° WITHOUT ANY INTERFERENCE AND AS TO WHERE THE TECH WILL NOT BE TRAPPED WHEN WORKING ON OR IN THE CABINETS. TECH WILL NEED A QUICK AND CLEAN EGRESS IN CASE OF AN EMERGENCY!

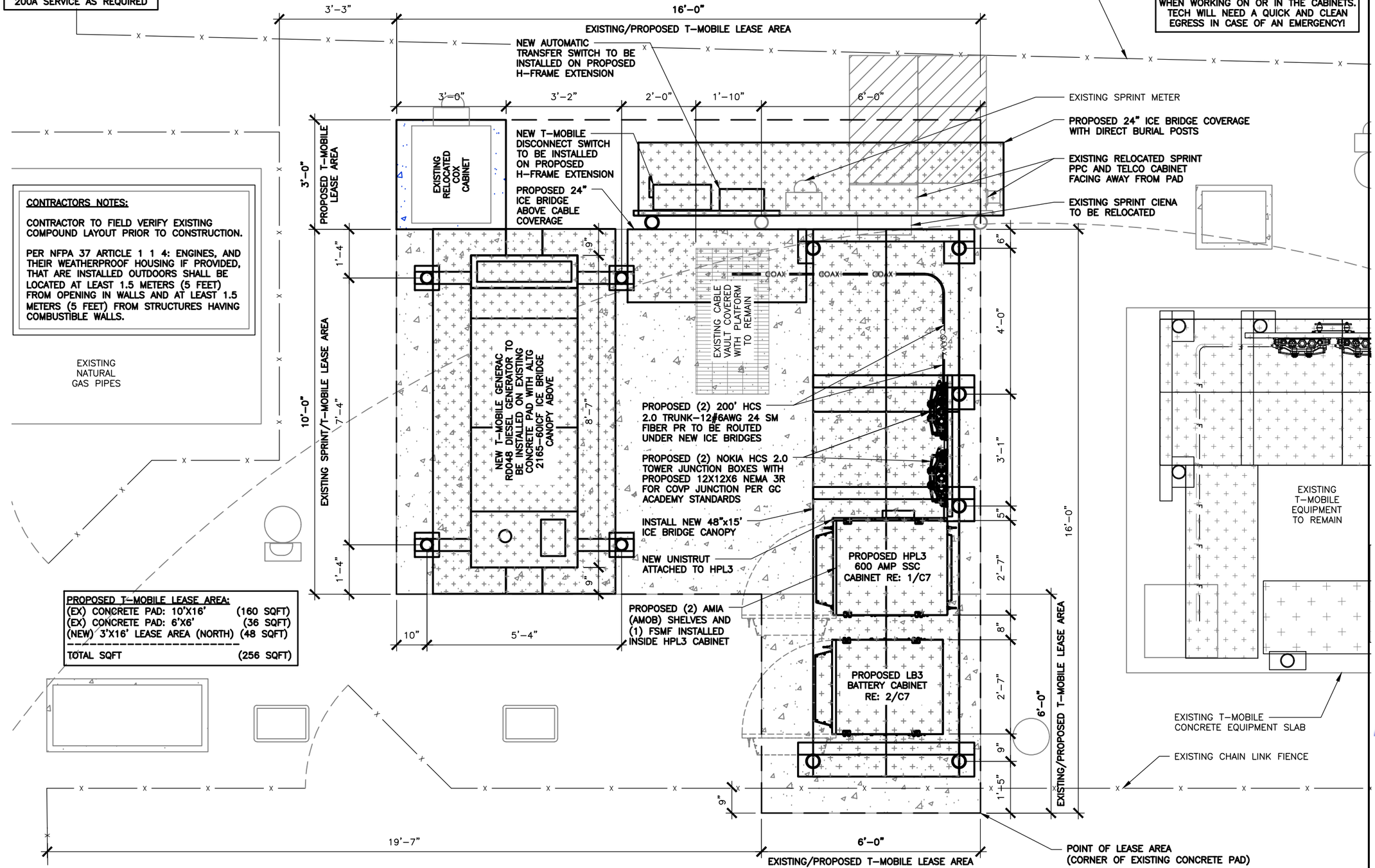

CONTRACTORS NOTES:

CONTRACTOR TO FIELD VERIFY EXISTING COMPOUND LAYOUT PRIOR TO CONSTRUCTION.

PER NFPA 37 ARTICLE 1 1 4: ENGINES, AND THEIR WEATHERPROOF HOUSING IF PROVIDED, THAT ARE INSTALLED OUTDOORS SHALL BE LOCATED AT LEAST 1.5 METERS (5 FEET) FROM OPENING IN WALLS AND AT LEAST 1.5 METERS (5 FEET) FROM STRUCTURES HAVING COMBUSTIBLE WALLS.

PROPOSED T-MOBILE LEASE AREA:

(EX) CONCRETE PAD: 10'X16'	(160 SQFT)
(EX) CONCRETE PAD: 6'X6'	(36 SQFT)
(NEW) 3'X16' LEASE AREA (NORTH)	(48 SQFT)
TOTAL SQFT	(256 SQFT)

1 PROPOSED ENLARGED EQUIPMENT LAYOUT

SCALE: 0' 1' 5' 10'

VENDOR:

T-Mobile

4533 ENTERPRISE DR
OKLAHOMA CITY OK 73128

Branch COMMUNICATIONS
A SOLUTIONS PROVIDER

BRANCH COMMUNICATIONS
7335 SOUTH LEWIS AVE. STE. 300
TULSA, OKLAHOMA 74136
(918) 949-4551

PRODUCED BY:

Branch ENGINEERING LLC.
A SOLUTIONS PROVIDER

BRANCH ENGINEERING LLC
7335 SOUTH LEWIS AVE. STE. 300
TULSA, OKLAHOMA 74136
(918) 949-4551

COA. 8525 EXP. 06/30/2024

SITE NAME:
OK03XC315

SITE NUMBER:
OK01538A

SITE ADDRESS:
1800 BLK WESTMINSTER
NICHOLS HILLS OK 73120

ENGINEER:

LICENSED PROFESSIONAL ENGINEER
JEROD R DOTSON
27779
OKLAHOMA

7/14/2

PE # 27779 EXP. 12/31/2023

NO	DATE	DESCRIPTION	B
A	01/25/22	PRELIMINARY ISSUE	BI
B	02/18/22	PRELIMINARY ISSUE	BI
C	04/08/22	PRELIMINARY ISSUE	BI
0	06/03/22	CONSTRUCTION ISSUE	BI
1	07/14/22	CONSTRUCTION ISSUE	B

SHEET TITLE: **PROPOSED EQUIPMENT LAYOUT**

SHEET NUMBER:	PROJECT #: OK01538A		REVISIO
C2.1	BY: BDH	CKD BY: BDH	1

T-Mobile OK Consolidation OK01538A-OK03XC315 021822.dwg – Sheet:C2.1 – User: Brian.Heimbach – Jul 14, 2022 – 2:39pm

Attachment: PC-2022-05 PACKET (5953 : T-Mobile - Special Permit Application)

THESE DRAWINGS ARE NOT INTENDED TO REFLECT THE STRUCTURAL INTEGRITY OF THE TOWER. THE PROPOSED ANTENNAS AND TRANSMISSION LINES SHOWN ARE REPRESENTATIVE IN NATURE AND DO NOT REFLECT THE ACTUAL CONFIGURATIONS REQUIRED. THE CONTRACTOR SHALL REFER TO THE STRUCTURAL ANALYSIS OF THIS TOWER SITE FOR THE APPROVED LOCATION AND CONFIGURATION OF ALL ANTENNAS AND TRANSMISSION LINES. ALL ANTENNAS MUST BE MOUNTED AND THE TRANSMISSION LINES CONFIGURED IN STRICT ACCORDANCE WITH THE STRUCTURAL ANALYSIS. (TOWER BY OTHERS)

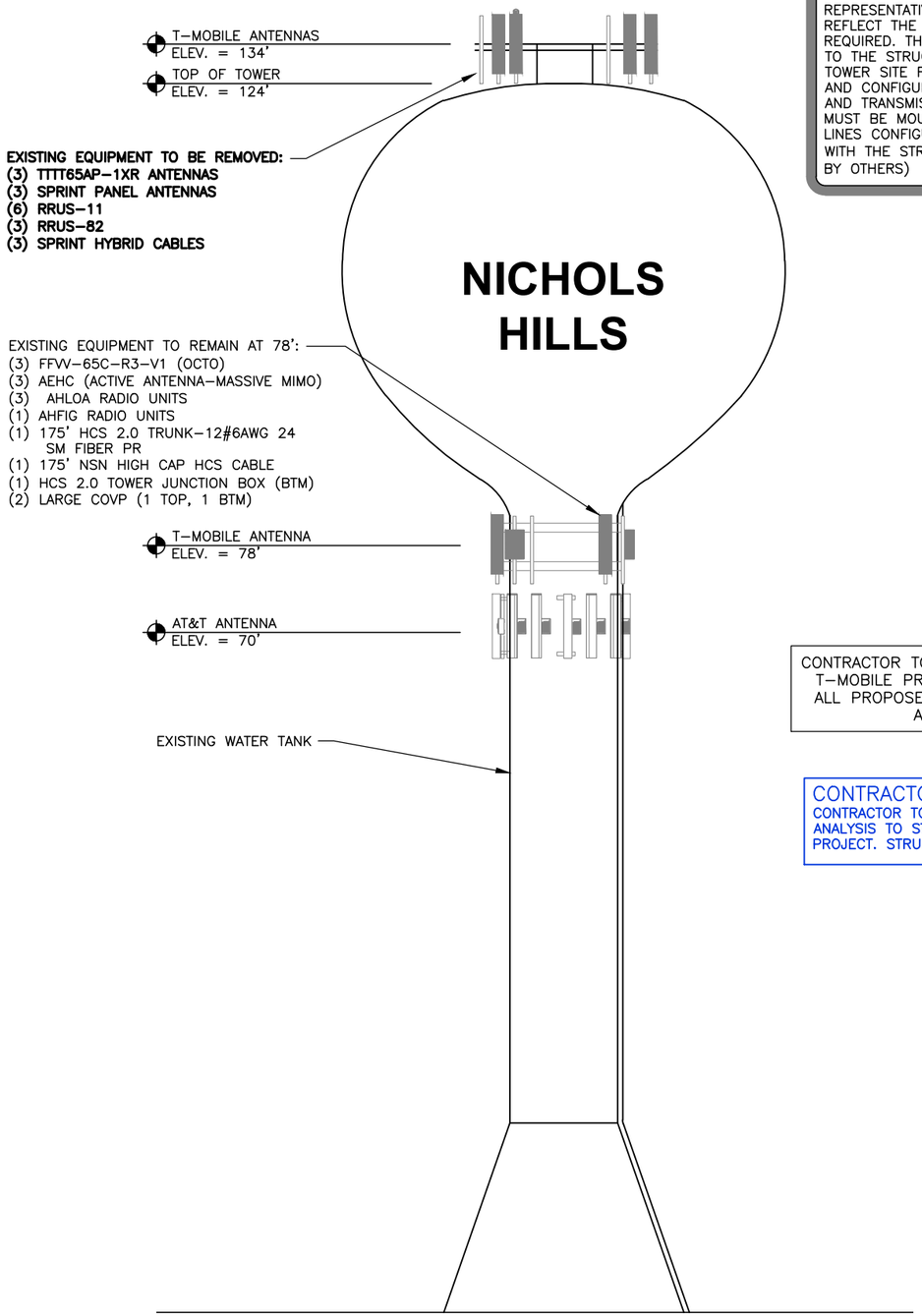

1 **EXISTING TOWER ELEVATION**

SCALE: N.T.S.

CONTRACTOR TO OBTAIN LATEST RFDS FROM T-MOBILE PRIOR TO CONSTRUCTION FOR ALL PROPOSED EQUIPMENT, ORIENTATION, AND ELEVATIONS.

CONTRACTOR NOTE:
CONTRACTOR TO HAVE PASSING STRUCTURAL ANALYSIS TO START CONSTRUCTION ON THIS PROJECT. STRUCTURAL ANALYSIS BY OTHERS.

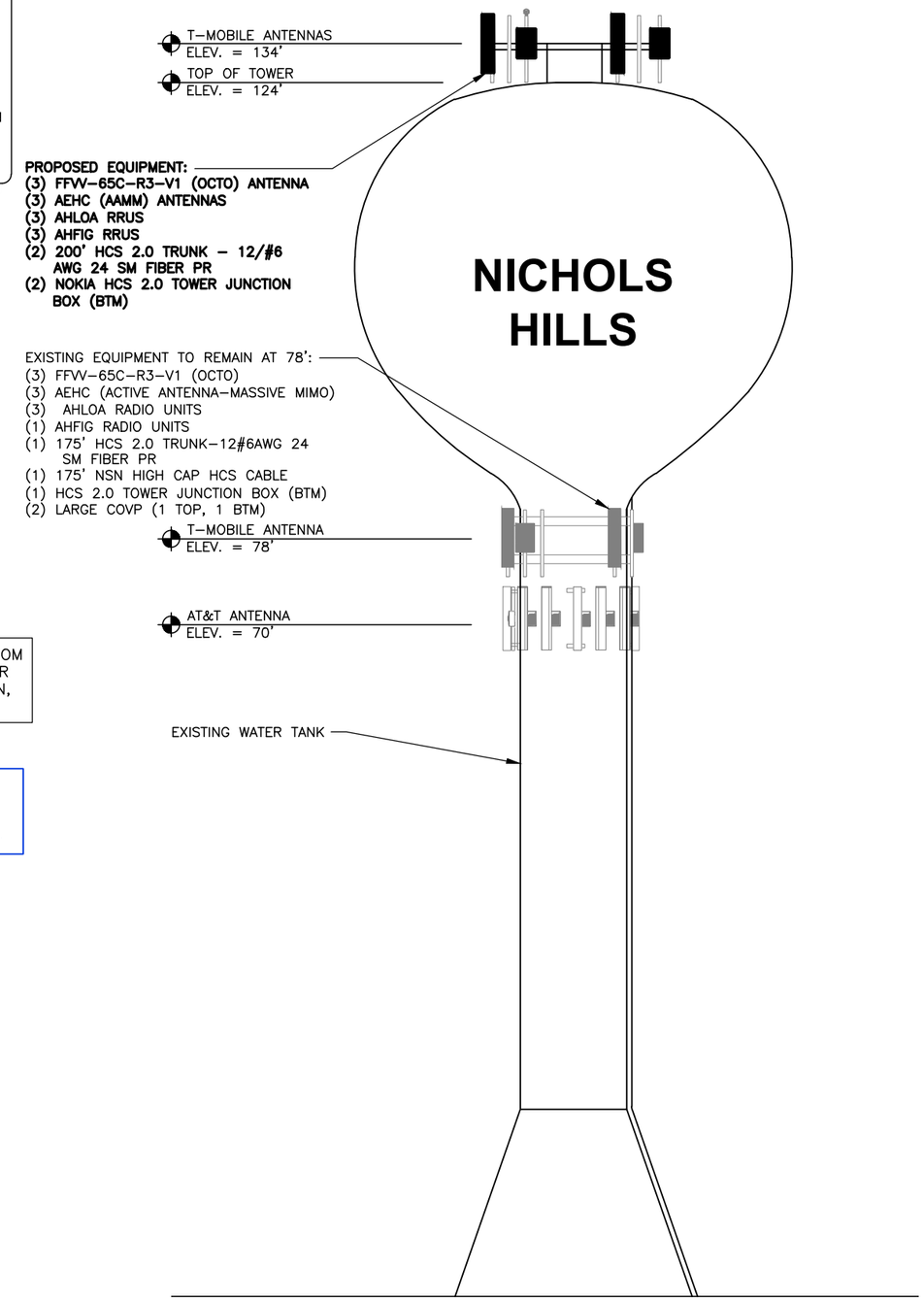

2 **PROPOSED TOWER ELEVATION**

SCALE: N.T.S.

VENDOR:

T-Mobile

4533 ENTERPRISE DR
OKLAHOMA CITY OK 73128

Branch COMMUNICATIONS
A SOLUTIONS PROVIDER

BRANCH COMMUNICATIONS
7335 SOUTH LEWIS AVE. STE. 300
TULSA, OKLAHOMA 74136
(918) 949-4551

PRODUCED BY:

Branch ENGINEERING LLC.
A SOLUTIONS PROVIDER

BRANCH ENGINEERING LLC
7335 SOUTH LEWIS AVE. STE. 300
TULSA, OKLAHOMA 74136
(918) 949-4551

COA. 8525 EXP. 06/30/2024

SITE NAME:
OK03XC315

SITE NUMBER:
OK01538A

SITE ADDRESS:
1800 BLK WESTMINSTER
NICHOLS HILLS OK 73120

ENGINEER:

LICENSED PROFESSIONAL ENGINEER
JEROD R DOTSON
27779
OKLAHOMA

7/14/2

PE # 27779 EXP. 12/31/2023

NO	DATE	DESCRIPTION	B
A	01/25/22	PRELIMINARY ISSUE	BI
B	02/18/22	PRELIMINARY ISSUE	BI
C	04/08/22	PRELIMINARY ISSUE	BI
0	06/03/22	CONSTRUCTION ISSUE	BI
1	07/14/22	CONSTRUCTION ISSUE	B

SHEET TITLE:
TOWER ELEVATIONS

SHEET NUMBER:	PROJECT #: OK01538A		REVISIO
C3	BY: BDH	CKD BY: BDH	1

Attachment: PC-2022-05 PACKET (5953 : T-Mobile - Special Permit Application)

T-Mobile OK Consolidation OK01538A-OK03XC315 021822.dwg - Sheet:C3 - User: Brian.Heimbach - Jul 14, 2022 - 2:39pm

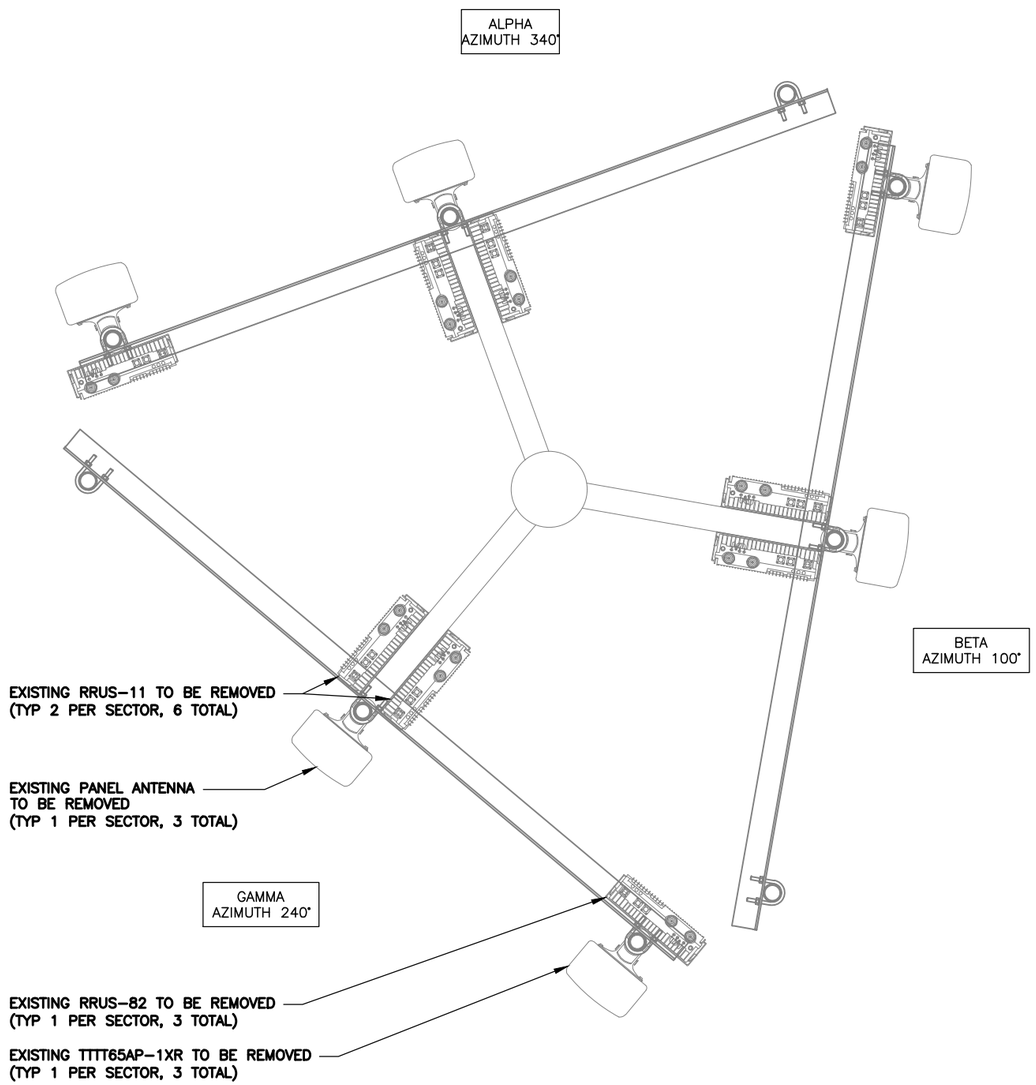

TRUE NORTH
(3.37° E)
MAG

1 EXISTING AZIMUTH PLAN

SCALE: N.T.S.

RFDS VERSION: OK01538A_REPLACEMENT_1_03/16/2022

RAN Scope of Work:

20210908:- Add FSFM v105 for GSM. Reflected 2 HCS 2.0 Trunk = 200'. Voltage booster + 3rd Amp required for HCS 2.0 Trunk with AHLOA/AHFIG. 2 ABIA required as per Baseband Dimensioning.
20211001: Changing design from Final to Interim due to loss of surrounding Sprint sites in this area. Keeping at Final design would leave a CDMA coverage hole. (ks)
20220316: Design change from Interim to Final. Due to CDMA shutdown, Sprint equipment no longer needed. (ks)

CONTRACTOR TO INSTALL PER MOST CURRENT RFDS–CONFIRM WITH T–MOBILE CONSTRUCTION MANAGER

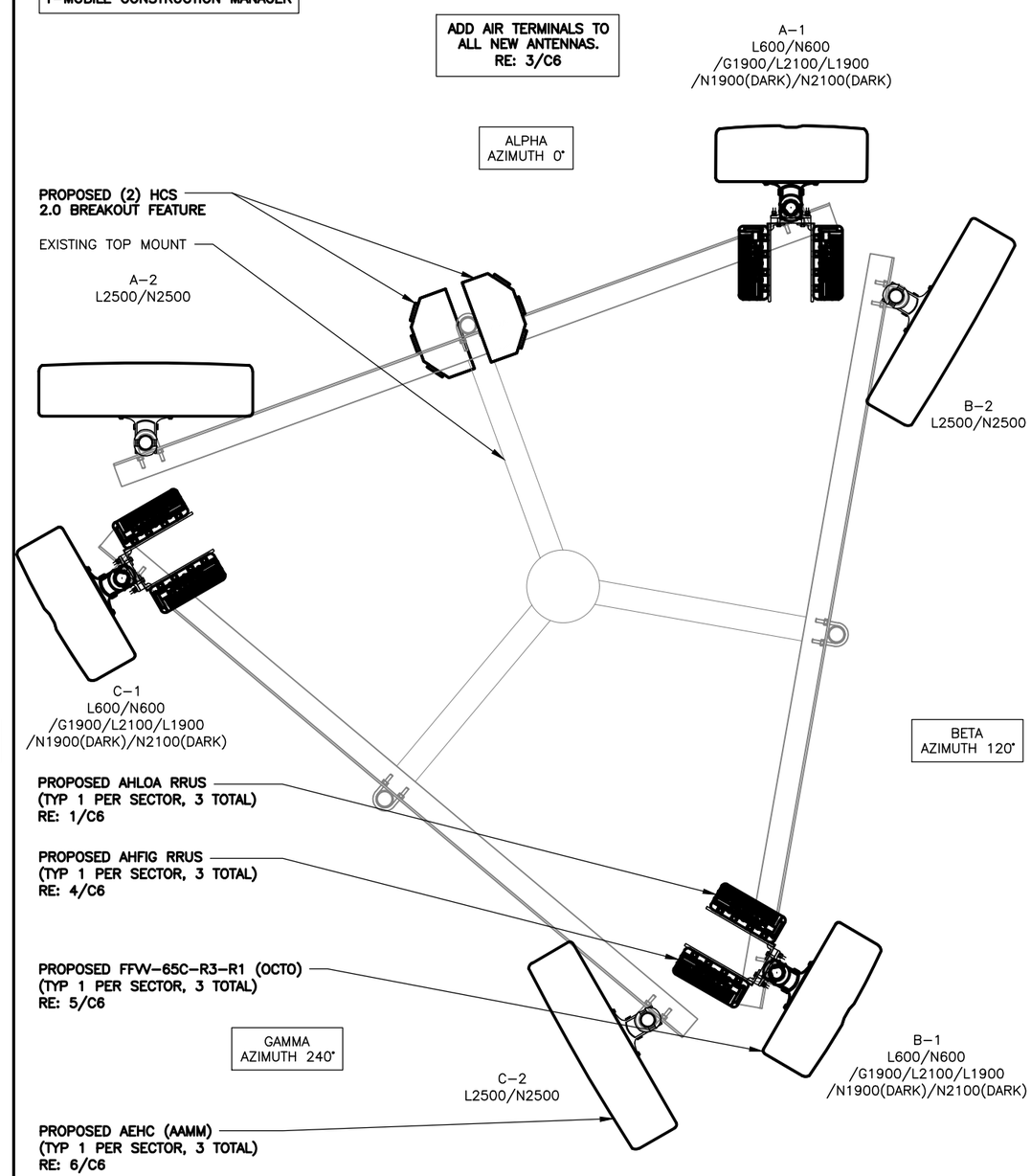

TRUE NORTH
(3.37° E)
MAG

2 PROPOSED AZIMUTH PLAN

SCALE: N.T.S.

RFDS VERSION: OK01538A_REPLACEMENT_1_03/16/2022

VENDOR:

T-Mobile

4533 ENTERPRISE DR
OKLAHOMA CITY OK 73128

Branch COMMUNICATIONS
A SOLUTIONS PROVIDER

BRANCH COMMUNICATIONS
7335 SOUTH LEWIS AVE. STE. 300
TULSA, OKLAHOMA 74136
(918) 949–4551

PRODUCED BY:

Branch ENGINEERING LLC.
A SOLUTIONS PROVIDER

BRANCH ENGINEERING LLC
7335 SOUTH LEWIS AVE. STE. 300
TULSA, OKLAHOMA 74136
(918) 949–4551

COA. 8525 EXP. 06/30/2024

SITE NAME:
OK03XC315

SITE NUMBER:
OK01538A

SITE ADDRESS:
1800 BLK WESTMINSTER
NICHOLS HILLS OK 73120

ENGINEER:

LICENSED PROFESSIONAL ENGINEER
JEROD R DOTSON
27779
OKLAHOMA

7/14/2

PE # 27779 EXP. 12/31/2023

NO	DATE	DESCRIPTION	B
A	01/25/22	PRELIMINARY ISSUE	BI
B	02/18/22	PRELIMINARY ISSUE	BI
C	04/08/22	PRELIMINARY ISSUE	BI
0	06/03/22	CONSTRUCTION ISSUE	BI
1	07/14/22	CONSTRUCTION ISSUE	B

SHEET TITLE:
EXISTING AND PROPOSED ANTENNA PLAN

SHEET NUMBER:	PROJECT #: OK01538A		REVISIO
C4	BY: BDH	CKD BY: BDH	1

T–Mobile OK Consolidation OK01538A–OK03XC315 021822.dwg – Sheet:C4 – User: Brian.Heimbach – Jul 14, 2022 – 2:39pm

Attachment: PC-2022-05 PACKET (5953 : T-Mobile - Special Permit Application)

CONTRACTOR TO OBTAIN LATEST RFDS FROM T–MOBILE PRIOR TO CONSTRUCTION FOR ALL PROPOSED EQUIPMENT, ORIENTATION, AND ELEVATIONS AS THEY MAY HAVE CHANGED FROM THE BELOW SCHEDULE.

EXISTING EQUIPMENT SCHEDULE

	EQUIPMENT TYPE	EXISTING AZIMUTH	RAD CENTER	EQUIPMENT	QTY TO BE REMOVED	QTY TO REMAIN
ALPHA SECTOR A	ANTENNA	340°	134'	TTTT65AP–1XR ANTENNA	(1)	––
	ANTENNA	340°	134'	SPRINT PANEL ANTENNA	(1)	––
	RRUS	––	––	RRUS–11	(2)	––
	RRUS	––	––	RRUS–82	(1)	––
BETA SECTOR B	ANTENNA	100°	134'	TTTT65AP–1XR ANTENNA	(1)	––
	ANTENNA	100°	134'	SPRINT PANEL ANTENNA	(1)	––
	RRUS	––	––	RRUS–11	(2)	––
	RRUS	––	––	RRUS–82	(1)	––
GAMMA SECTOR C	ANTENNA	240°	134'	TTTT65AP–1XR ANTENNA	(1)	––
	ANTENNA	240°	134'	SPRINT PANEL ANTENNA	(1)	––
	RRUS	––	––	RRUS–11	(2)	––
	RRUS	––	––	RRUS–82	(1)	––
ALL	CABLES	––	––	SPRINT HYBRID CABLES	(3)	––

PROPOSED EQUIPMENT SCHEDULE

	EQUIPMENT TYPE	PROPOSED AZIMUTH	RAD CENTER	EQUIPMENT	QUANTITY TO BE ADDED
ALPHA/SECTOR A	ANTENNA	0°	134'	COMMSCOPE FFVV–65C–R3–V1 (OCTO)	(1)
	ANTENNA	0°	134'	AEHC (AAMM)	(1)
	RRH	––	––	AHFIG	(1)
	RRH	––	––	AHLOA	(1)
BETA/SECTOR B	ANTENNA	120°	134'	COMMSCOPE FFVV–65C–R3–V1 (OCTO)	(1)
	ANTENNA	120°	134'	AEHC (AAMM)	(1)
	RRH	––	––	AHFIG	(1)
	RRH	––	––	AHLOA	(1)
GAMMA/SECTOR C	ANTENNA	240°	134'	COMMSCOPE FFVV–65C–R3–V1 (OCTO)	(1)
	ANTENNA	240°	134'	AEHC (AAMM)	(1)
	RRH	––	––	AHFIG	(1)
	RRH	––	––	AHLOA	(1)
ALL	HCS 2.0 COVP	––	––	NOKIA HCS 2.0 TOWER JUNCTION BOX	(2–BTM)
	CABLE	––	––	200' HCS 2.0 TRUNK – 12#6AWG 24 SM FIBER PR	(2)

1 **EQUIPMENT SCHEDULES**

SCALE: N.T.S.

VENDOR:

T-Mobile

4533 ENTERPRISE DR
OKLAHOMA CITY OK 73128

Branch COMMUNICATIONS
A SOLUTIONS PROVIDER

BRANCH COMMUNICATIONS
7335 SOUTH LEWIS AVE. STE. 300
TULSA, OKLAHOMA 74136
(918) 949–4551

PRODUCED BY:

Branch ENGINEERING LLC.
A SOLUTIONS PROVIDER

BRANCH ENGINEERING LLC
7335 SOUTH LEWIS AVE. STE. 300
TULSA, OKLAHOMA 74136
(918) 949–4551

COA. 8525 EXP. 06/30/2024

SITE NAME:
OK03XC315

SITE NUMBER:
OK01538A

SITE ADDRESS:
1800 BLK WESTMINSTER
NICHOLS HILLS OK 73120

ENGINEER:

LICENSED PROFESSIONAL ENGINEER
JEROD R DOTSON
27779
OKLAHOMA

7/14/2

PE # 27779 EXP. 12/31/2023

NO	DATE	DESCRIPTION	B
A	01/25/22	PRELIMINARY ISSUE	BI
B	02/18/22	PRELIMINARY ISSUE	BI
C	04/08/22	PRELIMINARY ISSUE	BI
0	06/03/22	CONSTRUCTION ISSUE	BI
1	07/14/22	CONSTRUCTION ISSUE	B

SHEET TITLE:
ANTENNA SCHEDULE

SHEET NUMBER:	PROJECT #: OK01538A		REVISIO
C5	BY: BDH	CKD BY: BDH	1

Attachment: PC-2022-05 PACKET (5953 : T-Mobile - Special Permit Application)

T-Mobile OK Consolidation OK01538A–OK03XC315 021822.dwg – Sheet:C5 – User: Brian.Heimbach – Jul 14, 2022 – 2:39pm

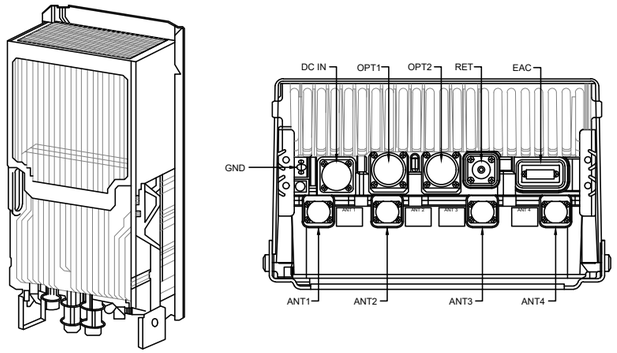

DIMENSION	VALUE
HEIGHT	22 INCHES (W/ BRACKET 26.6 INCHES)
WIDTH	12.1 INCHES (W/ BRACKET 12.9 INCHES)
DEPTH	7.4 INCHES (W/ BRACKET 8.1 INCHES)
WEIGHT	83.8 LBS

CHARACTERSTIC	AHLOA CAPABILITY
NOMINAL SUPPLY VOLTAGE	-48.0 VDC
NOMINAL INPUT VOLT RANGE	-40.5 TO -57.0 VDC
EXTENDED INPUT VOLT RAGE	-36.0 TO -40.5 VDC -57.0 TO -60.0 VDC
VOLTAGE	14.5 V
POWER SUPPLY	T.B.D.

1 AHLOA RRH DETAIL

SCALE: N.T.S.

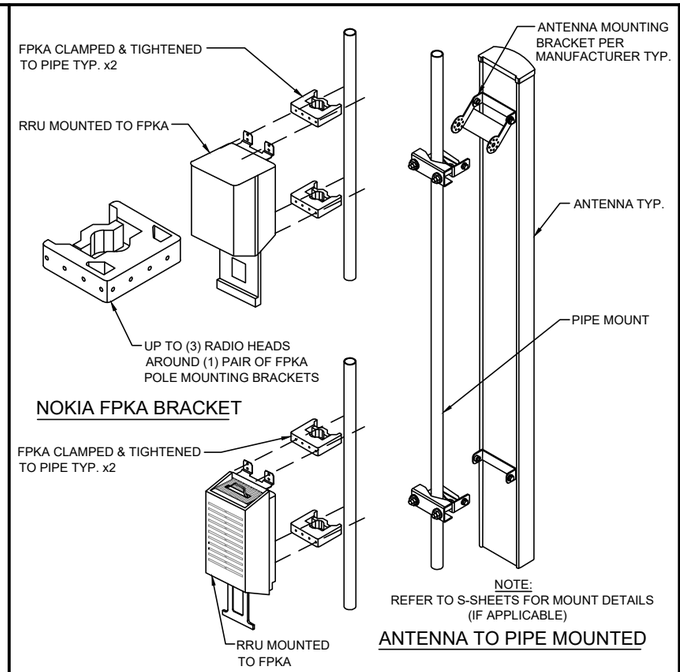

2 ANTENNA MOUNT DETAIL

SCALE: N.T.S.

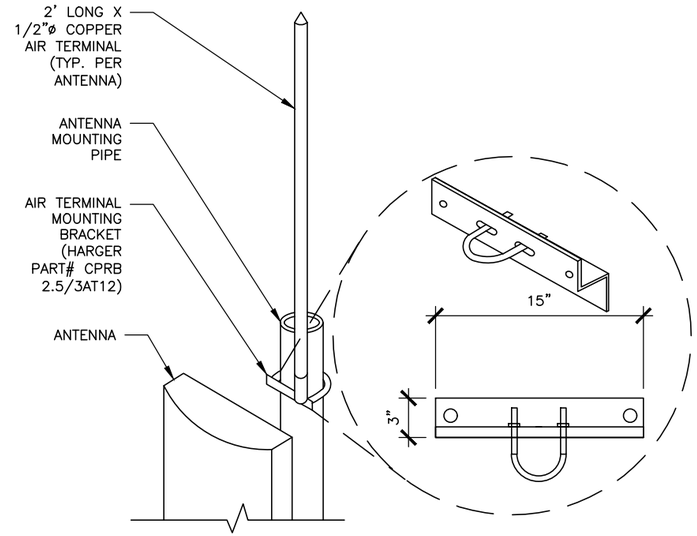

3 AIR TERMINAL AND MOUNT DETAIL

SCALE: N.T.S.

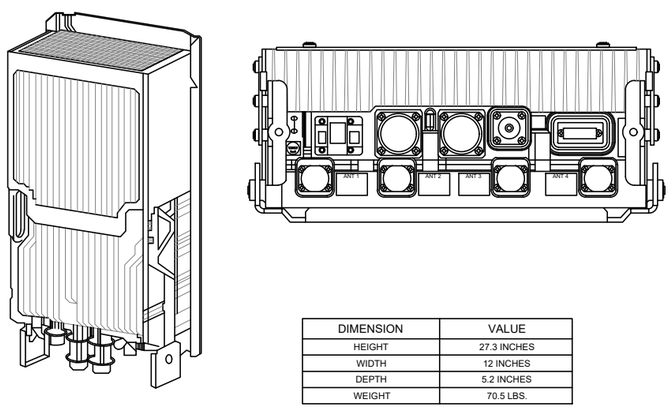

DIMENSION	VALUE
HEIGHT	27.3 INCHES
WIDTH	12 INCHES
DEPTH	5.2 INCHES
WEIGHT	70.5 LBS.

PRODUCT	AHFIG (AIRSCALE 4T4R DUAL MID-BAND RADIO)
TYPE	4T4R RRH (1 PER SECTOR), 2X9.8 CPRI FIBER
MAX OUTPUT POWER	4X40W AWS + 3X80W PCS (MAX 4 CARRIERS PER BAND)
SPECTRUM BAND	B25 + B66 (SRAN CAPABLE)
IBW (DL/UL)	B66: 80MHZ B25: 65 MHZ
FORM FACTOR (HXWXD) WEIGHT (LBS)	695 MM (27.3") X 308MM (12") X 131MM (5.2") 70.5 LBS (32 KG)

4 AHFIG RRH DETAIL

SCALE: N.T.S.

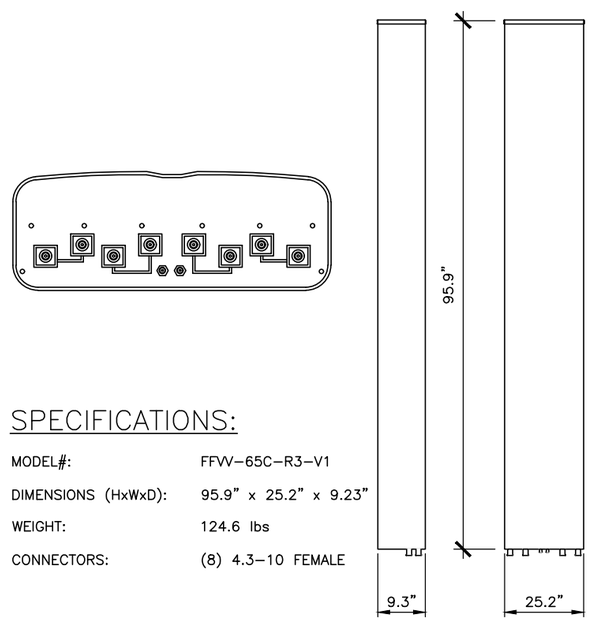

SPECIFICATIONS:

MODEL#:	FFVV-65C-R3-V1
DIMENSIONS (HxWxD):	95.9" x 25.2" x 9.23"
WEIGHT:	124.6 lbs
CONNECTORS:	(8) 4.3-10 FEMALE

5 FFVV-65C-R3-V1 (OCTO) ANTENNA DETAIL

SCALE: N.T.S.

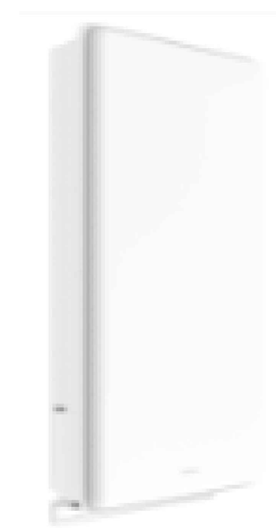

SPECIFICATIONS:

MODEL#:	AEHC (ACTIVE ANTENNA – MASSIVE MIMO)
DIMENSIONS (HxWxD):	38.19" x 21.46" x 5.91"
WEIGHT:	99.2 lbs

6 AEHC (ACTIVE ANTENNA - MASSIVE MIMO) ANTENNA DETAIL

SCALE: N.T.S.

VENDOR:

T-Mobile

4533 ENTERPRISE DR
OKLAHOMA CITY OK 73128

Branch COMMUNICATIONS
A SOLUTIONS PROVIDER

BRANCH COMMUNICATIONS
7335 SOUTH LEWIS AVE. STE. 300
TULSA, OKLAHOMA 74136
(918) 949-4551

PRODUCED BY:

Branch ENGINEERING LLC.
A SOLUTIONS PROVIDER

BRANCH ENGINEERING LLC
7335 SOUTH LEWIS AVE. STE. 300
TULSA, OKLAHOMA 74136
(918) 949-4551

COA. 8525 EXP. 06/30/2024

SITE NAME:
OK03XC315

SITE NUMBER:
OK01538A

SITE ADDRESS:
1800 BLK WESTMINSTER
NICHOLS HILLS OK 73120

ENGINEER:

LICENSED PROFESSIONAL ENGINEER
JEROD R DOTSON
27779
OKLAHOMA

7/14/

PE # 27779 EXP. 12/31/2023

NO	DATE	DESCRIPTION	B
A	01/25/22	PRELIMINARY ISSUE	BI
B	02/18/22	PRELIMINARY ISSUE	BI
C	04/08/22	PRELIMINARY ISSUE	BI
0	06/03/22	CONSTRUCTION ISSUE	BI
1	07/14/22	CONSTRUCTION ISSUE	B

SHEET TITLE:
EQUIPMENT DETAILS

SHEET NUMBER:	PROJECT #: OK01538A		REVISIO
C6	BY: BDH	CKD BY: BDH	1

T-Mobile OK Consolidation OK01538A-OK03XC315 021822.dwg - Sheet:C6 - User: Brian.Heimbach - Jul 14, 2022 - 2:39pm

Attachment: PC-2022-05 PACKET (5953 : T-Mobile - Special Permit Application)

Characteristics	Alliance	CommScope	NWS
Dimensions, in.	9.3x14.9x5.8	6.7x16.9x4.7	10.2x16.0x3.2
Weight	1.61 lb/ft	0.970 lb/ft	1.61 lb/ft
Port Interface	Senko U	Senko U	Senko U
Hybrid Ports	12	12	12
Conductor Termination	None	None	None
Single Mode Fibers	48	48	48
Fiber Termination	LC pair	LC pair	LC pair
Max RRU	12	12	12

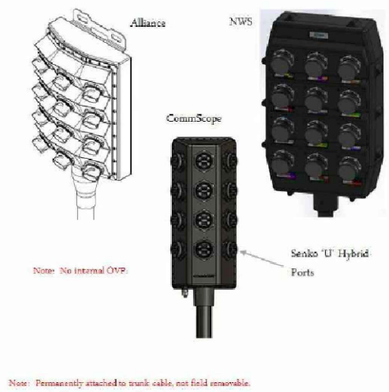

1 HCS 2.0 BREAKOUT SPECIFICATION DETAIL

SCALE: N.T.S.

RAYCAP: BOTTOM COVP/FIBER JUNCTION BOX (RTMDC-5634-PF-48)

NOMINAL OPERATING VOLTAGE:	48 VDC
NOMINAL DISCHARGE CURRENT:	20 kA 8/20ms
MAXIMUM SURGE CURRENT:	60 kA 8/20ms
MAXIMUM CONTINUOUS OPERATING VOLTAGE:	75 VDC
VOLTAGE PROTECTION RATING:	400 V
TOTAL WEIGHT:	21.85 lbs

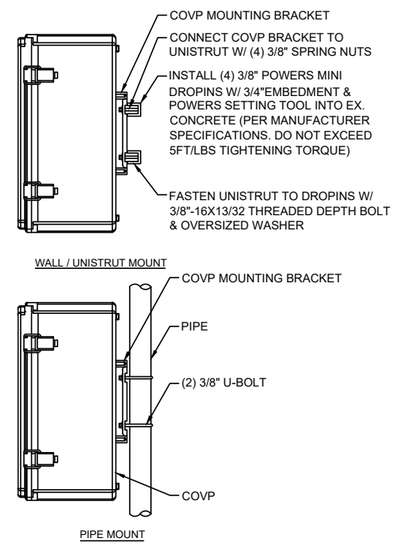

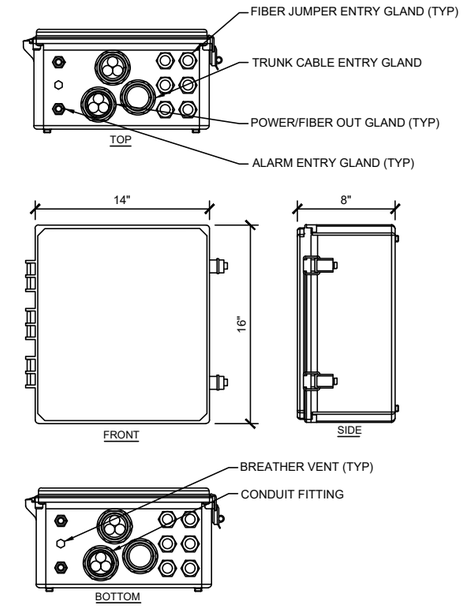

2 NOKIA HCS 2.0 TOWER JUNCTION BOX DETAIL

SCALE: N.T.S.

The dimensions of the AMIA are shown below

Property	Value
Height	5.0 inches (128 mm)
Depth	15.7 inches (400 mm)
Width	17.6 inches (447 mm)
Weight	Empty - 10.9 lbs (4.94 kg) With blinds – 14.8 lbs (6.7 kg) Fully loaded – 52 lbs (23.58 kg)

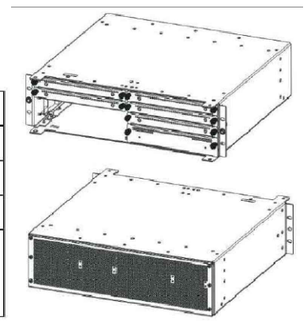

3 AMIA SPECIFICATION DETAIL

SCALE: N.T.S.

DETAIL FOR REFERENCE ONLY

4 MOUNTING DETAIL

SCALE: N.T.S.

VENDOR:

T-Mobile

4533 ENTERPRISE DR
OKLAHOMA CITY OK 73128

Branch COMMUNICATIONS
A SOLUTIONS PROVIDER

BRANCH COMMUNICATIONS
7335 SOUTH LEWIS AVE. STE. 300
TULSA, OKLAHOMA 74136
(918) 949-4551

PRODUCED BY:

Branch ENGINEERING LLC.
A SOLUTIONS PROVIDER

BRANCH ENGINEERING LLC
7335 SOUTH LEWIS AVE. STE. 300
TULSA, OKLAHOMA 74136
(918) 949-4551

COA. 8525 EXP. 06/30/2024

SITE NAME:
OK03XC315

SITE NUMBER:
OK01538A

SITE ADDRESS:
1800 BLK WESTMINSTER
NICHOLS HILLS OK 73120

ENGINEER:

LICENSED PROFESSIONAL ENGINEER
JEROD R DOTSON
27779
OKLAHOMA

7/14/

PE # 27779 EXP. 12/31/2023

NO	DATE	DESCRIPTION	B
A	01/25/22	PRELIMINARY ISSUE	BI
B	02/18/22	PRELIMINARY ISSUE	BI
C	04/08/22	PRELIMINARY ISSUE	BI
0	06/03/22	CONSTRUCTION ISSUE	BI
1	07/14/22	CONSTRUCTION ISSUE	B

SHEET TITLE:
EQUIPMENT DETAILS

SHEET NUMBER:	PROJECT #: OK01538A		REVISIO
C7	BY: BDH	CKD BY: BDH	1

T-Mobile OK Consolidation OK01538A-OK03XC315 021822.dwg - Sheet:C7 - User: Brian.Heimbach - Jul 14, 2022 - 2:39pm

Attachment: PC-2022-05 PACKET (5953 : T-Mobile - Special Permit Application)

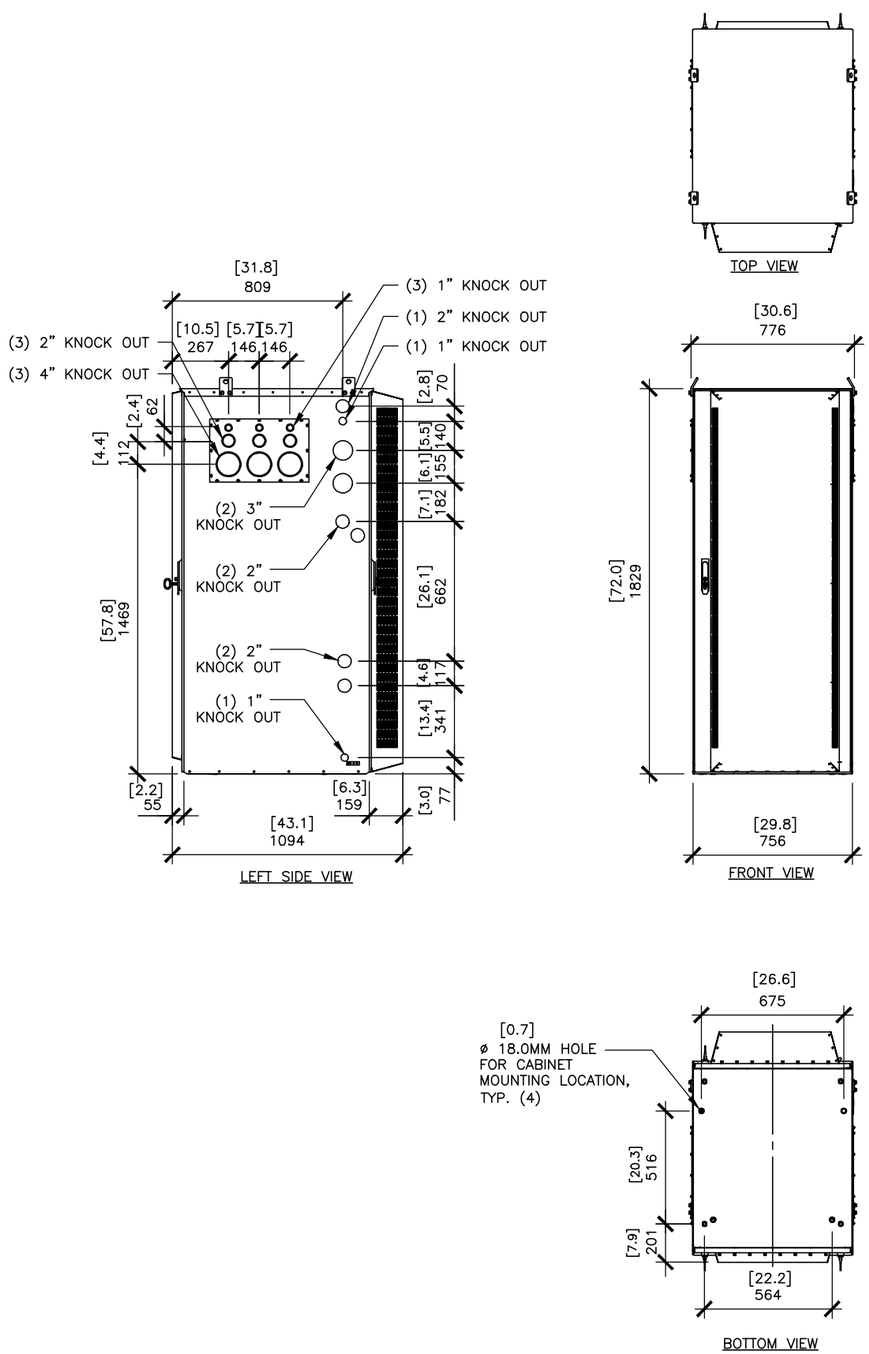

1 DELTA HPL3 600AMP SSC CABINET

SCALE: N.T.S.

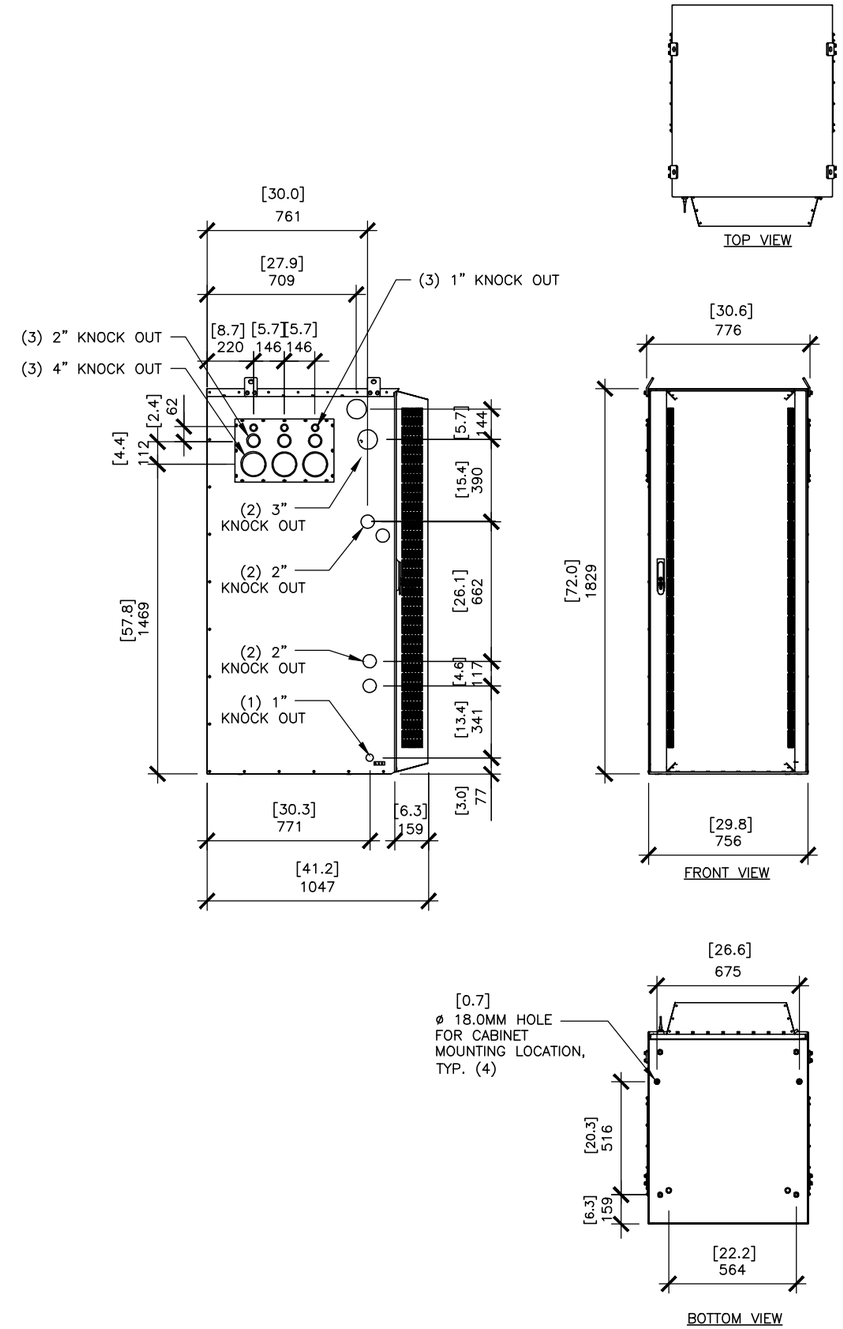

2 DELTA LB3 LARGE BATTERY CABINET

SCALE: N.T.S.

VENDOR:

T-Mobile

4533 ENTERPRISE DR
OKLAHOMA CITY OK 73128

Branch COMMUNICATIONS
A SOLUTIONS PROVIDER

BRANCH COMMUNICATIONS
7335 SOUTH LEWIS AVE. STE. 300
TULSA, OKLAHOMA 74136
(918) 949-4551

PRODUCED BY:

Branch ENGINEERING LLC.
A SOLUTIONS PROVIDER

BRANCH ENGINEERING LLC
7335 SOUTH LEWIS AVE. STE. 300
TULSA, OKLAHOMA 74136
(918) 949-4551

COA. 8525 EXP. 06/30/2024

SITE NAME:
OK03XC315

SITE NUMBER:
OK01538A

SITE ADDRESS:
1800 BLK WESTMINSTER
NICHOLS HILLS OK 73120

ENGINEER:

LICENSED PROFESSIONAL ENGINEER
JEROD R DOTSON
27779
OKLAHOMA

7/14/2

PE # 27779 EXP. 12/31/2023

NO	DATE	DESCRIPTION	B
A	01/25/22	PRELIMINARY ISSUE	BI
B	02/18/22	PRELIMINARY ISSUE	BI
C	04/08/22	PRELIMINARY ISSUE	BI
0	06/03/22	CONSTRUCTION ISSUE	BI
1	07/14/22	CONSTRUCTION ISSUE	B

SHEET TITLE:
EQUIPMENT DETAILS

SHEET NUMBER:	PROJECT #: OK01538A		REVISIO
C8	BY: BDH	CKD BY: BDH	1

Attachment: PC-2022-05 PACKET (5953 : T-Mobile - Special Permit Application)

T-Mobile OK Consolidation OK01538A-OK03XC315 021822.dwg - Sheet:C8 - User: Brian.Heinbach - Jul 14, 2022 - 2:39pm

CABINET LAYOUT - POSITIONING

Most common type of install

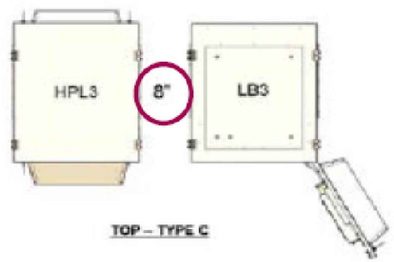

Future

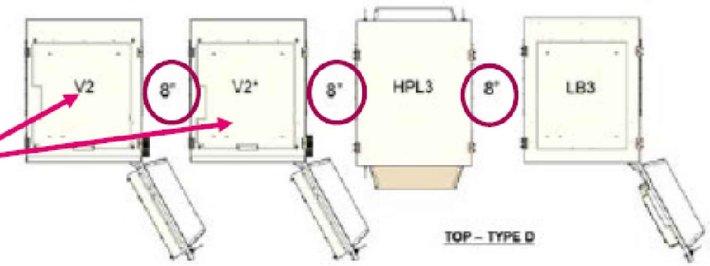

Minimum separation of cabinets is 8 inches

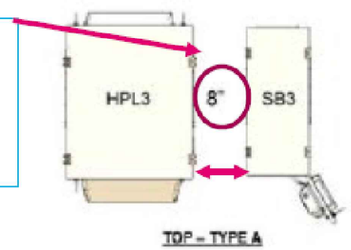

Future

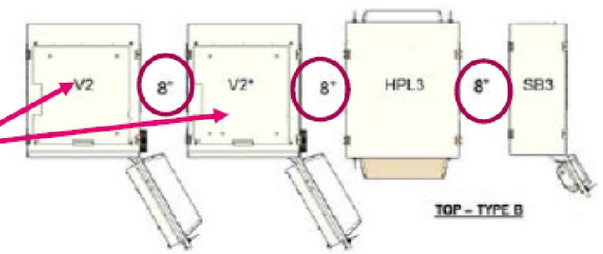

Cabinet positioning on the slab, raised platform or grating needs to follow the right-to-left orientation. The Battery Cabinet needs to be placed at the far-right end of our leased space. To the left of the Battery Cabinet, separated by 8", will be the Delta HPL3 SSC. All future expansion at this site will follow the right-to-left direction, with 8" spacing between cabinets.

T-Mobile Confidential

T-Mobile
PLAN·PROCURE·DEVELOP

1 **EQUIPMENT DETAILS**
SCALE: N.T.S.

VENDOR:
T-Mobile
4533 ENTERPRISE DR
OKLAHOMA CITY OK 73128

Branch COMMUNICATIONS
A SOLUTIONS PROVIDER
BRANCH COMMUNICATIONS
7335 SOUTH LEWIS AVE. STE. 300
TULSA, OKLAHOMA 74136
(918) 949-4551

PRODUCED BY:
Branch ENGINEERING LLC.
A SOLUTIONS PROVIDER
BRANCH ENGINEERING LLC
7335 SOUTH LEWIS AVE. STE. 300
TULSA, OKLAHOMA 74136
(918) 949-4551
COA. 8525 EXP. 06/30/2024

SITE NAME:
OK03XC315

SITE NUMBER:
OK01538A

SITE ADDRESS:
1800 BLK WESTMINSTER
NICHOLS HILLS OK 73120

ENGINEER:
LICENSED PROFESSIONAL ENGINEER
JEROD R DOTSON
27779
OKLAHOMA
7/14/2
PE # 27779 EXP. 12/31/2023

NO	DATE	DESCRIPTION	B
A	01/25/22	PRELIMINARY ISSUE	BI
B	02/18/22	PRELIMINARY ISSUE	BI
C	04/08/22	PRELIMINARY ISSUE	BI
0	06/03/22	CONSTRUCTION ISSUE	BI
1	07/14/22	CONSTRUCTION ISSUE	B

SHEET TITLE:
EQUIPMENT DETAILS

SHEET NUMBER:	PROJECT #: OK01538A		REVISIO
C9	BY: BDH	CKD BY: BDH	1

Attachment: PC-2022-05 PACKET (5953 : T-Mobile - Special Permit Application)

T-Mobile_OK_Consolidation_OK01538A-OK03XC315_021822.dwg – Sheet:C9 – User: Brian.Heimbach – Jul 14, 2022 – 2:39pm

CABINET LAYOUT - EQUIPMENT

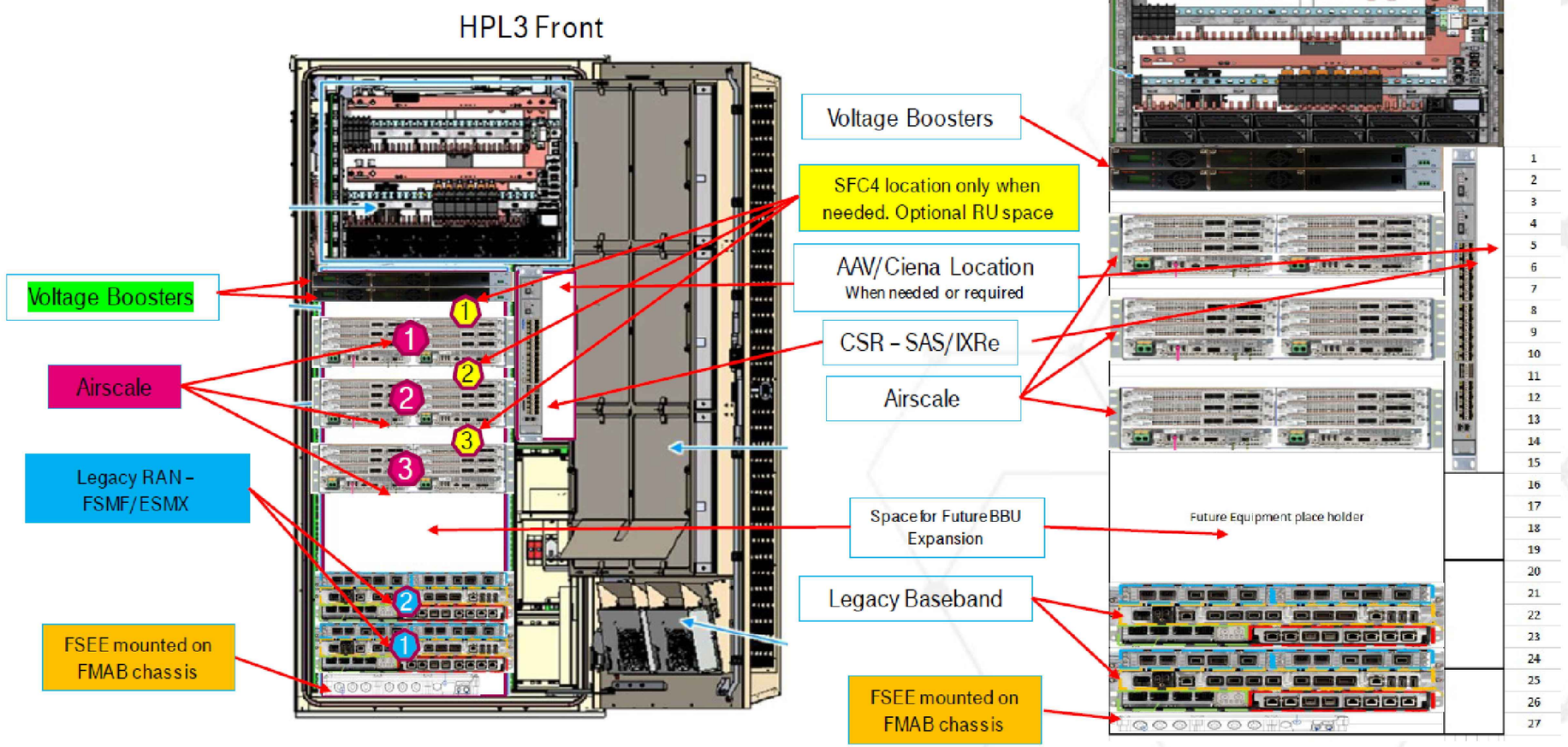

T-Mobile Confidential

T-Mobile
PLAN·PROCURE·DEVELOP

1 EQUIPMENT DETAILS

SCALE: N.T.S.

VENDOR:

T-Mobile
4533 ENTERPRISE DR
OKLAHOMA CITY OK 73128

Branch COMMUNICATIONS
A SOLUTIONS PROVIDER
BRANCH COMMUNICATIONS
7335 SOUTH LEWIS AVE. STE. 300
TULSA, OKLAHOMA 74136
(918) 949-4551

PRODUCED BY:
Branch ENGINEERING LLC.
A SOLUTIONS PROVIDER
BRANCH ENGINEERING LLC
7335 SOUTH LEWIS AVE. STE. 300
TULSA, OKLAHOMA 74136
(918) 949-4551
COA. 8525 EXP. 06/30/2024

SITE NAME:
OK03XC315

SITE NUMBER:
OK01538A

SITE ADDRESS:
1800 BLK WESTMINSTER
NICHOLS HILLS OK 73120

ENGINEER:
LICENSED PROFESSIONAL ENGINEER
JEROD R DOTSON
27779
OKLAHOMA
7/14/2
PE # 27779 EXP. 12/31/2023

NO	DATE	DESCRIPTION	B
A	01/25/22	PRELIMINARY ISSUE	BI
B	02/18/22	PRELIMINARY ISSUE	BI
C	04/08/22	PRELIMINARY ISSUE	BI
0	06/03/22	CONSTRUCTION ISSUE	BI
1	07/14/22	CONSTRUCTION ISSUE	B

SHEET TITLE:
EQUIPMENT DETAILS

SHEET NUMBER:	PROJECT #: OK01538A		REVISIO
C10	BY: BDH	CKD BY: BDH	1

Attachment: PC-2022-05 PACKET (5953 : T-Mobile - Special Permit Application)

T-Mobile_OK_Consolidation_OK01538A-OK03XC315_021822.dwg - Sheet:C10 - User: Brian.Heimbach - Jul 14, 2022 - 2:39pm

LEFT SIDE KNOCK OUT ASSIGNMENTS

Left Side View

Back

Front

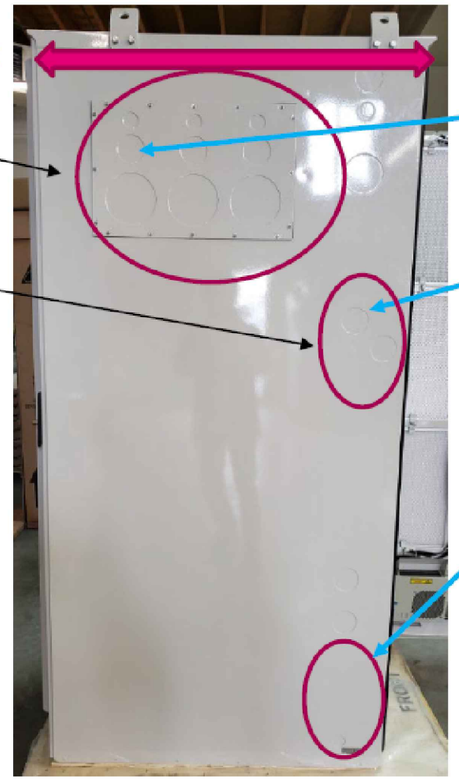

This panel of knockouts is intended for running DC cables to the COVP

Fiber & GPS Cable route

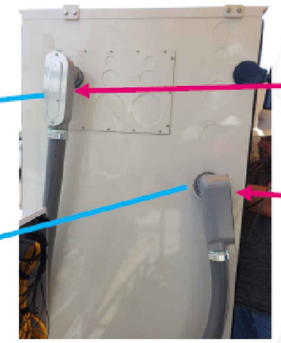

A 2" LB or LL is used here (LL preferred) for the DC cables running from the DC rectifier to the COVP. For HCS 2.0, there are 3 pairs, for A, B & G

A 2" LL is used here for the bottom fiber and GPS cable to and from the COVP

Use of LR and LL is recommended

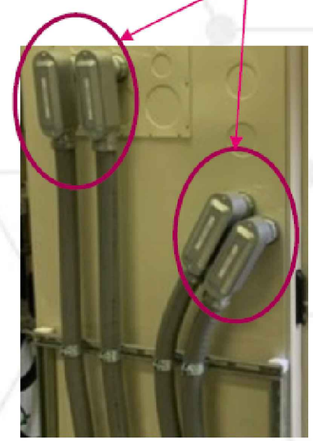

1" Bottom Left side knockouts intended for:

1. PPC Alarming
2. Fiber/Ethernet for AAV
3. AAV/Ciena DC Power

NOTE

Placing the fiber inside flexible conduit is preferred on ground installs to prevent animal/insect damage from chewing on the soy-based fiber jackets.

Rooftop installs, where there is less of a risk from damage by these varmints, can use water-tight grommets.

T-Mobile Confidential

T-Mobile
PLAN·PROCURE·DEVELOP

1 **EQUIPMENT DETAILS**

SCALE: N.T.S.

5.d.a

VENDOR:

T-Mobile

4533 ENTERPRISE DR
OKLAHOMA CITY OK 73128

Branch COMMUNICATIONS
A SOLUTIONS PROVIDER

BRANCH COMMUNICATIONS
7335 SOUTH LEWIS AVE. STE. 300
TULSA, OKLAHOMA 74136
(918) 949-4551

PRODUCED BY:

Branch ENGINEERING LLC.
A SOLUTIONS PROVIDER

BRANCH ENGINEERING LLC
7335 SOUTH LEWIS AVE. STE. 300
TULSA, OKLAHOMA 74136
(918) 949-4551

COA. 8525 EXP. 06/30/2024

SITE NAME:
OK03XC315

SITE NUMBER:
OK01538A

SITE ADDRESS:
1800 BLK WESTMINSTER
NICHOLS HILLS OK 73120

ENGINEER:

LICENSED PROFESSIONAL ENGINEER
JEROD R DOTSON
27779
OKLAHOMA

7/14/

PE # 27779 EXP. 12/31/2023

NO	DATE	DESCRIPTION	B
A	01/25/22	PRELIMINARY ISSUE	BI
B	02/18/22	PRELIMINARY ISSUE	BI
C	04/08/22	PRELIMINARY ISSUE	BI
0	06/03/22	CONSTRUCTION ISSUE	BI
1	07/14/22	CONSTRUCTION ISSUE	B

SHEET TITLE:
EQUIPMENT DETAILS

SHEET NUMBER:	PROJECT #: OK01538A		REVISI
C11	BY: BDH	CKD BY: BDH	1

Attachment: PC-2022-05 PACKET (5953 : T-Mobile - Special Permit Application)

T-Mobile_OK_Consolidation_OK01538A-OK03XC315_021822.dwg - Sheet:C11 - User: Brian.Heimbach - Jul 14, 2022 - 2:39pm

RIGHT SIDE KNOCK OUT ASSIGNMENT

Right Side View

Front

Back

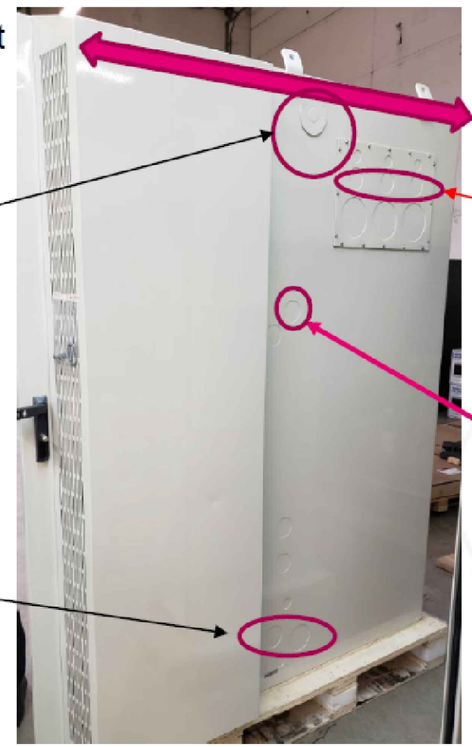

Battery cable route knockout: With the fixed length of Battery Cable provided, this is the preferred knockout to be used.

The Maximum distance between the SSC and Batt. Cab that the cable can support is 12 inches.

These 2" knockouts are used for DC and Alarm cabling to the Battery cabinet.

This 2" knockout is used for the AC cable to the Battery cabinet.

Intended for AC input cables from the PPC. To future proof our cabinet, these 2 knockouts will be used to run the 3/0 and 2 AWG THHN wires through the 3" and 2 ½" knockouts, respectively.

T-Mobile Confidential

T-Mobile
PLAN·PROCURE·DEVELOP

1 **EQUIPMENT DETAILS**

SCALE: N.T.S.

T-Mobile_OK_Consolidation_OK01538A-OK03XC315_021822.dwg – Sheet:C12 – User: Brian.Heinbach – Jul 14, 2022 – 2:39pm

5.d.a

VENDOR:

T-Mobile

4533 ENTERPRISE DR
OKLAHOMA CITY OK 73128

Branch COMMUNICATIONS
A SOLUTIONS PROVIDER

BRANCH COMMUNICATIONS
7335 SOUTH LEWIS AVE. STE. 300
TULSA, OKLAHOMA 74136
(918) 949-4551

PRODUCED BY:

Branch ENGINEERING LLC.
A SOLUTIONS PROVIDER

BRANCH ENGINEERING LLC
7335 SOUTH LEWIS AVE. STE. 300
TULSA, OKLAHOMA 74136
(918) 949-4551

COA. 8525 EXP. 06/30/2024

SITE NAME:
OK03XC315

SITE NUMBER:
OK01538A

SITE ADDRESS:
1800 BLK WESTMINSTER
NICHOLS HILLS OK 73120

ENGINEER:

LICENSED PROFESSIONAL ENGINEER
JEROD R DOTSON
27779
OKLAHOMA

7/14/

PE # 27779 EXP. 12/31/2023

NO	DATE	DESCRIPTION	B
A	01/25/22	PRELIMINARY ISSUE	BI
B	02/18/22	PRELIMINARY ISSUE	BI
C	04/08/22	PRELIMINARY ISSUE	BI
0	06/03/22	CONSTRUCTION ISSUE	BI
1	07/14/22	CONSTRUCTION ISSUE	B

SHEET TITLE:
EQUIPMENT DETAILS

SHEET NUMBER:	PROJECT #: OK01538A		REVISIO
C12	BY: BDH	CKD BY: BDH	1

Attachment: PC-2022-05 PACKET (5953 : T-Mobile - Special Permit Application)

KNOCK OUT ASSIGNMENT – SAMPLE INSTALL

Between HPL3 & LB3 Cabinet

Battery cable with Anderson connector routed inside the HPL3 cabinet thru 3" conduit

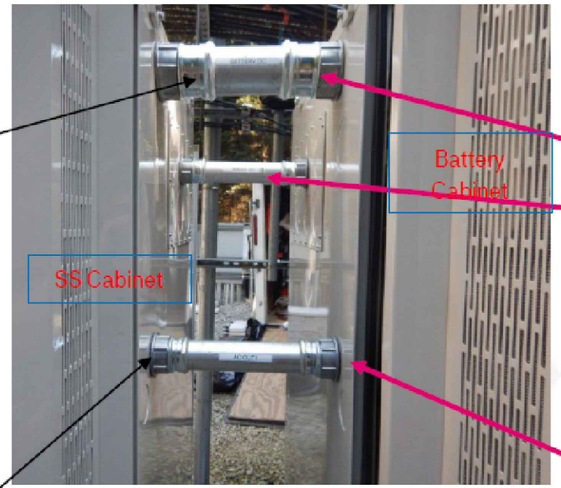

Battery cables terminated at LB3 Battery terminals.

DC and Alarm cable routed thru a 2-inch conduit

AC output routed towards the battery cabinet to power up Heaters in a 2-inch Conduit

AC wire penetration into Battery cabinet

A 3" conduit with an LL is used to run the 3/0 wire to the PPC for the 200A breaker

A 2" conduit with an LB is used to run the 2 AWG wire to the PPC for the 100A breaker

T-Mobile Confidential

T-Mobile
PLAN·PROCURE·DEVELOP

1 **EQUIPMENT DETAILS**

SCALE: N.T.S.

VENDOR:

5.d.a

T-Mobile
4533 ENTERPRISE DR
OKLAHOMA CITY OK 73128

Branch COMMUNICATIONS
A SOLUTIONS PROVIDER
BRANCH COMMUNICATIONS
7335 SOUTH LEWIS AVE. STE. 300
TULSA, OKLAHOMA 74136
(918) 949-4551

PRODUCED BY:
Branch ENGINEERING LLC.
A SOLUTIONS PROVIDER
BRANCH ENGINEERING LLC
7335 SOUTH LEWIS AVE. STE. 300
TULSA, OKLAHOMA 74136
(918) 949-4551
COA. 8525 EXP. 06/30/2024

SITE NAME:
OK03XC315

SITE NUMBER:
OK01538A

SITE ADDRESS:
1800 BLK WESTMINSTER
NICHOLS HILLS OK 73120

ENGINEER:
LICENSED PROFESSIONAL ENGINEER
JEROD R DOTSON
27779
OKLAHOMA
7/14/
PE # 27779 EXP. 12/31/2023

NO	DATE	DESCRIPTION	B
A	01/25/22	PRELIMINARY ISSUE	BI
B	02/18/22	PRELIMINARY ISSUE	BI
C	04/08/22	PRELIMINARY ISSUE	BI
0	06/03/22	CONSTRUCTION ISSUE	BI
1	07/14/22	CONSTRUCTION ISSUE	B

SHEET TITLE:
EQUIPMENT DETAILS

SHEET NUMBER: C13
PROJECT #: OK01538A
BY: BDH
CKD BY: BDH
REVISIO 1

Attachment: PC-2022-05 PACKET (5953 : T-Mobile - Special Permit Application)

T-Mobile_OK_Consolidation_OK01538A-OK03XC315_021822.dwg – Sheet:C13 – User: Brian.Heimbach – Jul 14, 2022 – 2:39pm

BATTERY CABLE CONNECTION/ROUTE

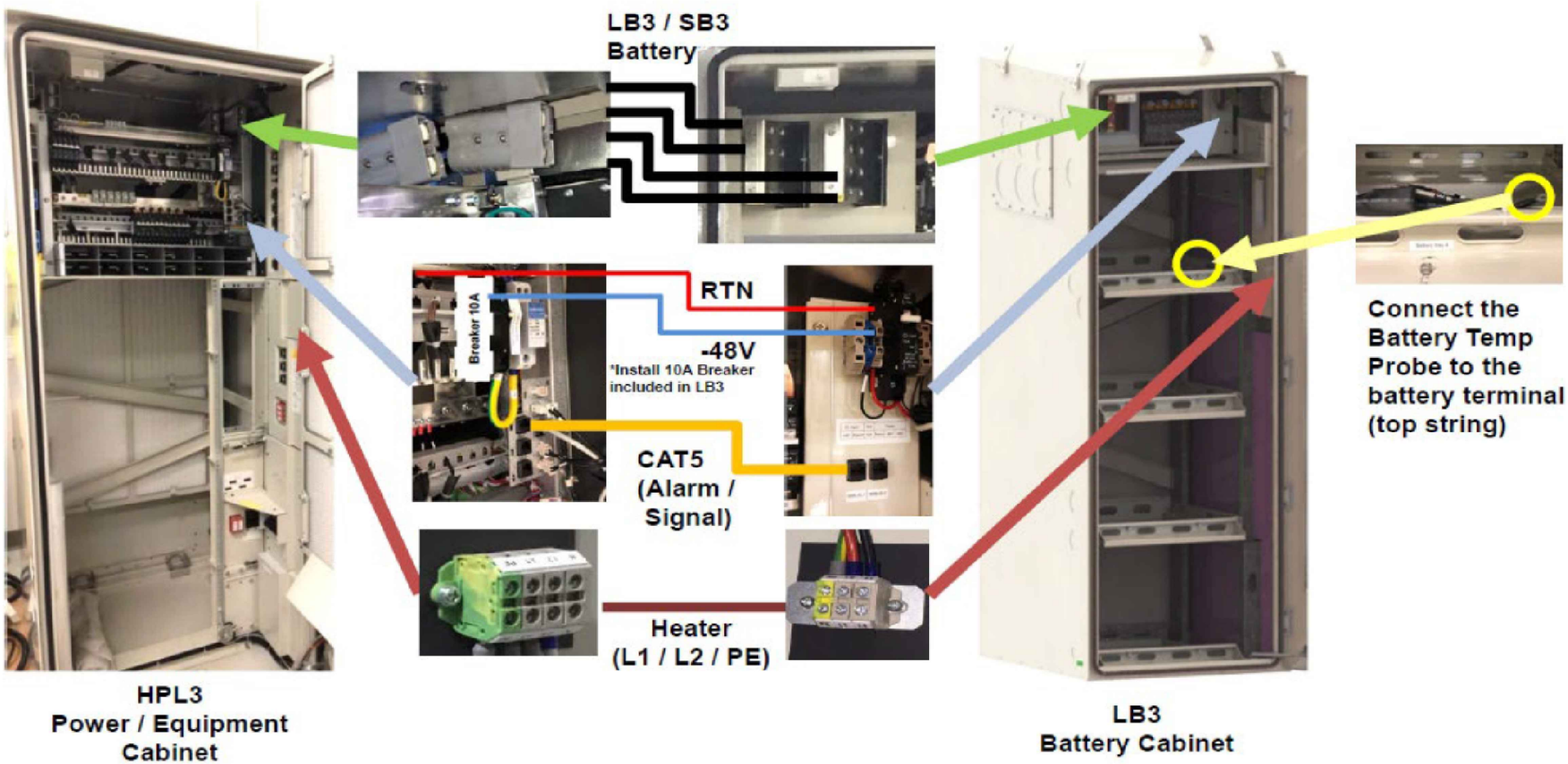

T-Mobile Confidential

T-Mobile
PLAN·PROCURE·DEVELOP

1 EQUIPMENT DETAILS

SCALE: N.T.S.

VENDOR:

T-Mobile
4533 ENTERPRISE DR
OKLAHOMA CITY OK 73128

Branch COMMUNICATIONS
A SOLUTIONS PROVIDER
BRANCH COMMUNICATIONS
7335 SOUTH LEWIS AVE. STE. 300
TULSA, OKLAHOMA 74136
(918) 949-4551

PRODUCED BY:

Branch ENGINEERING LLC.
A SOLUTIONS PROVIDER
BRANCH ENGINEERING LLC
7335 SOUTH LEWIS AVE. STE. 300
TULSA, OKLAHOMA 74136
(918) 949-4551
COA. 8525 EXP. 06/30/2024

SITE NAME:
OK03XC315

SITE NUMBER:
OK01538A

SITE ADDRESS:
1800 BLK WESTMINSTER
NICHOLS HILLS OK 73120

ENGINEER:

LICENSED PROFESSIONAL ENGINEER
JEROD R DOTSON
27779
OKLAHOMA
7/14/2

PE # 27779 EXP. 12/31/2023

NO	DATE	DESCRIPTION	B
A	01/25/22	PRELIMINARY ISSUE	BI
B	02/18/22	PRELIMINARY ISSUE	BI
C	04/08/22	PRELIMINARY ISSUE	BI
0	06/03/22	CONSTRUCTION ISSUE	BI
1	07/14/22	CONSTRUCTION ISSUE	B

SHEET TITLE:
EQUIPMENT DETAILS

SHEET NUMBER:	PROJECT #: OK01538A		REVISIO
C14	BY: BDH	CKD BY: BDH	1

Attachment: PC-2022-05 PACKET (5953 : T-Mobile - Special Permit Application)

T-Mobile_OK_Consolidation_OK01538A-OK03XC315_021822.dwg – Sheet:C14 – User: Brian.Heimbach – Jul 14, 2022 – 2:39pm

DC BREAKER ASSIGNMENTS

Delta HPL3 Upper Distribution Shelf			
		Non-Boosted	
CB Slot	Usage	Breaker	Usage
1	Load-Breakers Baseband and Transport	25A	Baseband #1
2		25A	
3		25A	Baseband #2
4		25A	
5		25A	Baseband #3
6		25A	
7		25A	Baseband #4
8		25A	
9			
10			
11			
12			
13			
14			
15			
16			
17			
18			
19			
20			
21			
22			
23			
24			
25			
26			
27		10A	IXR-e PSU 1
28		10A	IXR-e PSU 2
29		10A	AAV
30			
31			
32	Cabinets	Reserved for Cabinets	
33		Reserved for Cabinets	
34		10A	Battery Cabinet
35		20A	Cabinet Control

Delta HPL3 Power Shelf

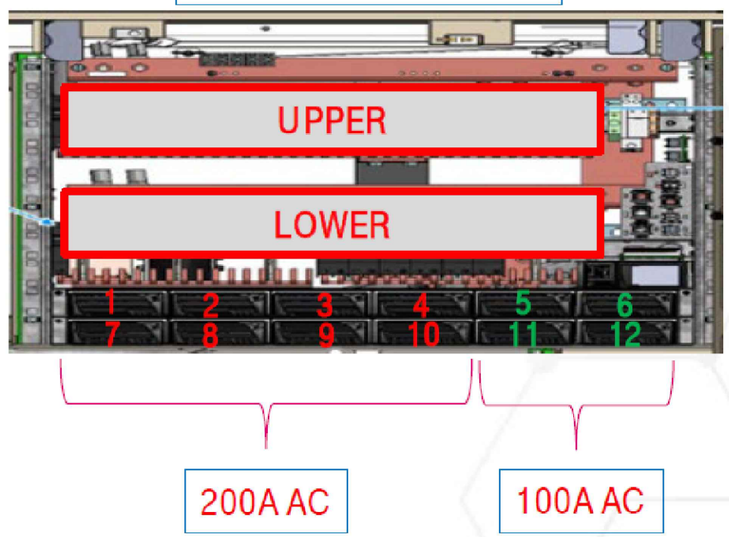

Delta HPL3 Lower Distribution Shelf			
		Non-Boosted	
CB Slot	Usage	Breaker	Usage
1	LVD	2A	LVD
2	Battery Breakers	Unused	
3		Unused	
4		Unused	
5		Unused	
6		Unused	
7		Unused	
8		Unused	
9		Unused	
10		Unused	
11		Unused	
12		Unused	
13		Unused	
14		Unused	
15		Unused	
16		Unused	
17		Unused	
18	Load-Breakers for Radios, Hybrids and Boosters	100A	Hybrid #1 (eg. HCS 2.0)
19		100A	
20		100A	
21		Reserved empty	
22		200	Hybrid #2 (eg. HCS 1.0)
23			
24		empty	
25		Reserved empty	
26		200	Hybrid #2 (eg. HCS 1.0)
27			
28		empty	
29		Reserved empty	
30			
31			
32			
33			
34			
35			

T-Mobile Confidential

T-Mobile
PLAN·PROCURE·DEVELOP

1 EQUIPMENT DETAILS

SCALE: N.T.S.

T-Mobile OK Consolidation OK01538A–OK03XC315 021822.dwg – Sheet:C15 – User: Brian.Heimbach – Jul 14, 2022 – 2:39pm

5.d.a

VENDOR:

T-Mobile
4533 ENTERPRISE DR
OKLAHOMA CITY OK 73128

Branch COMMUNICATIONS
A SOLUTIONS PROVIDER
BRANCH COMMUNICATIONS
7335 SOUTH LEWIS AVE. STE. 300
TULSA, OKLAHOMA 74136
(918) 949–4551

PRODUCED BY:

Branch ENGINEERING LLC.
A SOLUTIONS PROVIDER
BRANCH ENGINEERING LLC
7335 SOUTH LEWIS AVE. STE. 300
TULSA, OKLAHOMA 74136
(918) 949–4551

COA. 8525 EXP. 06/30/2024

SITE NAME:
OK03XC315

SITE NUMBER:
OK01538A

SITE ADDRESS:
1800 BLK WESTMINSTER
NICHOLS HILLS OK 73120

ENGINEER:
LICENSED PROFESSIONAL ENGINEER
JEROD R DOTSON
27779
OKLAHOMA
7/14/2
PE # 27779 EXP. 12/31/2023

NO	DATE	DESCRIPTION	B
A	01/25/22	PRELIMINARY ISSUE	BI
B	02/18/22	PRELIMINARY ISSUE	BI
C	04/08/22	PRELIMINARY ISSUE	BI
0	06/03/22	CONSTRUCTION ISSUE	BI
1	07/14/22	CONSTRUCTION ISSUE	B

SHEET TITLE:
EQUIPMENT DETAILS

SHEET NUMBER:	PROJECT #:		REVISIO
C15	OK01538A		1
	BY: BDH	CKD BY: BDH	

Attachment: PC-2022-05 PACKET (5953 : T-Mobile - Special Permit Application)

IXRE POWER CONFIGURATION (SKU 34097)

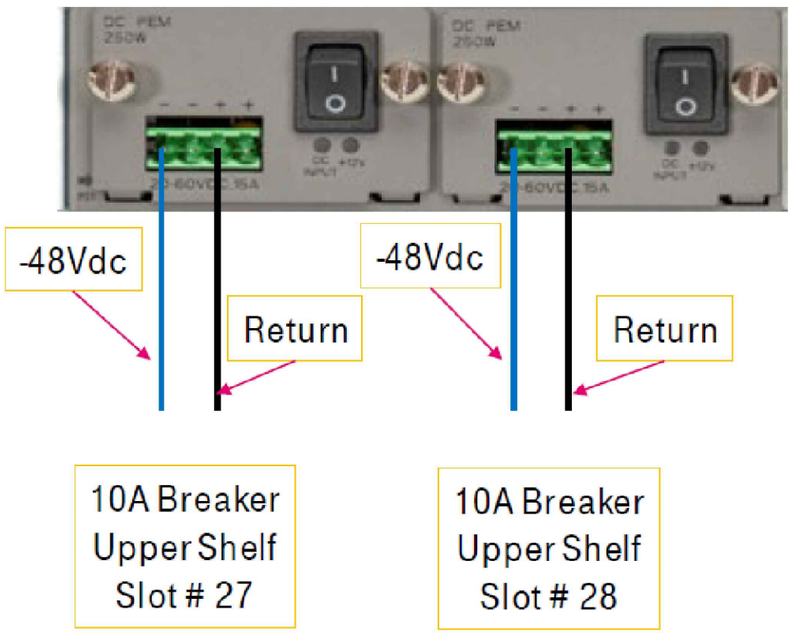

Delta HPL3 Upper Distribution Shelf			
		Non-Boosted	
CB Slot	Usage	Breaker	Usage
1	Load-Breakers Baseband and Transport	25A	Baseband #1
2		25A	
3		25A	Baseband #2
4		25A	
5		25A	Baseband #3
6		25A	
7		25A	Baseband #4
8		25A	
9			
10			
11			
12			
13			
14			
15			
16			
17			
18			
19			
20			
21			
22			
23			
24			
25			
26			
27		10A	IXR-e PSU 1
28		10A	IXR-e PSU 2
29		10A	AAV
30			
31			
32	Cabinets	Reserved for Cabinets	
33		Reserved for Cabinets	
34		10A	Battery Cabinet
35		20A	Cabinet Control

T-Mobile Confidential

T-Mobile
PLAN·PROCURE·DEVELOP

1 **EQUIPMENT DETAILS**
SCALE: N.T.S.

5.d.a

VENDOR:
T-Mobile
4533 ENTERPRISE DR
OKLAHOMA CITY OK 73128

Branch COMMUNICATIONS
A SOLUTIONS PROVIDER
BRANCH COMMUNICATIONS
7335 SOUTH LEWIS AVE. STE. 300
TULSA, OKLAHOMA 74136
(918) 949-4551

PRODUCED BY:
Branch ENGINEERING LLC.
A SOLUTIONS PROVIDER
BRANCH ENGINEERING LLC
7335 SOUTH LEWIS AVE. STE. 300
TULSA, OKLAHOMA 74136
(918) 949-4551
COA. 8525 EXP. 06/30/2024

SITE NAME:
OK03XC315

SITE NUMBER:
OK01538A

SITE ADDRESS:
1800 BLK WESTMINSTER
NICHOLS HILLS OK 73120

ENGINEER:
LICENSED PROFESSIONAL ENGINEER
JEROD R DOTSON
27779
OKLAHOMA
7/14/2
PE # 27779 EXP. 12/31/2023

NO	DATE	DESCRIPTION	B
A	01/25/22	PRELIMINARY ISSUE	BI
B	02/18/22	PRELIMINARY ISSUE	BI
C	04/08/22	PRELIMINARY ISSUE	BI
0	06/03/22	CONSTRUCTION ISSUE	BI
1	07/14/22	CONSTRUCTION ISSUE	B

SHEET TITLE:
EQUIPMENT DETAILS

SHEET NUMBER:	PROJECT #: OK01538A		REVISI
C16	BY: BDH	CKD BY: BDH	1

Attachment: PC-2022-05 PACKET (5953 : T-Mobile - Special Permit Application)

T-Mobile_OK_Consolidation_OK01538A-OK03XC315_021822.dwg - Sheet:C16 - User: Brian.Heimbach - Jul 14, 2022 - 2:39pm

DC CABLE ROUTING

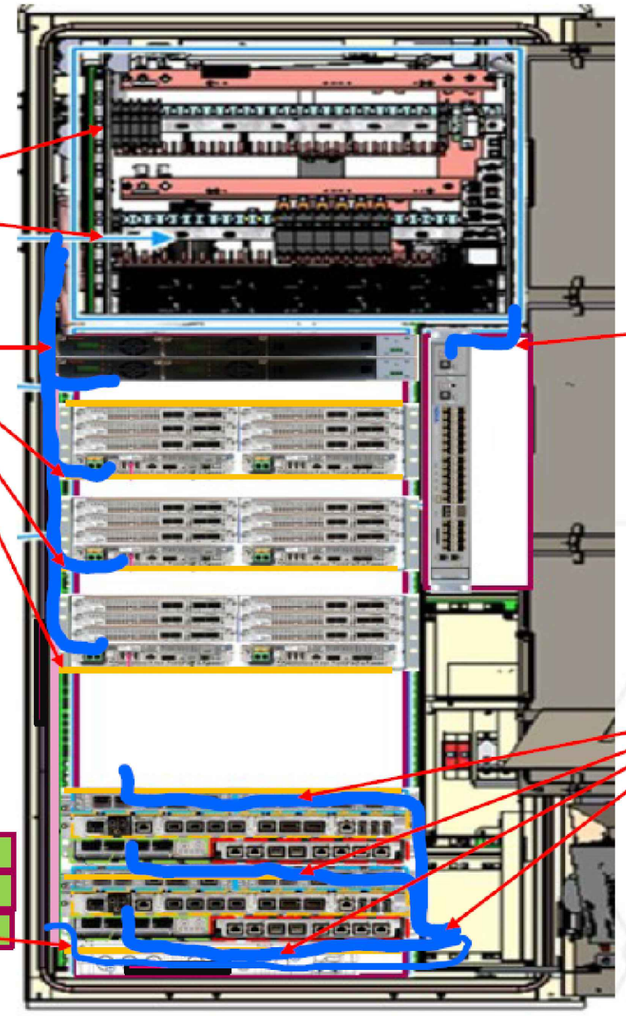

DC Breakers

Airscale DC Cable route

DC cables for the Airscale basebands are to be routed from lower left side of the rectifier shelf and down to each of the basebands. These cables are to be dressed properly to the provided management bar on the left side.

LBs
- For PPC Alarm Cable
- Ethernet/Fiber from CIENA
- For CIENA DC Power

DC Wire to CIENA routed at the bottom of the cabinet into the access panel

CSR/AAV DC Wires

DC wires for the CSR and AAV equipment (CIENA) are to be routed at the bottom right side of the rectifier shelf. This assumes that the CIENA is installed in the cabinet. In cases where the CIENA is installed externally, the DC cable is routed at the right side back of the cabinet and all the way down to the right bottom access panel.

Legacy BB DC Cable Route

Right Bottom access panel will be utilized to route DC power cables for Legacy Basebands. These cables will be routed at the back of the cabinet, down to the access panel.

T-Mobile Confidential

T-Mobile
PLAN-PROCURE-DEVELOP

1 EQUIPMENT DETAILS

SCALE: N.T.S.

T-Mobile OK Consolidation OK01538A-OK03XC315 021822.dwg – Sheet:C17 – User: Brian.Heimbach – Jul 14, 2022 – 2:39pm

5.d.a

VENDOR:

T-Mobile
4533 ENTERPRISE DR
OKLAHOMA CITY OK 73128

Branch COMMUNICATIONS
A SOLUTIONS PROVIDER
BRANCH COMMUNICATIONS
7335 SOUTH LEWIS AVE. STE. 300
TULSA, OKLAHOMA 74136
(918) 949-4551

PRODUCED BY:
Branch ENGINEERING LLC.
A SOLUTIONS PROVIDER
BRANCH ENGINEERING LLC
7335 SOUTH LEWIS AVE. STE. 300
TULSA, OKLAHOMA 74136
(918) 949-4551
COA. 8525 EXP. 06/30/2024

SITE NAME:
OK03XC315

SITE NUMBER:
OK01538A

SITE ADDRESS:
1800 BLK WESTMINSTER
NICHOLS HILLS OK 73120

ENGINEER:
LICENSED PROFESSIONAL ENGINEER
JEROD R DOTSON
27779
OKLAHOMA
7/14/2
PE # 27779 EXP. 12/31/2023

NO	DATE	DESCRIPTION	B
A	01/25/22	PRELIMINARY ISSUE	BI
B	02/18/22	PRELIMINARY ISSUE	BI
C	04/08/22	PRELIMINARY ISSUE	BI
0	06/03/22	CONSTRUCTION ISSUE	BI
1	07/14/22	CONSTRUCTION ISSUE	B

SHEET TITLE:
EQUIPMENT DETAILS

SHEET NUMBER:	PROJECT #: OK01538A		REVISIO
C17	BY: BDH	CKD BY: BDH	1

Attachment: PC-2022-05 PACKET (5953 : T-Mobile - Special Permit Application)

FIBER CABLE ROUTE

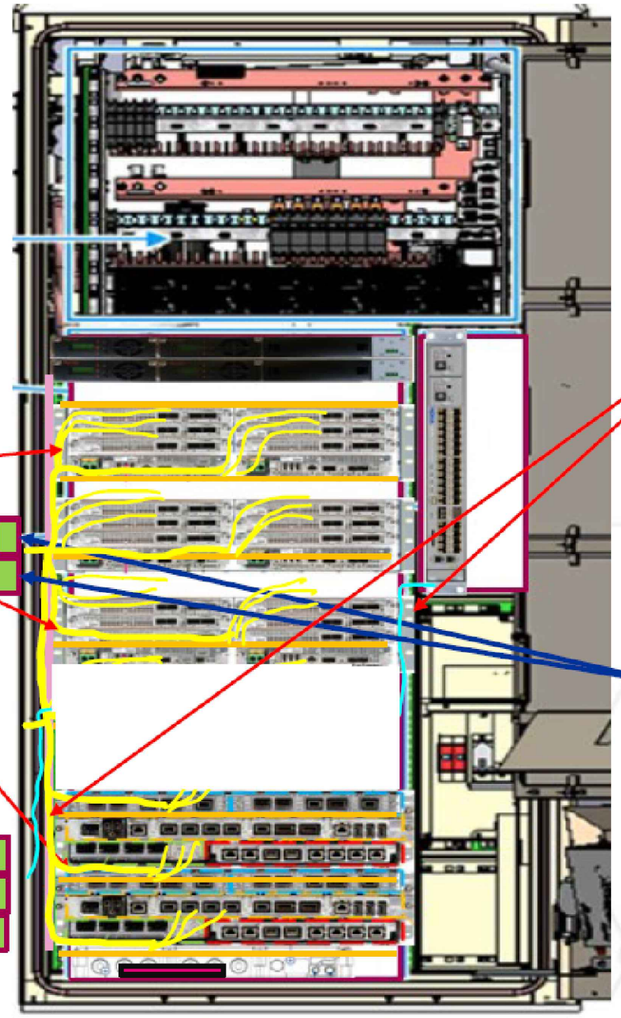

Secondary/Additional Fiber Entry

If primary port hole entry is fully utilized and has reached its capacity, use this as an additional fiber entry port

Fibers

Fibers are to be dressed to the management bars using Velcro straps

Primary Fiber Entry

This is where bottom fibers will be routed from the COVP.

LBs

- For PPC Alarm Cable
- Ethernet/Fiber from CIENA
- For CIENA DC Power

Ethernet or Fiber for AAV

Ethernet or Fiber route that comes from our CIENA (if the AAV circuit is installed outside of the cabinet.

IMPORTANT NOTE

Routing the fiber cable inside the cabinet varies based on installation location. To protect the fibers from being damaged by small animals / insects, it is strongly recommended that fibers be placed in a 2" flexible conduit using an LL at the knockouts.

T-Mobile Confidential

T-Mobile
PLAN·PROCURE·DEVELOP

1 **EQUIPMENT DETAILS**
SCALE: N.T.S.

T-Mobile OK Consolidation OK01538A-OK03XC315 021822.dwg - Sheet:C18 - User: Brian.Heimbach - Jul 14, 2022 - 2:39pm

5.d.a

VENDOR:
T-Mobile
4533 ENTERPRISE DR
OKLAHOMA CITY OK 73128

Branch COMMUNICATIONS
A SOLUTIONS PROVIDER
BRANCH COMMUNICATIONS
7335 SOUTH LEWIS AVE. STE. 300
TULSA, OKLAHOMA 74136
(918) 949-4551

PRODUCED BY:
Branch ENGINEERING LLC.
A SOLUTIONS PROVIDER
BRANCH ENGINEERING LLC
7335 SOUTH LEWIS AVE. STE. 300
TULSA, OKLAHOMA 74136
(918) 949-4551
COA. 8525 EXP. 06/30/2024

SITE NAME:
OK03XC315

SITE NUMBER:
OK01538A

SITE ADDRESS:
1800 BLK WESTMINSTER
NICHOLS HILLS OK 73120

ENGINEER:
LICENSED PROFESSIONAL ENGINEER
JEROD R DOTSON
27779
OKLAHOMA
7/14/2
PE # 27779 EXP. 12/31/2023

NO	DATE	DESCRIPTION	B
A	01/25/22	PRELIMINARY ISSUE	BI
B	02/18/22	PRELIMINARY ISSUE	BI
C	04/08/22	PRELIMINARY ISSUE	BI
0	06/03/22	CONSTRUCTION ISSUE	BI
1	07/14/22	CONSTRUCTION ISSUE	B

SHEET TITLE:
EQUIPMENT DETAILS

SHEET NUMBER:	PROJECT #: OK01538A		REVISIO
C18	BY: BDH	CKD BY: BDH	1

Attachment: PC-2022-05 PACKET (5953 : T-Mobile - Special Permit Application)

BACK UP SLIDES

Junction box install – If there is really a need to install an external junction box for the following reasons:

a. One single point of entry from multiple COVP.
b. Any external cable entry to the HPL3 – GPS, Alarm cables from PPC and FSEB/EE
c. Can also be used to house excess bottom fibers as there is not enough room inside the HPL3 cabinet specially when there's multiple baseband and COVP is installed.

Suggestion:

To install a 12x12x6 junction box at the bottom of the EACH COVP WHERE IT will be utilized as an egress point of all cables.

BUT NEVER:

Install or attach a junction box at either side of the cabinet as this will make it extremely difficult to expand the cabinet footprint on-site. Standard cabinet separation is only 8". Given this, the junction box could not be opened if / when Recap an expansion cabinet is in place.

DALLAS SOA INSTALL

T-Mobile
PLAN·PROCURE·DEVELOP

T-Mobile Confidential

1 **EQUIPMENT DETAILS**
SCALE: N.T.S.

T-Mobile OK Consolidation OK01538A-OK03XC315 021822.dwg – Sheet:C19 – User: Brian.Heimbach – Jul 14, 2022 – 2:39pm

5.d.a

VENDOR:
T-Mobile
4533 ENTERPRISE DR
OKLAHOMA CITY OK 73128

Branch COMMUNICATIONS
A SOLUTIONS PROVIDER
BRANCH COMMUNICATIONS
7335 SOUTH LEWIS AVE. STE. 300
TULSA, OKLAHOMA 74136
(918) 949-4551

PRODUCED BY:
Branch ENGINEERING LLC.
A SOLUTIONS PROVIDER
BRANCH ENGINEERING LLC
7335 SOUTH LEWIS AVE. STE. 300
TULSA, OKLAHOMA 74136
(918) 949-4551
COA. 8525 EXP. 06/30/2024

SITE NAME:
OK03XC315

SITE NUMBER:
OK01538A

SITE ADDRESS:
1800 BLK WESTMINSTER
NICHOLS HILLS OK 73120

ENGINEER:
LICENSED PROFESSIONAL ENGINEER
JEROD R DOTSON
27779
OKLAHOMA
7/14/
PE # 27779 EXP. 12/31/2023

NO	DATE	DESCRIPTION	B
A	01/25/22	PRELIMINARY ISSUE	BI
B	02/18/22	PRELIMINARY ISSUE	BI
C	04/08/22	PRELIMINARY ISSUE	BI
0	06/03/22	CONSTRUCTION ISSUE	BI
1	07/14/22	CONSTRUCTION ISSUE	B

SHEET TITLE:
EQUIPMENT DETAILS

SHEET NUMBER:	PROJECT #: OK01538A		REVISIO
C19	BY: BDH	CKD BY: BDH	1

Attachment: PC-2022-05 PACKET (5953 : T-Mobile - Special Permit Application)

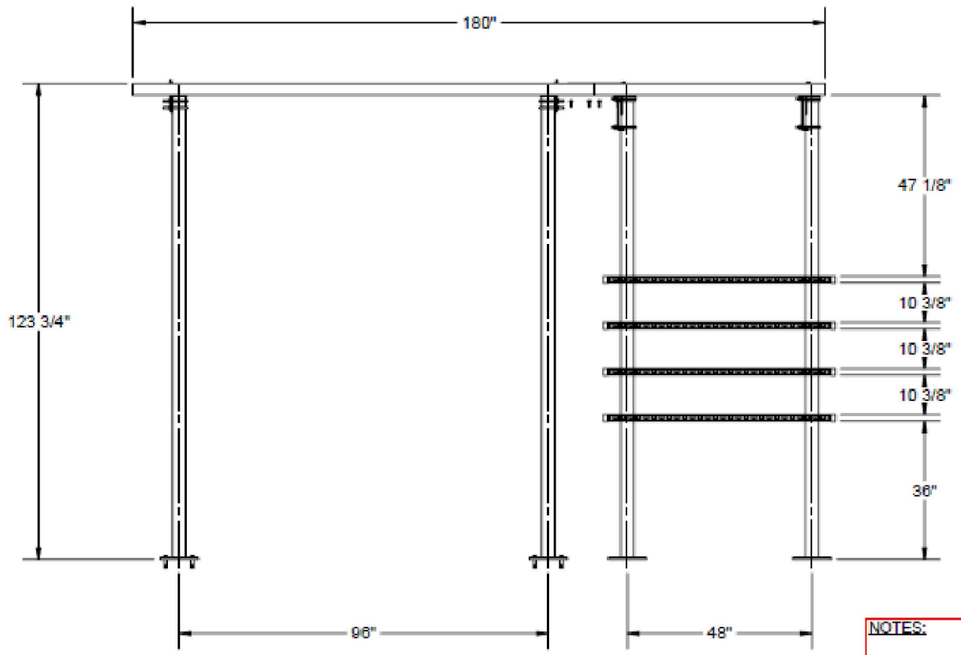

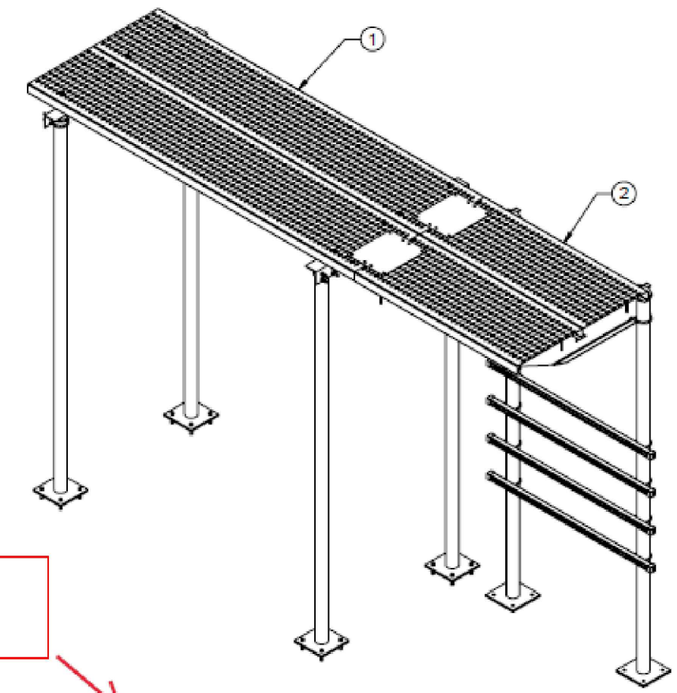

NOTES:

CAN BE ASSEMBLED AS SHOWN

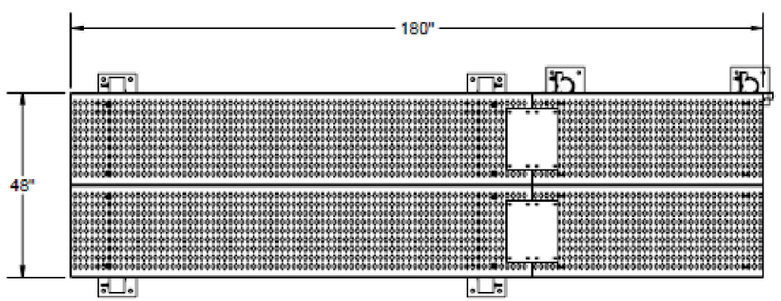

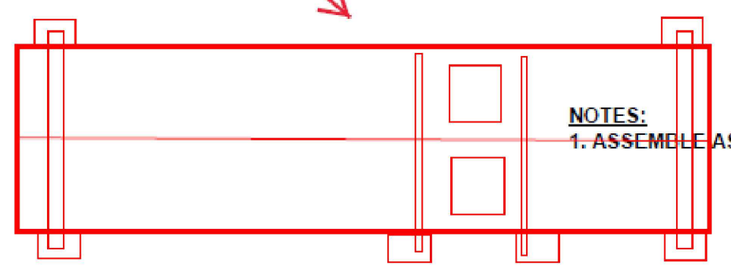

NOTES:
1. ASSEMBLE AS SHOWN

ITEM NO.	PART NUMBER	DESCRIPTION	QTY.
1	2165-48ICF	4 POLE 48" WIDE ICE BRIDGE CANOPY	1
2	2164-48IC-EXT	2 POLE 48" WIDE ICE BRIDGE EXTENSION	1

UNLESS OTHERWISE SPECIFIED DIMENSIONS ARE IN INCHES. TOLERANCES ARE:
FRACTIONS ± 1/32 DECIMALS .XX ± .XX .XXX ± .XXX ANGLES ± 1°
7/23/2021

FINISH H.D.G

DO NOT SCALE DRAWING

MATERIAL PROD# SEE B.O.M.

APPROVALS		DATE
DRAWN	AV	07/23/21
CHECKED		
ENGR.		
ISSUED		
MANUFACT.		

ALT
800-950-7960
FAX 940-455-2817
www.altfabrication.com
sales@altfabrication.com
122 Leesley Lane
Argyle, Texas
76226

TITLE: CUSTOM ICE BRIDGE

SIZE B | DWG. NO. 48ICF AND EXT | REV. A

SCALE: NTS | WEIGHT 911.9609 | SHEET 1 OF 3

1 **4 POLE 48" WIDE ICE BRIDGE CANOPY KIT**

SCALE: N.T.S.

VENDOR:

T-Mobile
4533 ENTERPRISE DR
OKLAHOMA CITY OK 73128

Branch COMMUNICATIONS
A SOLUTIONS PROVIDER
BRANCH COMMUNICATIONS
7335 SOUTH LEWIS AVE. STE. 300
TULSA, OKLAHOMA 74136
(918) 949-4551

PRODUCED BY:

Branch ENGINEERING LLC.
A SOLUTIONS PROVIDER
BRANCH ENGINEERING LLC
7335 SOUTH LEWIS AVE. STE. 300
TULSA, OKLAHOMA 74136
(918) 949-4551

COA. 8525 EXP. 06/30/2024

SITE NAME:
OK03XC315

SITE NUMBER:
OK01538A

SITE ADDRESS:
1800 BLK WESTMINSTER
NICHOLS HILLS OK 73120

ENGINEER:

LICENSED PROFESSIONAL ENGINEER
JEROD R DOTSON
27779
OKLAHOMA
7/14/2

PE # 27779 EXP. 12/31/2023

NO	DATE	DESCRIPTION	B
A	01/25/22	PRELIMINARY ISSUE	BI
B	02/18/22	PRELIMINARY ISSUE	BI
C	04/08/22	PRELIMINARY ISSUE	BI
0	06/03/22	CONSTRUCTION ISSUE	BI
1	07/14/22	CONSTRUCTION ISSUE	B

SHEET TITLE:
EQUIPMENT DETAILS

SHEET NUMBER: C20 | PROJECT #: OK01538A | BY: BDH | CKD BY: BDH | REVISIO 1

T-Mobile OK Consolidation OK01538A-OK03XC315 021822.dwg – Sheet:C20 – User: Brian.Heimbach – Jul 14, 2022 – 2:39pm

Attachment: PC-2022-05 PACKET (5953 : T-Mobile - Special Permit Application)

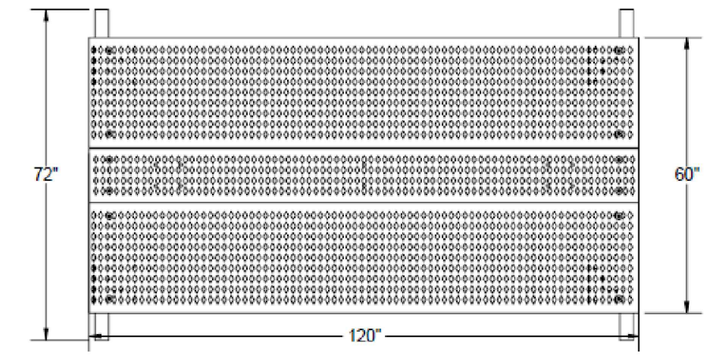

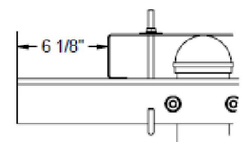

DETAIL B

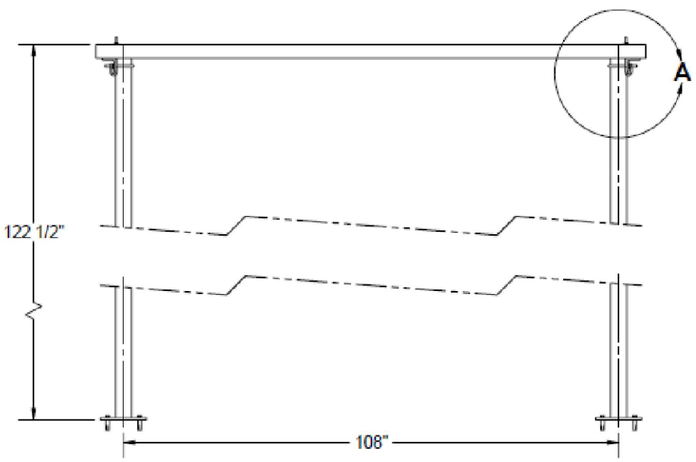

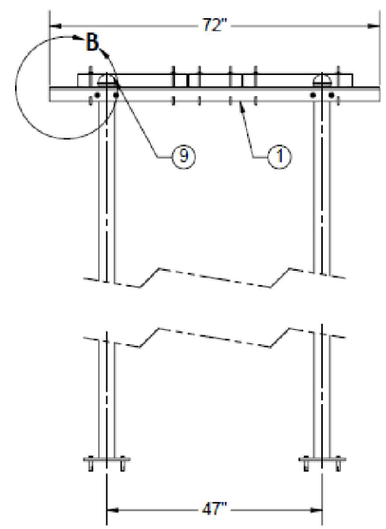

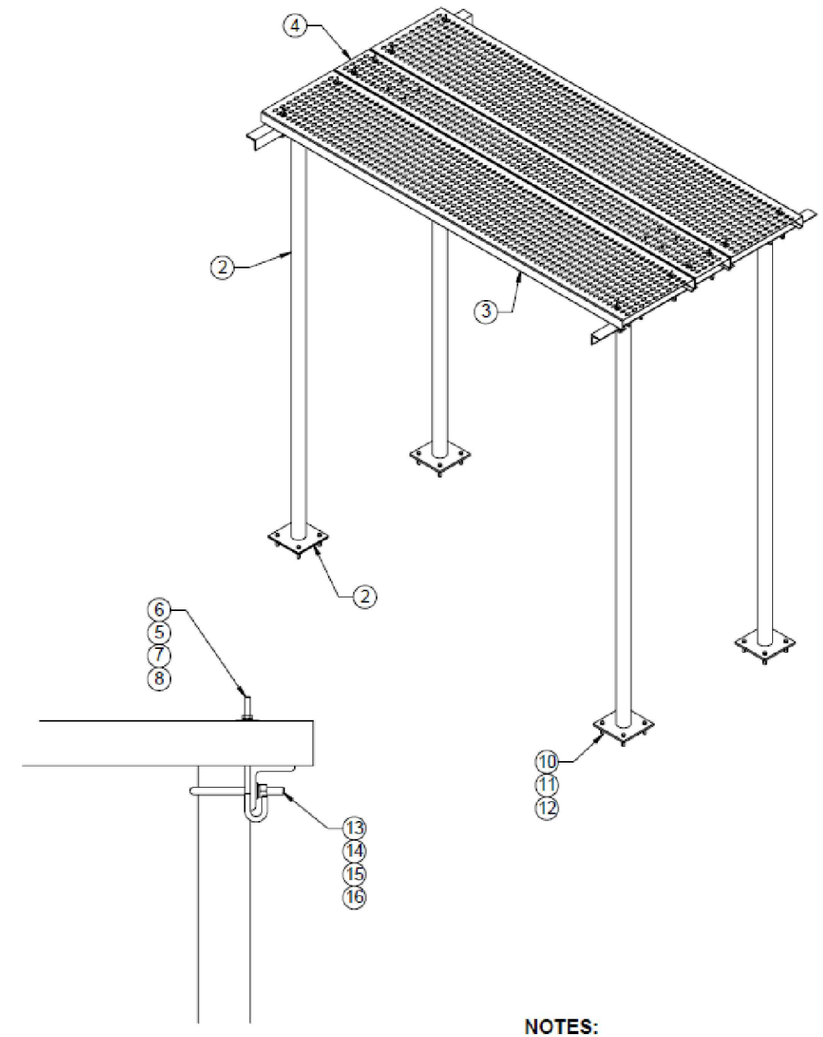

DETAIL A

NOTES:
1. ASSEMBLE AS SHOWN

ITEM NO.	QTY.	PART NO.	DESCRIPTION
1	2	7000-2165-72L	SUPPORT ANGLE
2	4	7000-2164-7-10	3-1/2" OD X 10' GALV LEG W/ FT
3	2	2160-24-31012HDG	GRIP STRUT, 3" X 24" X 10' LONG
4	1	2160-12-31012HDG	GRIP STRUT, 3" X 12" X 10' LONG
5	12	4620G-BULK	NUT, 3/8" HEX, GALV
6	12	4480G	J-BOLT, 3/8" X 8"
7	12	4720FG-BULK	3/8" FENDER WASHER
8	12	4724G-BULK	3/8" LOCK WASHER, GALV
9	4	5202-3	POST CAP, 3-1/2" OD PIPE
10	16	4830HD	1/2" DROP IN ANCHOR HEAVY DUTY
11	16	4454-BULK	BOLT, 1/2" X 1-1/2" LG HEX, SST TAP
12	16	4754-BULK	1/2" LOCKWASHER, SS
13	4	4499G	U-BOLT, 3 1/2" OD PIPE, 1/2" DIA.
14	8	4650G-BULK	NUT, 1/2" HEX, GALV
15	8	4754G-BULK	1/2" GALV LOCK WASHER
16	8	4750G-BULK	WASHER, 1/2" NARROW, GALV

FINISH HDG

MATERIAL PROD# SEE B.O.M.

DO NOT SCALE DRAWING

UNLESS OTHERWISE SPECIFIED DIMENSIONS ARE IN INCHES. TOLERANCES ARE:
FRACTIONS ±1/32 DECIMALS .XX ±.XX .XXX ±.XXX ANGLES ±1°
4/19/2021

THE INFORMATION CONTAINED IN THIS DRAWING IS THE SOLE PROPERTY OF allG. ANY REPRODUCTION IN PART OR WHOLE WITHOUT THE WRITTEN PERMISSION OF allG IS PROHIBITED.

APPROVALS		DATE
DRAWN	AV	12/07/20
CHECKED		
ENGR.		
ISSUED		
MANUFACT.		

allG FABRICATION
800-950-7960
FAX 940-455-2917
www.allfabrication.com
sales@allfabrication.com
122 Leesley Lane
Argyle, Texas
76226

TITLE: 5' X 10' ICE CANOPY W/ FEET

SIZE B | DWG. NO. 2165-60ICF | REV. A

SCALE: NTS | WEIGHT 633.12 | SHEET 1 OF 1

1 **4 POLE 5'-0" WIDE ICE BRIDGE CANOPY KIT ABOVE GENERATOR**

SCALE: N.T.S.

VENDOR:

T-Mobile
4533 ENTERPRISE DR
OKLAHOMA CITY OK 73128

Branch COMMUNICATIONS
A SOLUTIONS PROVIDER
BRANCH COMMUNICATIONS
7335 SOUTH LEWIS AVE. STE. 300
TULSA, OKLAHOMA 74136
(918) 949-4551

PRODUCED BY:

Branch ENGINEERING LLC.
A SOLUTIONS PROVIDER
BRANCH ENGINEERING LLC
7335 SOUTH LEWIS AVE. STE. 300
TULSA, OKLAHOMA 74136
(918) 949-4551

COA. 8525 EXP. 06/30/2024

SITE NAME:
OK03XC315

SITE NUMBER:
OK01538A

SITE ADDRESS:
1800 BLK WESTMINSTER
NICHOLS HILLS OK 73120

ENGINEER:

LICENSED PROFESSIONAL ENGINEER
JEROD R DOTSON
27779
OKLAHOMA
7/14/2

PE # 27779 EXP. 12/31/2023

NO	DATE	DESCRIPTION	B
A	01/25/22	PRELIMINARY ISSUE	BI
B	02/18/22	PRELIMINARY ISSUE	BI
C	04/08/22	PRELIMINARY ISSUE	BI
0	06/03/22	CONSTRUCTION ISSUE	BI
1	07/14/22	CONSTRUCTION ISSUE	B

SHEET TITLE:
EQUIPMENT DETAILS

SHEET NUMBER: C21 | PROJECT #: OK01538A | BY: BDH | CKD BY: BDH | REVISIO 1

Attachment: PC-2022-05 PACKET (5953 : T-Mobile - Special Permit Application)

T-Mobile OK Consolidation OK01538A-OK03XC315 021822.dwg - Sheet:C21 - User: Brian.Heimbach - Jul 14, 2022 - 2:39pm

RD048 | 3.3L | 48 kW

INDUSTRIAL DIESEL GENERATOR SET

EPA Certified Stationary Emergency

GENERAC | INDUSTRIAL POWER

Model Number
48 kW: G0079600

Standby Power Rating
48 kW, 60 Hz

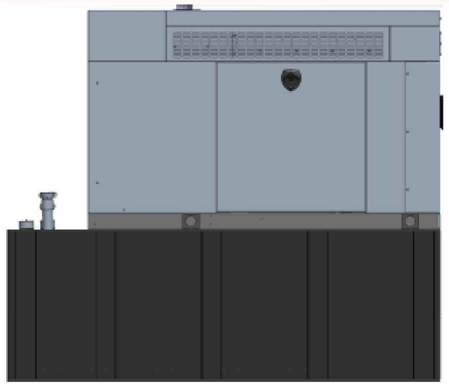

Image used for illustration purposes only

Codes and Standards

Not all codes and standards apply to all configurations. Contact factory for details.

- UL2200, UL6200, UL1236, UL489, UL142
- CSA C22.2, ULC S601
- BS5514 and DIN 6271
- SAE J1349
- NFPA 37, 70, 99
- ISO 3046, 8528, 9001
- NEMA ICS1, ISC10, MG1, 250, ICS6, AB1
- ANSI/IEEE C62.41

Powering Ahead

For over 60 years, Generac has provided innovative design and superior manufacturing. Generac ensures superior quality by designing and manufacturing most of its generator components, including alternators, enclosures and base tanks, control systems and communications software.

Generac gensets utilize a wide variety of options, configurations and arrangements, allowing us to meet the standby power needs of practically every application. Generac searched globally to ensure the most reliable engines power our generators. We choose only engines that have already been proven in heavy-duty industrial applications under adverse conditions.

Generac is committed to ensuring our customers' service support continues after their generator purchase.

RD048 | 3.3L | 48 kW

INDUSTRIAL DIESEL GENERATOR SET

EPA Certified Stationary Emergency

GENERAC | INDUSTRIAL POWER

DIMENSIONS AND WEIGHTS*

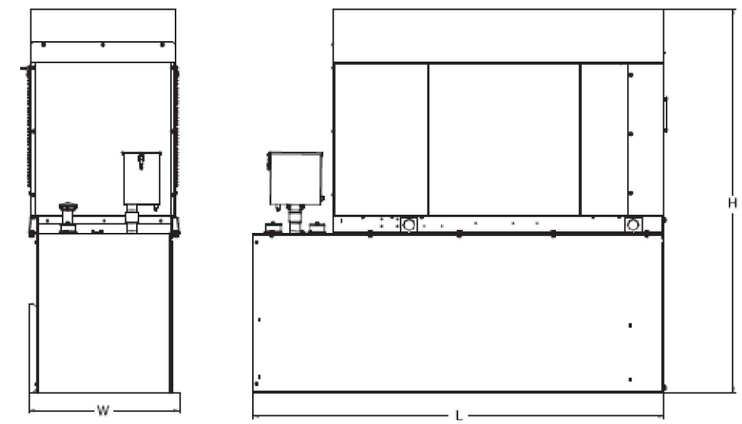

Unit Weight - lbs (kg)	Unit Weight with Skid - lbs (kg)	Dimensions (L x W x H) - in (kg)
2,915 (1,322)	2,954 (1,340)	103.4 (2,625) x 35.0 (888) x 90.0 (2,286)

48 kW Fuel Consumption (gal)	
Fuel Tank Gross Total Capacity	240
Fuel Tank Gross Usable Capacity	229
Fuel Tank Net Usable Capacity (Run Hours Based on Net Usage Capacity)	206
Run Hours at 100% Load	51
Run Hours at 75% Load	68
Run Hours at 50% Load	103

Sound Emission Data	
Rated Load Sound Output at 23 ft - dB (A)	65

* All measurements are approximate and for estimation purposes only. Drawing is for illustration purposes only, not to scale.

YOUR FACTORY RECOGNIZED GENERAC INDUSTRIAL DEALER

Specification characteristics may change without notice. Dimensions and weights are for preliminary purposes only. Please contact a Generac Power Systems Industrial Dealer for detailed installation drawings.

1 **GENERATOR SPECIFICATIONS**

SCALE: N.T.S.

5.d.a

VENDOR:

T-Mobile

4533 ENTERPRISE DR
OKLAHOMA CITY OK 73128

Branch COMMUNICATIONS
A SOLUTIONS PROVIDER

BRANCH COMMUNICATIONS
7335 SOUTH LEWIS AVE. STE. 300
TULSA, OKLAHOMA 74136
(918) 949-4551

PRODUCED BY:

Branch ENGINEERING LLC.
A SOLUTIONS PROVIDER

BRANCH ENGINEERING LLC
7335 SOUTH LEWIS AVE. STE. 300
TULSA, OKLAHOMA 74136
(918) 949-4551

COA. 8525 EXP. 06/30/2024

SITE NAME:
OK03XC315

SITE NUMBER:
OK01538A

SITE ADDRESS:
1800 BLK WESTMINSTER
NICHOLS HILLS OK 73120

ENGINEER:

LICENSED PROFESSIONAL ENGINEER
JEROD R DOTSON
27779
OKLAHOMA

7/14/2

PE # 27779 EXP. 12/31/2023

NO	DATE	DESCRIPTION	B
A	01/25/22	PRELIMINARY ISSUE	B
B	02/18/22	PRELIMINARY ISSUE	B
C	04/08/22	PRELIMINARY ISSUE	B
0	06/03/22	CONSTRUCTION ISSUE	B
1	07/14/22	CONSTRUCTION ISSUE	B

SHEET TITLE:
GENERATOR SPECIFICATIONS

SHEET NUMBER:	PROJECT #: OK01538A		REVISIO
C22	BY: BDH	CKD BY: BDH	1

Attachment: PC-2022-05 PACKET (5953 : T-Mobile - Special Permit Application)

T-Mobile_OK_Consolidation_OK01538A-OK03XC315_021822.dwg – Sheet:C22 – User: Brian.Heimbach – Jul 14, 2022 – 2:39pm

Automatic Transfer Switches

GENERAC

Service and non-Service rated Automatic Smart Transfer Switches

Automatic Transfer Switches 1 of 2

Automatic Transfer Switches 2 of 2

100 - 400 Amps, Single Phase

*CUL only applies to non-service rated switches

Description

Generac Automatic Transfer Switches are designed for use with single phase generators that utilize an Evolution™ or Nexus™ Controller. The 100, 200, and 400 amp open transition switches are available in single phase in both service equipment rated and non-service equipment rated configurations. The 150 and 300 amp open transition switches are only available in a service rated equipment configuration.

Standard Features

Service rated (RXSW) Generac Automatic Transfer Switches are housed in an aluminum NEMA/UL Type 3R enclosure*, with electrostatically applied and baked powder paint. The Heavy Duty Generac Contactor is a UL recognized device, designed for years of service. The controller at the generator handles all the timing, sensing, exercising functions, and transfer commands. All switches are covered by a 5 year limited warranty.

* Non-service rated (RXSC) switches are housed in a steel enclosure.

DPM Technology

Through the use of digital power technology (DPM), these switches have the capability to manage up to 4 individual HVAC (24 VAC controlled) loads with no additional hardware. When used in tandem with Smart Management Modules, up to 8 more loads can be managed as well, providing the most installation efficient power management options available.

GENERAC ISO 9001:2008

GENERAC

100-400 Amps, Single Phase — Automatic Smart Transfer Switches

Functions

All timing and sensing functions originate in the generator controller

Utility voltage drop-out	<65%
Timer to generator start	10 second factory set. adjustable between 2-1500 seconds by a qualified dealer*
Engine warm up delay	5 seconds
Standby voltage sensor	65% for 5 seconds
Utility voltage pickup	>80%
Re-transfer time delay	15 seconds
Engine cool-down timer	60 seconds
Exerciser	5 or 12 minutes adjustable weekly/Bi-weekly/Monthly**

The transfer switch can be operated manually without power applied.

*When used in conjunction with units utilizing Evolution™ controls **Adjustable via the controller

Specifications

Model	RXSC100A3		RXSC200A3
Amps	100		200
Voltage	120/240, 1ø		120/240, 1ø
Load Transition Type (Automatic)	Open Transition		Open Transition
Enclosure Type	NEMA/UL3R		NEMA/UL3R
UL Rating	UL/CUL		UL/CUL
Withstand Rating (Amps)	10,000		10,000
Lug Range	1/0 - #14		250 MCM - #6

Dimensions

Model		RXSC100A3	RXSC200A3
Height (in./mm)	H1	17.24/437.9	17.24/437.9
	H2	20/508	20/508
Width (in./mm)	W1	12.5/317.5	12.5/317.5
	W2	14.6/370.8	14.6/370.8
Depth (in./mm)		7.09/180.1	7.09/180.1
Weight (lbs./kilos)		20/9.07	20/9.07

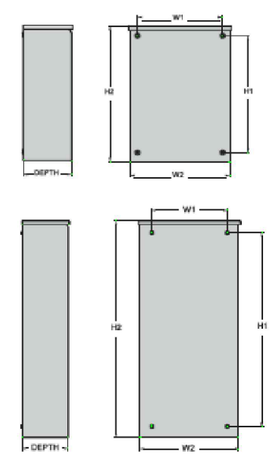

GENERAC

Generac Power Systems, Inc. • S45W29290 HWY. 59, Waukesha, WI 53189 • generac.com
©2017 Generac Power Systems, Inc. All rights reserved. All specifications are subject to change without notice. Bulletin 1000001 3459-A 04/24/17

1 ATS SPECIFICATIONS

SCALE: N.T.S.

5.d.a

VENDOR:

T-Mobile

4533 ENTERPRISE DR
OKLAHOMA CITY OK 73128

Branch COMMUNICATIONS A SOLUTIONS PROVIDER

BRANCH COMMUNICATIONS
7335 SOUTH LEWIS AVE. STE. 300
TULSA, OKLAHOMA 74136
(918) 949-4551

PRODUCED BY:

Branch ENGINEERING LLC. A SOLUTIONS PROVIDER

BRANCH ENGINEERING LLC
7335 SOUTH LEWIS AVE. STE. 300
TULSA, OKLAHOMA 74136
(918) 949-4551

COA. 8525 EXP. 06/30/2024

SITE NAME:
OK03XC315

SITE NUMBER:
OK01538A

SITE ADDRESS:
1800 BLK WESTMINSTER
NICHOLS HILLS OK 73120

ENGINEER:

LICENSED PROFESSIONAL ENGINEER
JEROD R DOTSON
27779
OKLAHOMA

7/14/2

PE # 27779 EXP. 12/31/2023

NO	DATE	DESCRIPTION	E
A	01/25/22	PRELIMINARY ISSUE	BI
B	02/18/22	PRELIMINARY ISSUE	BI
C	04/08/22	PRELIMINARY ISSUE	BI
0	06/03/22	CONSTRUCTION ISSUE	BI
1	07/14/22	CONSTRUCTION ISSUE	BI

SHEET TITLE:
ATS SPECIFICATIONS

SHEET NUMBER:	PROJECT #: OK01538A		REVISIO
C23	BY: BDH	CKD BY: BDH	1

Attachment: PC-2022-05 PACKET (5953 : T-Mobile - Special Permit Application)

T-Mobile_OK_Consolidation_OK01538A-OK03XC315_021822.dwg – Sheet:C23 – User: Brian.Heimbach – Jul 14, 2022 – 2:39pm

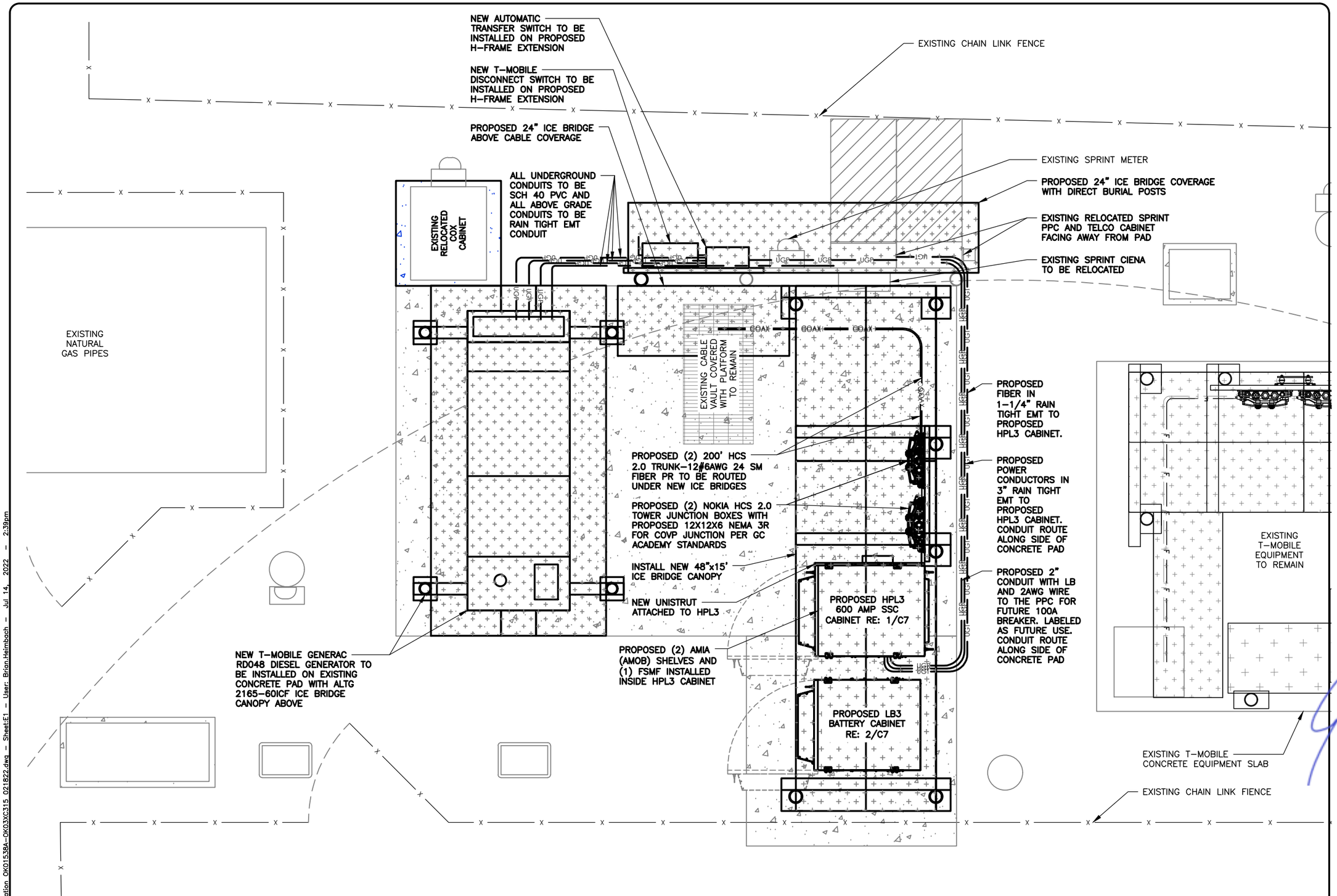

1 EQUIPMENT UTILITY PLAN

SCALE: 0' 1' 5' 10'

VENDOR:

T-Mobile

4533 ENTERPRISE DR
OKLAHOMA CITY OK 73128

Branch COMMUNICATIONS
A SOLUTIONS PROVIDER

BRANCH COMMUNICATIONS
7335 SOUTH LEWIS AVE. STE. 300
TULSA, OKLAHOMA 74136
(918) 949-4551

PRODUCED BY:

Branch ENGINEERING LLC.
A SOLUTIONS PROVIDER

BRANCH ENGINEERING LLC
7335 SOUTH LEWIS AVE. STE. 300
TULSA, OKLAHOMA 74136
(918) 949-4551

COA. 8525 EXP. 06/30/2024

SITE NAME:
OK03XC315

SITE NUMBER:
OK01538A

SITE ADDRESS:
1800 BLK WESTMINSTER
NICHOLS HILLS OK 73120

ENGINEER:

LICENSED PROFESSIONAL ENGINEER
JEROD R DOTSON
27779
OKLAHOMA
7/14/2

PE # 27779 EXP. 12/31/2023

NO	DATE	DESCRIPTION	B
A	01/25/22	PRELIMINARY ISSUE	BI
B	02/18/22	PRELIMINARY ISSUE	BI
C	04/08/22	PRELIMINARY ISSUE	BI
0	06/03/22	CONSTRUCTION ISSUE	BI
1	07/14/22	CONSTRUCTION ISSUE	B

SHEET TITLE: **EQUIPMENT UTILITY PLAN**

SHEET NUMBER:	PROJECT #: OK01538A		REVISIO
E1	BY: BDH	CKD BY: BDH	1

T-Mobile OK Consolidation OK01538A-OK03XC315 021822.dwg – Sheet:E1 – User: Brian.Heimbach – Jul 14, 2022 – 2:39pm

Attachment: PC-2022-05 PACKET (5953 : T-Mobile - Special Permit Application)

CONDUIT NOTE:

- ALL BELOW GRADE CONDUITS TO BE PVC CONDUIT
- ALL ABOVE GRADE CONDUITS TO BE RAIN TIGHT EMT CONDUITS

TYPICAL DIAGRAM CIRCUIT SCHEDULE- FOR REFERENCE ONLY

NO.	FROM	TO	WIRES	GROUND	CONDUIT SIZE	FUNCTION
1	NORMAL POWER SOURCE	ATS	(3) 3/0	(1) #4	3"	NORMAL POWER FEEDER TO ATS
2	GENERATOR	ATS	(3) 3/0	(1) #4	2"	EMERGENCY POWER FEEDER TO ATS
3	ATS	PPC	(3) 3/0	(1) #4	2"	EMERGENCY POWER FEEDER TO PPC
4	ATS	GENERATOR	(2) #10	(1) #12	1"	START CIRCUIT
5	PPC	GENERATOR	(2) #10 (2) #10	(1) #12 (1) #12	1" 1"	CIRCUIT FOR GENERATOR BLOCK HEATER & BATTERY HEATER. CIRCUIT FOR BATTERY CHARGER
6	ALARM BOX	GENERATOR	12–PAIR 24 AWG	N/A	1"	ALARM CABLES (1) 12 PAIR 24 AUG. (RUN INTO ALARM BOX. PROVIDE 24" OF SLACK CABLE. FINAL PUNCH DOWN IS BY T–MOBILE TECH. LABEL ALL WIRES.)

NOTE:
CONTRACTOR TO FOLLOW MANUFACTURER ALARM RECOMMENDATIONS

NOTE:
WIRE AND CONDUIT SIZES SHOWN ARE ASSUMED AND ARE TO BE VERIFIED IN FIELD.

ALARM WIRE IDENTIFICATION CHART

NAME	DESCRIPTION
GF	CRITICAL FAILURE
FL	FUEL LEAK / OVERFILL
GR	GENERATOR RUNNING
LF	LOW FUEL
MAF	MAJOR FAULT
MIF	MINOR FAULT (PRE–ALARMS)

NOTE:
CONTRACTOR TO MARK WIRES WITH 3/8" TAPE LABELING THE WIRE NAMES.

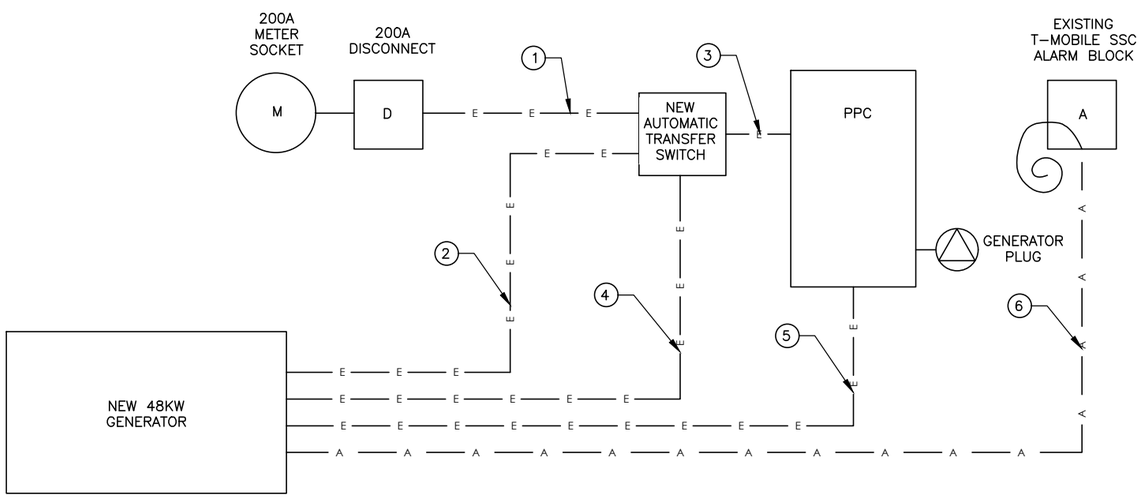

1 ONE LINE DIAGRAM AND DETAILS

SCALE: N.T.S.

VENDOR:

T-Mobile

4533 ENTERPRISE DR
OKLAHOMA CITY OK 73128

Branch COMMUNICATIONS
A SOLUTIONS PROVIDER

BRANCH COMMUNICATIONS
7335 SOUTH LEWIS AVE. STE. 300
TULSA, OKLAHOMA 74136
(918) 949–4551

PRODUCED BY:

Branch ENGINEERING LLC.
A SOLUTIONS PROVIDER

BRANCH ENGINEERING LLC
7335 SOUTH LEWIS AVE. STE. 300
TULSA, OKLAHOMA 74136
(918) 949–4551

COA. 8525 EXP. 06/30/2024

SITE NAME:
OK03XC315

SITE NUMBER:
OK01538A

SITE ADDRESS:
1800 BLK WESTMINSTER
NICHOLS HILLS OK 73120

ENGINEER:

LICENSED PROFESSIONAL ENGINEER
JEROD R DOTSON
27779
OKLAHOMA

7/14/2

PE # 27779 EXP. 12/31/2023

NO	DATE	DESCRIPTION	E
A	01/25/22	PRELIMINARY ISSUE	BI
B	02/18/22	PRELIMINARY ISSUE	BI
C	04/08/22	PRELIMINARY ISSUE	BI
0	06/03/22	CONSTRUCTION ISSUE	BI
1	07/14/22	CONSTRUCTION ISSUE	BI

SHEET TITLE:
ONE LINE DIAGRAM & DETAILS

SHEET NUMBER:	PROJECT #: OK01538A		REVISIO
E2	BY: BDH	CKD BY: BDH	1

Attachment: PC-2022-05 PACKET (5953 : T-Mobile - Special Permit Application)

T–Mobile OK Consolidation OK01538A–OK03XC315 021822.dwg – Sheet:E2 – User: Brian.Heimbach – Jul 14, 2022 – 2:39pm

GROUNDING AND CABLE NOTES:

1. T–MOBILE IS ELIMINATING THE HOME RUN GROUND WIRE FROM THE TOP AND BOTTOM BUSS BARS ON TOWER SITES. ROOFTOPS ARE STILL REQUIRED TO HAVE SECTORIZED GROUND AND #2 INSULATED GROUND WIRE, FROM SECTOR GROUNDS TO MAIN BUSS BARS AND BUILDING STEEL.
2. REMOVED INSULATORS (CHERRIES) FROM THE BUSS BARS AND GROUND TO TOWER, TOP AND BOTTOM ON TOWER SITES ONLY.
3. ALL EXPOSED GROUNDS ARE TO BE DRESSED WITH SEAL TIGHT.
4. ALL ICE BRIDGE POSTS ARE TO BE GROUNDED WITH #2 SOLID AND DRESSED IN SEAL TIGHT.
5. THE DISTANCE BETWEEN TRAPEZE HANGERS ON ICE BRIDGES IS 3'
6. THE DISTANCE BETWEEN BUTTERFLIES AND CABLE STAND–OFFS IS 3'
7. THE DISTANCE BETWEEN CONVENTIONAL AND/OR SNAP–HANGERS ON 1/2" JUMPERS SHALL BE NO MORE THAN 3' AT THE TOP AND 2' AT THE BOTTOM PER MANUFACTURER'S RECOMMENDATION.
8. NO HYBRID CABLES SHOULD TOUCH METAL OR STEEL; THE USE OF STAND–OFF BRACKETS ARE REQUIRED.
9. JUMPERS SHOULD NOT BE CURLED–UP OR COILED TO ELIMINATE SLACK.
10. GRAVEL UNDER ALL PLATFORMS IS REQUIRED.
11. HYBRID AND JUMPER LINES SHOULD BE DRESSED IN ON THE SIDE OR BOTTOM OOF T–BOOMS.

GROUNDING LEGEND

SYMBOL	DESCRIPTION
– – – – –	GROUND CONDUCTOR
■	MECHANICAL CONNECTION
▲	CADWELD CONNECTION

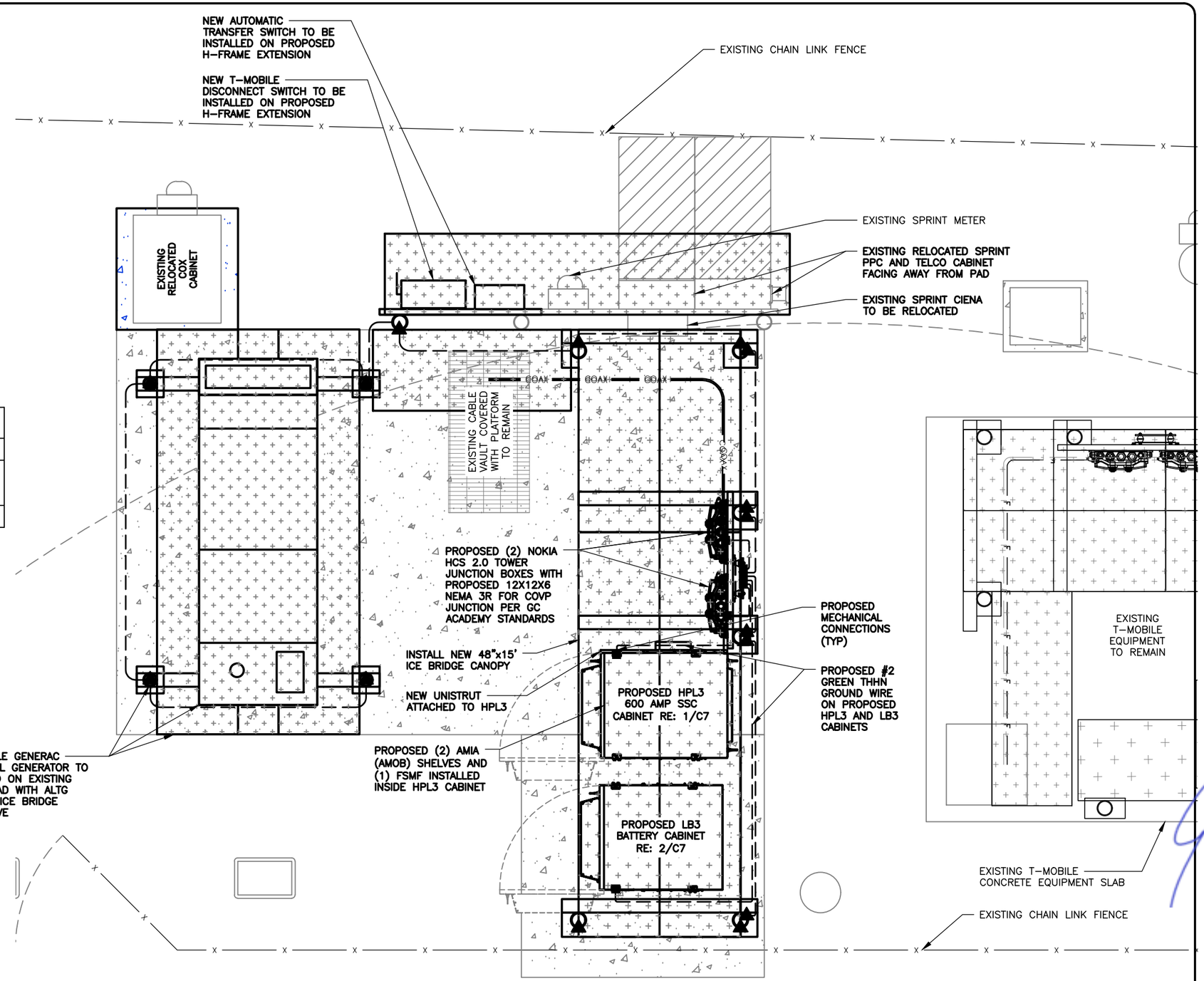

1 **EQUIPMENT GROUNDING PLAN**

SCALE: 0' 1' 5' 10'

TRUE NORTH (3.37° E) MAG

VENDOR:

T-Mobile

4533 ENTERPRISE DR
OKLAHOMA CITY OK 73128

Branch COMMUNICATIONS
A SOLUTIONS PROVIDER

BRANCH COMMUNICATIONS
7335 SOUTH LEWIS AVE. STE. 300
TULSA, OKLAHOMA 74136
(918) 949–4551

PRODUCED BY:

Branch ENGINEERING LLC.
A SOLUTIONS PROVIDER

BRANCH ENGINEERING LLC
7335 SOUTH LEWIS AVE. STE. 300
TULSA, OKLAHOMA 74136
(918) 949–4551

COA. 8525 EXP. 06/30/2024

SITE NAME:
OK03XC315

SITE NUMBER:
OK01538A

SITE ADDRESS:
1800 BLK WESTMINSTER
NICHOLS HILLS OK 73120

ENGINEER:

LICENSED PROFESSIONAL ENGINEER
JEROD R DOTSON
27779
OKLAHOMA

7/14/2

PE # 27779 EXP. 12/31/2023

NO	DATE	DESCRIPTION	B
A	01/25/22	PRELIMINARY ISSUE	BI
B	02/18/22	PRELIMINARY ISSUE	BI
C	04/08/22	PRELIMINARY ISSUE	BI
0	06/03/22	CONSTRUCTION ISSUE	BI
1	07/14/22	CONSTRUCTION ISSUE	B

SHEET TITLE: **EQUIPMENT GROUNDING PLAN**

SHEET NUMBER:	PROJECT #: OK01538A		REVISIO
G1	BY: BDH	CKD BY: BDH	1

T–Mobile OK Consolidation OK01538A–OK03XC315 021822.dwg – Sheet:G1 – User: Brian.Heimbach – Jul 14, 2022 – 2:39pm

Attachment: PC-2022-05 PACKET (5953 : T-Mobile - Special Permit Application)

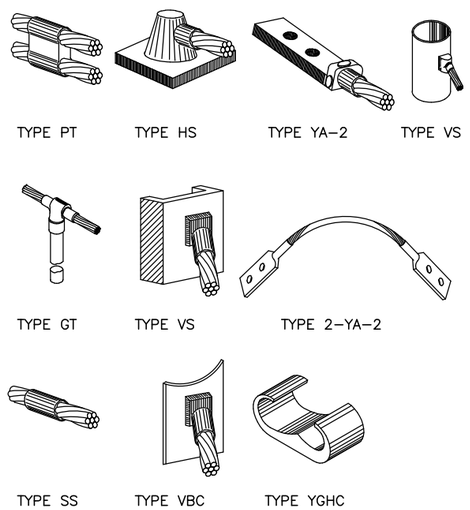

1 TYPICAL CADWELD DETAILS

SCALE: N.T.S.

NOTE:

1. CONTRACTOR TO APPLY COPPER SHIELD OR NO-OX.
2. GROUND BAR SHALL BE SIZED TO ACCOMMODATE ALL GROUNDING CONNECTIONS REQUIRED PLUS PROVIDE 50% SPARE CAPACITY.

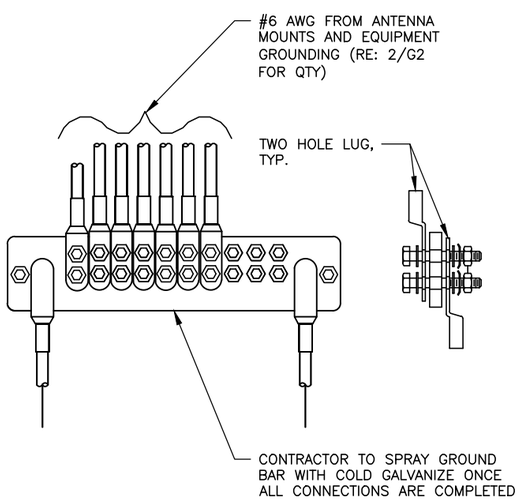

2 GROUND BAR DETAIL

SCALE: N.T.S.

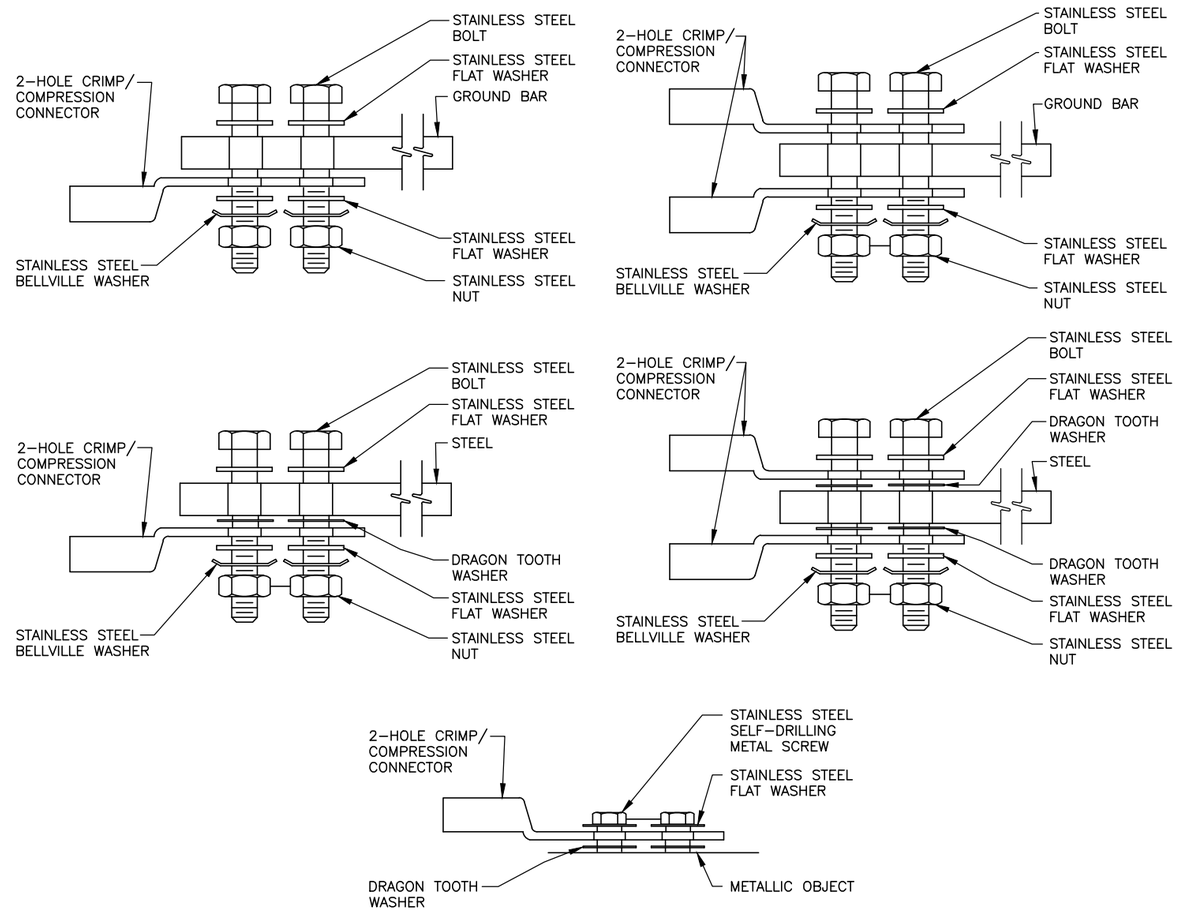

1. CHOOSE BOLT LENGTH TO ALLOW A MIN. OF THREE THREADS EXPOSED.
2. BURNISH MOUNTING SURFACE TO REMOVE PAINT IN THE AREA OF THE CONNECTOR.
3. APPLY ANTI-OXIDANT COMPOUND TO MATING SURFACE OF CONNECTOR AND WIPE OFF EXCESS COMPOUND.
4. APPLY CLEAR HEAT SHRINK OVER ENTIRE LENGTH OF LABEL FOR PROTECTION. (REFER TO CONDUCTOR LABELS SECTION.)

3 MECHANICAL CONNECTION DETAILS

SCALE: N.T.S.

VENDOR:

T-Mobile

4533 ENTERPRISE DR
OKLAHOMA CITY OK 73128

Branch COMMUNICATIONS
A SOLUTIONS PROVIDER

BRANCH COMMUNICATIONS
7335 SOUTH LEWIS AVE. STE. 300
TULSA, OKLAHOMA 74136
(918) 949-4551

PRODUCED BY:

Branch ENGINEERING LLC.
A SOLUTIONS PROVIDER

BRANCH ENGINEERING LLC
7335 SOUTH LEWIS AVE. STE. 300
TULSA, OKLAHOMA 74136
(918) 949-4551

COA. 8525 EXP. 06/30/2024

SITE NAME:
OK03XC315

SITE NUMBER:
OK01538A

SITE ADDRESS:
1800 BLK WESTMINSTER
NICHOLS HILLS OK 73120

ENGINEER:

LICENSED PROFESSIONAL ENGINEER
JEROD R DOTSON
27779
OKLAHOMA
7/14/2

PE # 27779 EXP. 12/31/2023

NO	DATE	DESCRIPTION	B
A	01/25/22	PRELIMINARY ISSUE	BI
B	02/18/22	PRELIMINARY ISSUE	BI
C	04/08/22	PRELIMINARY ISSUE	BI
0	06/03/22	CONSTRUCTION ISSUE	BI
1	07/14/22	CONSTRUCTION ISSUE	B

SHEET TITLE:
GROUNDING DETAILS

SHEET NUMBER:	PROJECT #: OK01538A		REVISIO
G2	BY: BDH	CKD BY: BDH	1

T-Mobile OK Consolidation OK01538A-OK03XC315 021822.dwg - Sheet:G2 - User: Brian.Heimbach - Jul 14, 2022 - 2:39pm

5.d.a
Attachment: PC-2022-05 PACKET (5953 : T-Mobile - Special Permit Application)

GROUNDING PLAN NOTES:

1. FOR ACTUAL ORIENTATION OF GENERATOR, EQUIPMENT PAD, FENCE, TOWER, & U/G POWER/TELCO CONDUITS SEE SHEET C-1.
2. VERIFY QTY., LENGTH, TYPE, & CONFIGURATION OF GROUND RODS TO ENSURE SYSTEM PROVIDES GROUND RESISTANCE OF 5 OHMS OR LESS.

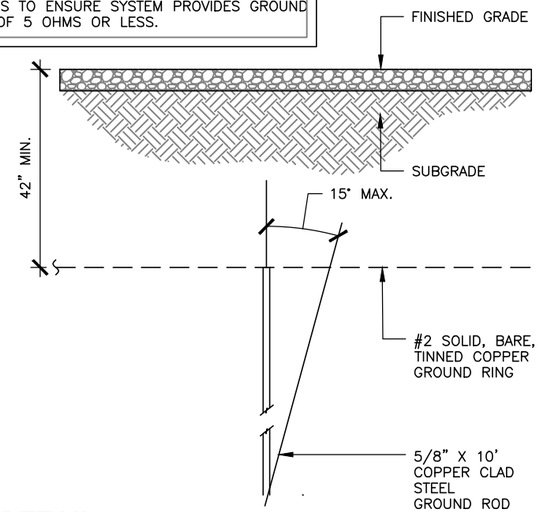

1 GROUND ROD DETAIL
SCALE: N.T.S.

EQUIPMENT PAD GROUNDING NOTES:

1. CONNECTION SHALL BE COVERED BY NO LESS THAN 2" OF CONCRETE.
2. ATTEMPT TO MAKE CONNECTION TO A 6'-0" RUN OF REBAR OR GREATER.
3. APPLY HEAT SHRINK OR ELECTRICAL TAPE AROUND THE CONDUCTOR TO AVOID CORROSION.

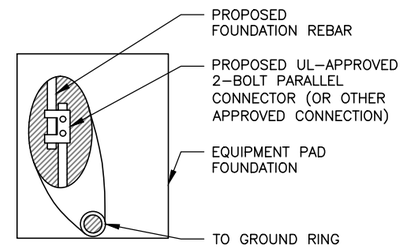

2 EQUIPMENT PAD GROUNDING
SCALE: N.T.S.

AUTOMATIC TRANSFER SWITCH NOTE:

PROVIDE BONDING JUMPERS AS NECESSARY PER NEC SECTION 250.

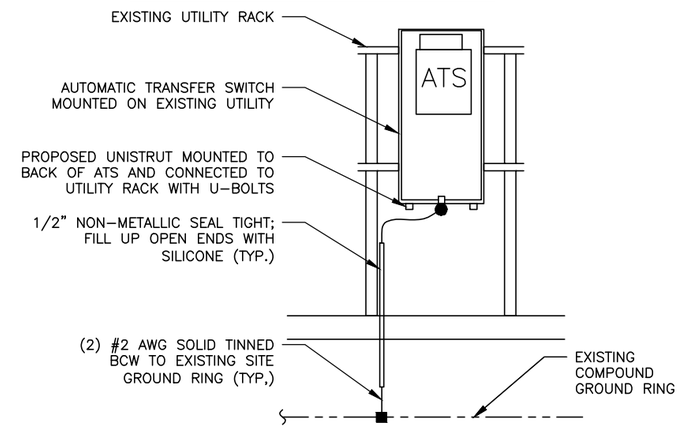

3 AUTOMATIC TRANSFER SWITCH GROUNDING
SCALE: N.T.S.

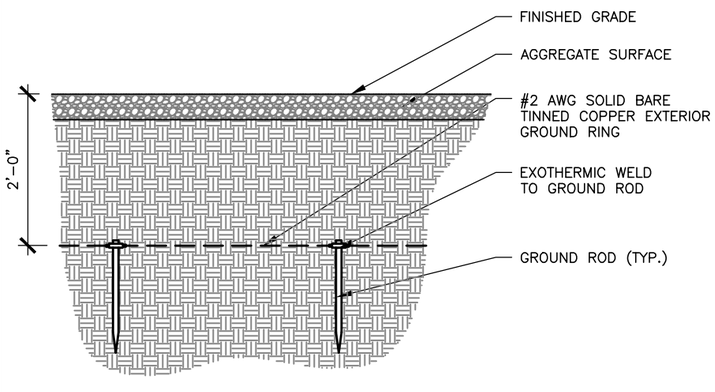

4 GROUND RING DETAIL
SCALE: N.T.S.

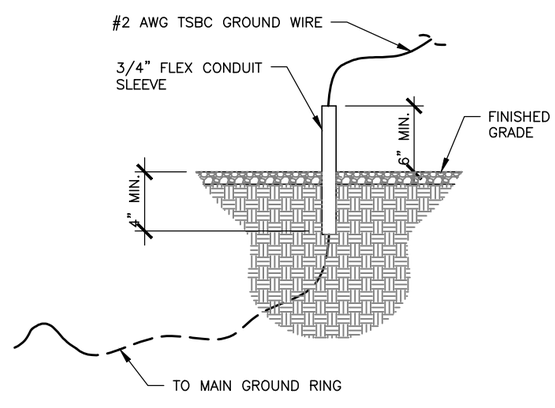

5 STUB UP DETAIL
SCALE: N.T.S.

GENERATOR NOTE:

1. CADWELD CONNECTION FOR GROUNDING CONDUCTORS BETWEEN PROPOSED AND EXISTING SECTIONS OF FENCE.
2. GENERATOR SYSTEM SHALL BE SOLIDLY GROUNDED PER NEC 250.20.
3. GROUND WIRE TO BE IN NON-METALLIC SEAL TIGHT. GC TO FILL UP OPEN ENDS WITH SILICONE.

LEGEND:

- ● MECHANICAL CONNECTION
- ■ EXOTHERMIC CONNECTION

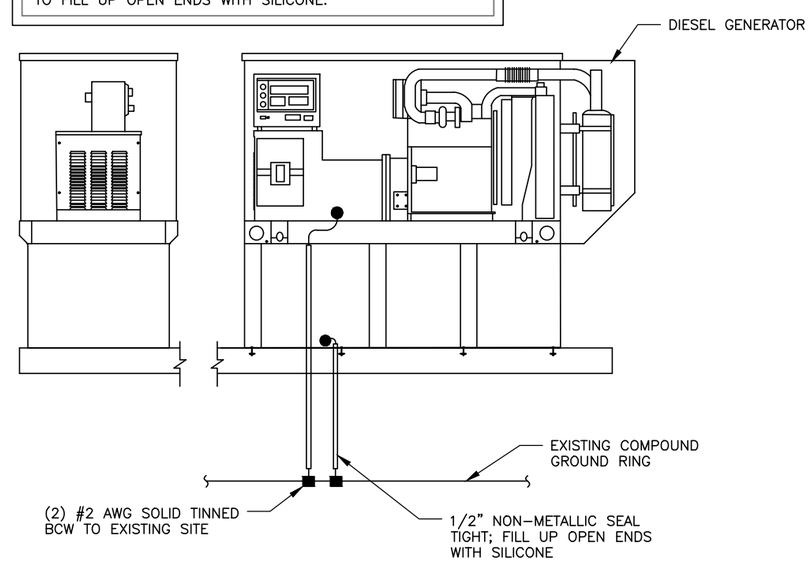

6 GENERATOR ELEVATION
SCALE: N.T.S.

VENDOR:

T-Mobile
4533 ENTERPRISE DR
OKLAHOMA CITY OK 73128

Branch COMMUNICATIONS
A SOLUTIONS PROVIDER
BRANCH COMMUNICATIONS
7335 SOUTH LEWIS AVE. STE. 300
TULSA, OKLAHOMA 74136
(918) 949-4551

PRODUCED BY:

Branch ENGINEERING LLC.
A SOLUTIONS PROVIDER
BRANCH ENGINEERING LLC
7335 SOUTH LEWIS AVE. STE. 300
TULSA, OKLAHOMA 74136
(918) 949-4551

COA. 8525 EXP. 06/30/2024

SITE NAME:
OK03XC315

SITE NUMBER:
OK01538A

SITE ADDRESS:
1800 BLK WESTMINSTER
NICHOLS HILLS OK 73120

ENGINEER:

LICENSED PROFESSIONAL ENGINEER
JEROD R DOTSON
27779
OKLAHOMA

7/14/2

PE # 27779 EXP. 12/31/2023

NO	DATE	DESCRIPTION	B
A	01/25/22	PRELIMINARY ISSUE	BI
B	02/18/22	PRELIMINARY ISSUE	BI
C	04/08/22	PRELIMINARY ISSUE	BI
0	06/03/22	CONSTRUCTION ISSUE	BI
1	07/14/22	CONSTRUCTION ISSUE	BI

SHEET TITLE:
GROUNDING DETAILS

SHEET NUMBER:	PROJECT #: OK01538A		REVISIO
G3	BY: BDH	CKD BY: BDH	1

T-Mobile OK Consolidation OK01538A-OK03XC315 021822.dwg - Sheet:G3 - User: Brian.Heimbach - Jul 14, 2022 - 2:39pm

Attachment: PC-2022-05 PACKET (5953 : T-Mobile - Special Permit Application)

Date: **May 11, 2022**

Brittany Manley
Branch Communications, Inc.
7335 S. Lewis Ave, Ste 300
Tulsa, OK 74136

SMW Engineering Group, Inc.
158 Business Center Dr.
Birmingham, AL 35244
(205) 252-6985

Subject:	**Structural PE Letter**	
Carrier Designation:	***T-Mobile* Equipment Change-out** **Carrier Site Name/Number:**	OK01538A
Engineering Firm Designation:	**SMW Engineering Group, Inc. Project Number:**	21-1188
Site Data:	**1800 Westminster Place, Nichols Hills, OK 73120 (Oklahoma County)** **Latitude *35.5587°*, Longitude *-97.558°*** **124'-0" Water Tank**	

Dear Brittany Manley,

SMW Engineering Group, Inc. is pleased to submit this **"Structural PE Letter"** to determine the structural integrity of the above-mentioned structure.

The purpose of the assessment is to determine acceptability of the structure to sufficiently support the telecommunications equipment presented in this report. Based on our professional opinion we have determined the suitability for the structure, under the following load case, to be:

Proposed Equipment Configuration **Sufficient Capacity**

This assessment was performed in accordance with the 2018 International Building Code, based upon an ultimate 3-second gust wind speed of 109 mph. Applicable Standard references and design criteria are listed in Section 2 - Analysis Criteria.

All equipment proposed in this report shall be installed in accordance with the associated drawings for the determined available structural capacity to be effective.

We at *SMW Engineering Group, Inc.* appreciate the opportunity of providing our continuing professional services to you. If you have any questions or need further assistance on this or any other projects, please give us a call.

Respectfully submitted by:

Jeremy Sharit, P.E.
Project Engineer
OK CA #5140 PE

Attachment: PC-2022-05 PACKET (5953 : T-Mobile - Special Permit Application)

TABLE OF CONTENTS

1) INTRODUCTION

2) ASSESSMENT CRITERIA
Table 1 - Proposed Equipment Configuration

3) ASSESSMENT PROCEDURE
Table 2 - Documents Provided
3.1) Assumptions

4) ASSESSMENT RESULTS

Attachment: PC-2022-05 PACKET (5953 : T-Mobile - Special Permit Application)

1) INTRODUCTION

The telecommunications equipment will be on existing mounts on top of a water tank. There is existing telecommunications equipment on the mounts now. See the table below for the final equipment configuration.

2) ASSESSMENT CRITERIA

Building Code:	2018 IBC
TIA-222 Revision:	TIA-222-H
Risk Category:	II
Ultimate Wind Speed:	109 mph
Exposure Category:	C
Topographic Factor:	1
Ice Thickness:	1.5 in
Wind Speed with Ice:	30 mph
Service Wind Speed:	60 mph

Table 1 - Proposed Equipment Configuration

Mounting Level (ft)	Center Line Elevation (ft)	Number of Antennas	Antenna Manufacturer	Antenna Model	Number of Feed Lines	Feed Line Size (in)
131.0	134.0	3	Commscope	FFVV-65C-R3-V1	2	HCS 2.0 Trunk
		3	Nokia	AEHC		
		3	Nokia	AHFIG		
		3	Nokia	AHLOA		
		2	Nokia	HCS 2.0 Breakout Feature		
		3	-	Sector Mount		

3) ASSESSMENT PROCEDURE

Table 2- Documents Provided

Document	Remarks	Reference
RFDS	T-Mobile	Dated 03/17/22
Construction Drawings	Branch Communications, Inc.	-
Mount Analysis Report	SMW Engineering Group, Inc.	-

3.1) Assumptions

1) The structure was built in accordance with the designer's specifications.
2) The structure has been maintained and is free of damage.
3) The configuration of antennas, transmission cables, mounts and other appurtenances are as specified in Table 1.

This assessment may be affected if any assumptions are not valid or have been made in error. SMW Engineering should be notified to determine the effect on the structural integrity of the structure.

Attachment: PC-2022-05 PACKET (5953 : T-Mobile - Special Permit Application)

4) ASSESSMENT RESULTS

It is our assessment that the water tank **will support** the proposed equipment configuration. This is based on past performance and that the proposed equipment configuration will only slightly increase the wind area and weight of appurtenances being applied, which poses no significant change in impact when compared to the size of the structure. Therefore, the structure is deemed **adequate**. Analysis of the antenna mounts is based on the associated Mount Analysis Report.

Attachment: PC-2022-05 PACKET (5953 : T-Mobile - Special Permit Application)

Water tank located at 1800 Westminster Place, Nichols Hills, OK 73120
LAT: 35.558651
LONG: -97.558102

Attachment: PC-2022-05 PACKET (5953 : T-Mobile - Special Permit Application)

Larry Stein
Oklahoma County Assessor's Office

Ownership Radius Report

This Non-Official Report is for Account Number R169842520 and is a 300-foot radius from the outside of the polygon. If the minimum number of different owners was not reached it was extended by 100-foot increments until the required number of different owners was reached, or the maximum distance was reached. This report does not constitute a legal survey or document, for definitive description of real property and ownership; consult the deeds recorded in the Oklahoma County Clerks Office. Official Record of this Certified Radius Report will expire 30 days from the date of creation stamped on the back of this sheet.

Attachment: PC-2022-05 PACKET (5953 : T-Mobile - Special Permit Application)

STATE OF OKLAHOMA }
COUNTY OF OKLA } ss:

I, the duly elected, qualified and acting County Assessor, in and for the County and State aforesaid, do hereby certify that the within and foregoing is a full, true and complete copy of 300 ft radius Report filed in the office of the County Assessor on the 6 day of June, 2022

Given under my hand and official seal this 6 day of June, 2022

County Assessor

G. Hanby Deputy

Attachment: PC-2022-05 PACKET (5953 : T-Mobile - Special Permit Application)

Oklahoma County Assessor's
300ft Radius Report
6/6/2022

accountno	name1	name2	mailingaddress1	Shape	city	state	zipcode	subname	block	lot	legal	location
R169843315	TODD KIMBERLY STONE		1724 DRAKESTONE AVE		NICHOLS HILLS	OK	73120-1010	NICHOLS HILLS WILSHIRE	109	000	NICHOLS HILLS WILSHIRE 109 000 LOTS 42 & 43	1724 DRAKESTONE AVE NICHOLS HILLS
R169843290	MARKOFF DANIEL P		9211 LAKE HEFNER PKWY STE 104		OKLAHOMA CITY	OK	73120-6501	NICHOLS HILLS WILSHIRE	109	000	NICHOLS HILLS WILSHIRE 109 000 LOTS 38 THRU 41	1722 DRAKESTONE AVE NICHOLS HILLS
R169842015	STONE R SPENCER & HIARIE G		1800 DRAKESTONE AVE		NICHOLS HILLS	OK	73120-4716	NICHOLS HILLS WILSHIRE	106	000	NICHOLS HILLS WILSHIRE 106 000 LOTS 1 & 2	1800 DRAKESTONE AVE NICHOLS HILLS
R169842040	JOHNSON BRADLEY J		1802 DRAKESTONE AVE		NICHOLS HILLS	OK	73120	NICHOLS HILLS WILSHIRE	106	000	NICHOLS HILLS WILSHIRE 106 000 ALL LOTS 3 4 5 & E15FT LOT 6	1802 DRAKESTONE AVE NICHOLS HILLS
R169842045	SIMMS BRIAN M		1804 DRAKESTONE AVE		OKLAHOMA CITY	OK	73160	NICHOLS HILLS WILSHIRE	106	000	NICHOLS HILLS WILSHIRE 106 000 W10FT OF LOT 6 ALL 7 8 9 & E15FT OF LOT 10	1804 DRAKESTONE AVE NICHOLS HILLS
R169842875	ROSENBERG ERIC	ROSENBERG DEVON	1801 DRAKESTONE AVE		NICHOLS HILLS	OK	73120	NICHOLS HILLS WILSHIRE	107	073	NICHOLS HILLS WILSHIRE 107 073	1801 DRAKESTONE AVE NICHOLS HILLS
R169844475	CLIFTON ROSS & BONNIE		1723 DRAKESTONE AVE		NICHOLS HILLS	OK	73120-1009	NICHOLS HILLS WILSHIRE	112	000	NICHOLS HILLS WILSHIRE 112 000 LOTS 18 & 19	1723 DRAKESTONE AVE NICHOLS HILLS
R169842855	HERRITT ROBERT M	HERRITT BRITTANY T	1803 DRAKESTONE AVE		OKLAHOMA CITY	OK	73120	NICHOLS HILLS WILSHIRE	107	000	NICHOLS HILLS WILSHIRE 107 000 ALL LOT 69 EX BEG SW/C LT 69 TH E2.7FT NLY55.80FT NWLY34FT TO A PT 1.6FT E OF W LINE LT 69 TH NWLY TO NW/C LT 69 SLY164.27FT TO BEG PLUS ALL LOTS 70 71 72	1803 DRAKESTONE AVE NICHOLS HILLS
R169842835	BUCKLER WILLIAM BRYAN & ROBIN		1805 DRAKESTONE AVE		NICHOLS HILLS	OK	73120	NICHOLS HILLS WILSHIRE	107	000	NICHOLS HILLS WILSHIRE 107 000 ALL LOTS 65 66 67 68 & PT LOT 69 BEG SW/C SD LOT 69 TH E2.70FT NE55.80FT TO A POINT 2.70FT E OF W LINE SD LOT NWLY 34FT TO A POINT 1.60FT E OF W LINE SD LOT NWLY TO NW/C	1805 DRAKESTONE AVE NICHOLS HILLS
R169842815	COOPER CODY J	COOPER LAUREN R	1807 DRAKESTONE AVE		NICHOLS HILLS	OK	73120	NICHOLS HILLS WILSHIRE	107	000	NICHOLS HILLS WILSHIRE 107 000 LOTS 61 62 63 & 64	1807 DRAKESTONE AVE NICHOLS HILLS
R169844485	BENNETT MARK H & LAURIE A		1721 DRAKESTONE AVE		NICHOLS HILLS	OK	73120-1009	NICHOLS HILLS WILSHIRE	112	000	NICHOLS HILLS WILSHIRE 112 000 ALL LOTS 20 21 22 & 23 EX BEG SE/C LT 23 TH N TO NE/C W5FT TH S TO BEG	1721 DRAKESTONE AVE NICHOLS HILLS
R169844505	GAMBLE CHARLES D JR		1719 DRAKESTONE AVE		NICHOLS HILLS	OK	73120-1009	NICHOLS HILLS WILSHIRE	112	000	NICHOLS HILLS WILSHIRE 112 000 A STRIP BEG AT SE/C LOT 23 N TO NE/C W5FT S TO BEG & ALL LOTS 24 THRU 26 W15FT LOT 27	1719 DRAKESTONE AVE NICHOLS HILLS
R169842520	KRAKER PATRICIA T		1800 WESTMINSTER PL		OKLAHOMA CITY	OK	73120-4702	NICHOLS HILLS WILSHIRE	107	001	NICHOLS HILLS WILSHIRE 107 001	1800 WESTMINSTER PL NICHOLS HILLS
R169842525	DERR DANIEL	DERR ROSEMARY	9615 N BROADWAY EXT		OKLAHOMA CITY	OK	73114	NICHOLS HILLS WILSHIRE	107	002	NICHOLS HILLS WILSHIRE 107 002	1802 WESTMINSTER PL NICHOLS HILLS

Oklahoma County Assessor's
300ft Radius Report
6/6/2022

R169842530	LAWP INVESTMENTS LLC		PO BOX 20787		OKLAHOMA CITY	OK	73156	NICHOLS HILLS WILSHIRE	107	003	NICHOLS HILLS WILSHIRE 107 003	1804 WESTMINSTER PL NICHOLS HILLS
R169842535	RODGERS JENNIFER S		1806 WESTMINSTER PL		NICHOLS HILLS	OK	73120-4702	NICHOLS HILLS WILSHIRE	107	004	NICHOLS HILLS WILSHIRE 107 004	1806 WESTMINSTER PL NICHOLS HILLS
R169842540	VOTH KENNETH C & JOAN S		2828 KENT DR		OKLAHOMA CITY	OK	73120-2907	NICHOLS HILLS WILSHIRE	107	005	NICHOLS HILLS WILSHIRE 107 005	1808 WESTMINSTER PL NICHOLS HILLS
R169842545	NORDYKE CINDY ANN TRS	NORDYKE CINDY ANN REV TRUST	1810 WESTMINSTER PL		OKLAHOMA CITY	OK	73120	NICHOLS HILLS WILSHIRE	107	006	NICHOLS HILLS WILSHIRE 107 006	1810 WESTMINSTER PL NICHOLS HILLS
R169844470	LOWER CHRISTOPHER A & LAVERYL TRS	LOWER FAMILY TRUST	1732 WESTMINSTER PL		OKLAHOMA CITY	OK	73120-1002	NICHOLS HILLS WILSHIRE	112	017	NICHOLS HILLS WILSHIRE 112 017	1732 WESTMINSTER PL NICHOLS HILLS
R169844465	BROWN GUY L	MORRIS BRENDA JO	1730 WESTMINSTER PL		OKLAHOMA CITY	OK	73120-1002	NICHOLS HILLS WILSHIRE	112	016	NICHOLS HILLS WILSHIRE 112 016	1730 WESTMINSTER PL NICHOLS HILLS
R169844460	FREEDE JANET C TRS	FREEDE JANET TRUST	1728 WESTMINSTER PL		OKLAHOMA CITY	OK	73120-1002	NICHOLS HILLS WILSHIRE	112	015	NICHOLS HILLS WILSHIRE 112 015	1728 WESTMINSTER PL NICHOLS HILLS
R169844455	KNIGHT SODDEE R	KNIGHT KETURAH Y	11900 N PENNSYLVANIA AVE STE A 10		OKLAHOMA CITY	OK	73120	NICHOLS HILLS WILSHIRE	112	014	NICHOLS HILLS WILSHIRE 112 014	1726 WESTMINSTER PL NICHOLS HILLS
R169844755	MORRIS AUSTIN		1727 WESTMINSTER PL		NICHOLS HILLS	OK	73120	NICHOLS HILLS WILSHIRE	113	014	NICHOLS HILLS WILSHIRE 113 014	1727 WESTMINSTER PL NICHOLS HILLS
R169844760	MJH PROPERTIES LLC		PO BOX 82098		OKLAHOMA CITY	OK	73148-0098	NICHOLS HILLS WILSHIRE	113	015	NICHOLS HILLS WILSHIRE 113 015	1729 WESTMINSTER PL NICHOLS HILLS
R169844765	DRAKESTONE REAL ESTATE INVESTMENTS LLC		1723 DORCHESTER DR		OKLAHOMA CITY	OK	73120	NICHOLS HILLS WILSHIRE	113	016	NICHOLS HILLS WILSHIRE 113 016	1731 WESTMINSTER PL NICHOLS HILLS
R169844770	TURK HERBERT A JR		1733 WESTMINSTER PL		NICHOLS HILLS	OK	73120-1001	NICHOLS HILLS WILSHIRE	113	017	NICHOLS HILLS WILSHIRE 113 017	1733 WESTMINSTER PL NICHOLS HILLS
R169842910	MCFARLAND GREG	CASHMAN SHELBY	1813 WESTMINSTER PL		NICHOLS HILLS	OK	73120	NICHOLS HILLS WILSHIRE	108	007	NICHOLS HILLS WILSHIRE 108 007	1813 WESTMINSTER PL NICHOLS HILLS
R169842905	BAF 1 LLC		5001 PLAZA ON THE LAKE, Unit 200		AUSTIN	TX	78746	NICHOLS HILLS WILSHIRE	108	006	NICHOLS HILLS WILSHIRE 108 006	1811 WESTMINSTER PL NICHOLS HILLS
R169842900	MCKEE SIERRA		1809 WESTMINSTER PL		OKLAHOMA CITY	OK	73120-4701	NICHOLS HILLS WILSHIRE	108	005	NICHOLS HILLS WILSHIRE 108 005	1809 WESTMINSTER PL NICHOLS HILLS
R169842895	CLARK PAUL M		1807 WESTMINSTER PL		OKLAHOMA CITY	OK	73120-4701	NICHOLS HILLS WILSHIRE	108	004	NICHOLS HILLS WILSHIRE 108 004	1807 WESTMINSTER PL NICHOLS HILLS
R169842890	HARRISON CANDICE D	HARRISON D ANN	1805 WESTMINSTER PL		OKLAHOMA CITY	OK	73120-4701	NICHOLS HILLS WILSHIRE	108	003	NICHOLS HILLS WILSHIRE 108 003	1805 WESTMINSTER PL NICHOLS HILLS

Oklahoma County Assessor's
300ft Radius Report
6/6/2022

R169842885	BAILEY B A		6608 N WESTERN AVE, Unit 216		OKLAHOMA CITY	OK	73116	NICHOLS HILLS WILSHIRE	108	002	NICHOLS HILLS WILSHIRE 108 002	1803 WESTMINSTER PL NICHOLS HILLS
R169842880	PUJARI GANGA	PUJARI GITA	1801 WESTMINSTER PL		NICHOLS HILLS	OK	73120-4701	NICHOLS HILLS WILSHIRE	108	001	NICHOLS HILLS WILSHIRE 108 001	1801 WESTMINSTER PL NICHOLS HILLS
R179644070	VILLAGE TEN INVESTMENTS LLC		1914 HUNTINGTON AVE		NICHOLS HILLS	OK	73116-5506	VILLAGE SECOND ADD	147	018	VILLAGE SECOND ADD 147 018	1734 WESTCHESTER DR VILLAGE
R179644080	VILLAGE TEN INVESTMENTS LLC		1914 HUNTINGTON AVE		NICHOLS HILLS	OK	73116-5506	VILLAGE SECOND ADD	147	019	VILLAGE SECOND ADD 147 019	1736 WESTCHESTER DR VILLAGE
R179644090	BASHANT RONALD L	DEARMOND MICHAEL E	1738 WESTCHESTER DR		OKLAHOMA CITY	OK	73120-1127	VILLAGE SECOND ADD	147	020	VILLAGE SECOND ADD 147 020	1738 WESTCHESTER DR VILLAGE
R179583620	SVE INVESTMENTS LLC		912 NW 15TH ST		OKLAHOMA CITY	OK	73106-6608	VILLAGE EXTENDED	146	001	VILLAGE EXTENDED 146 001	1800 WESTCHESTER DR VILLAGE
R179583630	LEE LEWIS E & LOIS M		1804 WESTCHESTER DR		OKLAHOMA CITY	OK	73120-1129	VILLAGE EXTENDED	146	002	VILLAGE EXTENDED 146 002	1804 WESTCHESTER DR VILLAGE
R179583640	HANEY DAVID J & CYNTHIA TRS	HANEY DAVID & CYNTHIA LIVING TRUST	509 NW 17TH ST		OKLAHOMA CITY	OK	73103-2113	VILLAGE EXTENDED	146	003	VILLAGE EXTENDED 146 003	1808 WESTCHESTER DR VILLAGE
R179583650	ALLEN GREG		3921 NW 44TH ST		OKLAHOMA CITY	OK	73112-2517	VILLAGE EXTENDED	146	004	VILLAGE EXTENDED 146 004	1812 WESTCHESTER DR VILLAGE
R179583660	SCHELL LARRY D & JEANIE TRS	SCHELL FAMILY TRUST	11515 HILLSDALE DR		EDMOND	OK	73013-0465	VILLAGE EXTENDED	146	005	VILLAGE EXTENDED 146 005	1816 WESTCHESTER DR VILLAGE
R179583670	CASTILLO JOSEPH	CASTILLO ANTOINETTE D	1820 WESTCHESTER DR		OKLAHOMA CITY	OK	73120	VILLAGE EXTENDED	146	006	VILLAGE EXTENDED 146 006	1820 WESTCHESTER DR VILLAGE
R179583680	RAMIREZ ALBERT G		1824 WESTCHESTER DR		OKLAHOMA CITY	OK	73120-1129	VILLAGE EXTENDED	146	007	VILLAGE EXTENDED 146 007	1824 WESTCHESTER DR VILLAGE

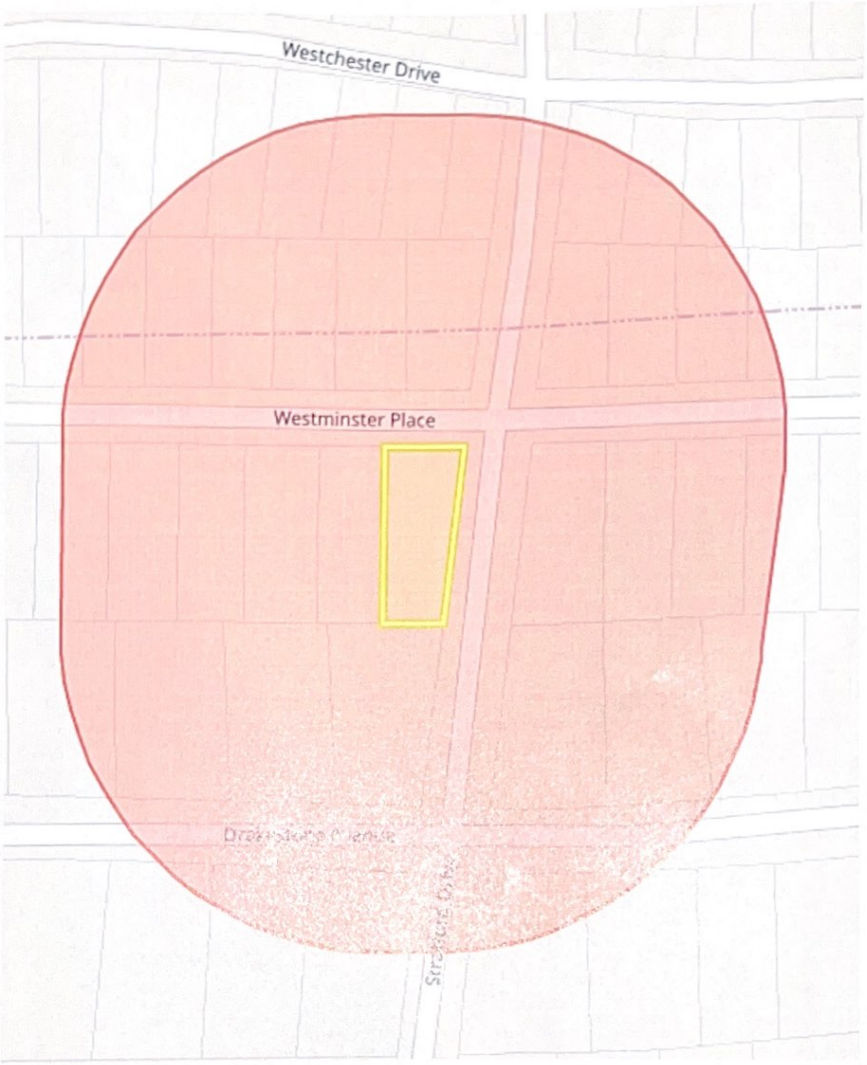

Monday, June 6, 2022 9:16:21 AM - Window

Attachment: PC-2022-05 PACKET (5953 : T-Mobile - Special Permit Application)